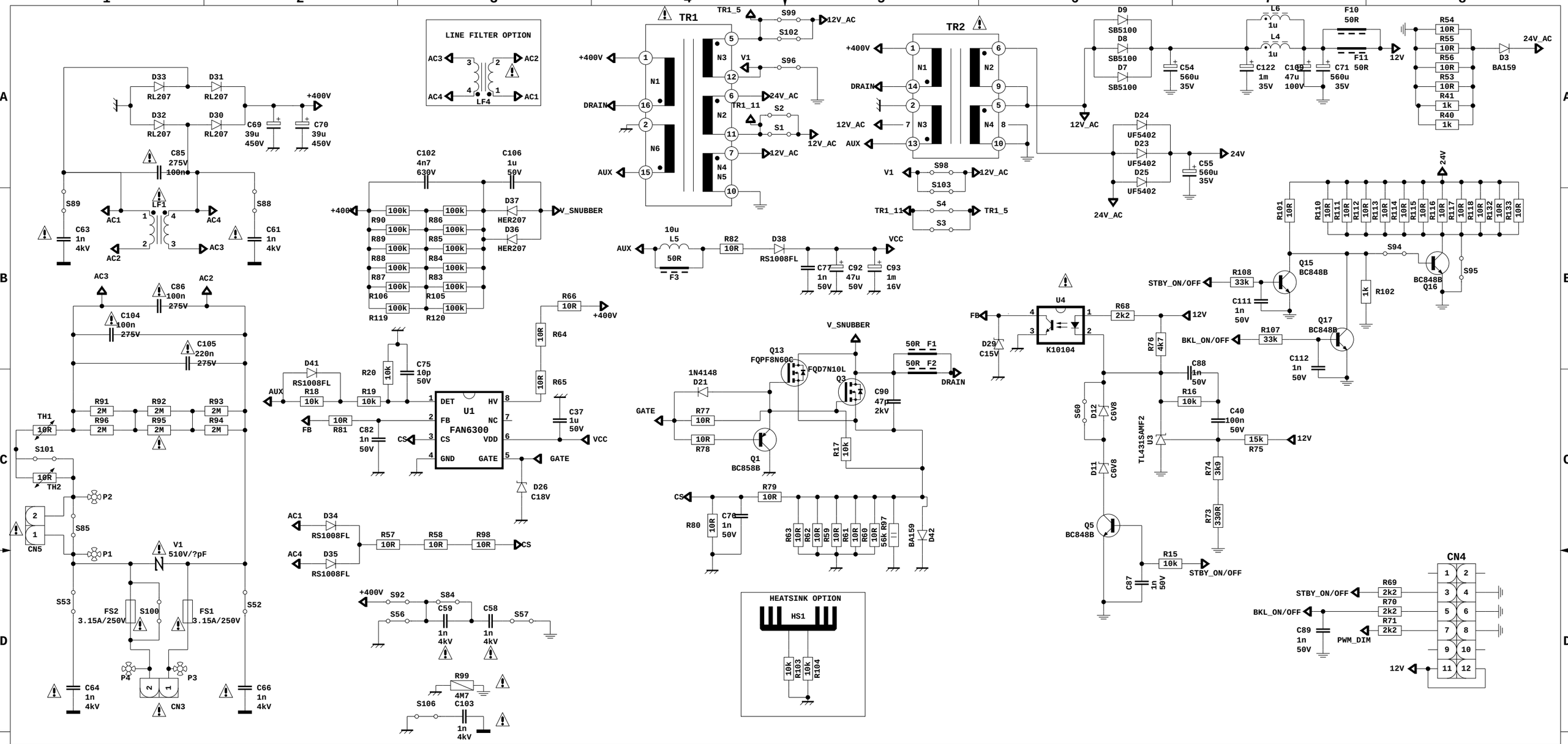

CONVERTER BLOCK

VESTEL	PROJECT NAME : 17ips62-r4		A3
SCH NAME :1		T. SHT 1	
DRAWN BY :<YOUR NAME HERE>		01-04-2016_09:40	