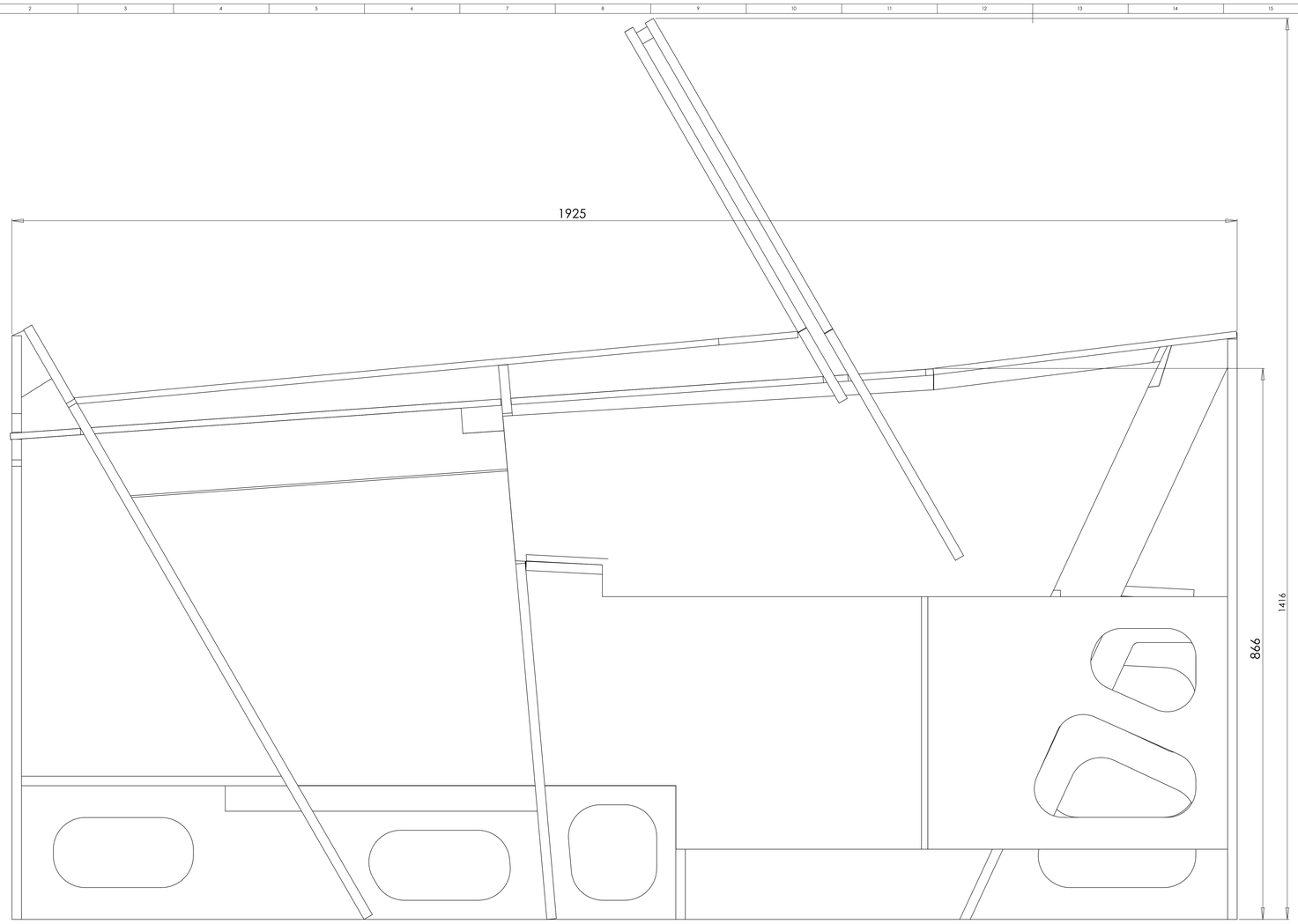

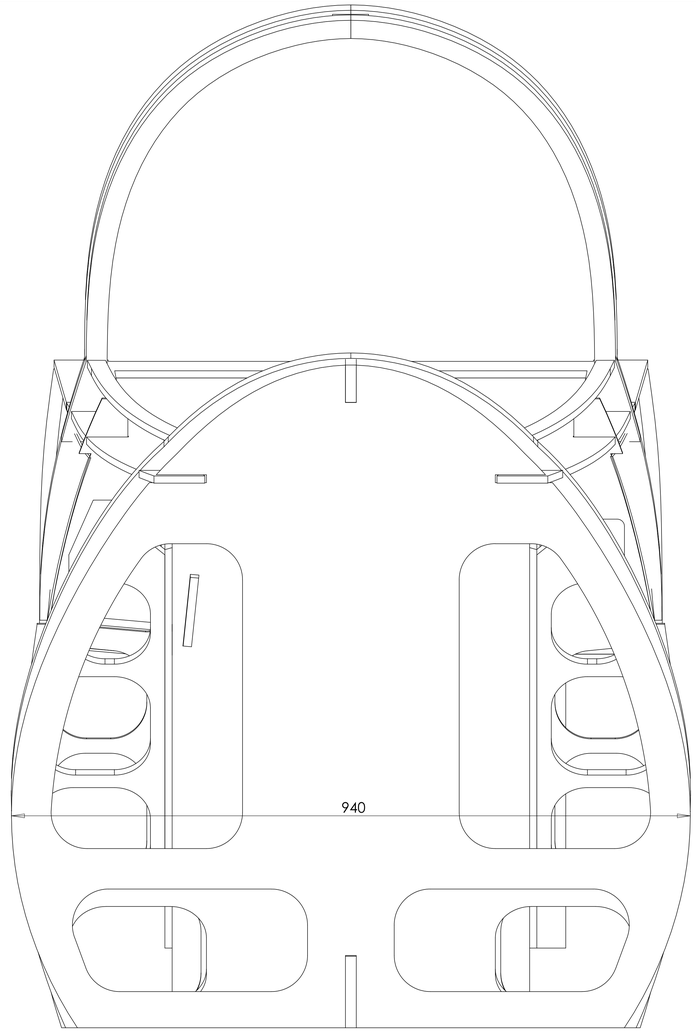

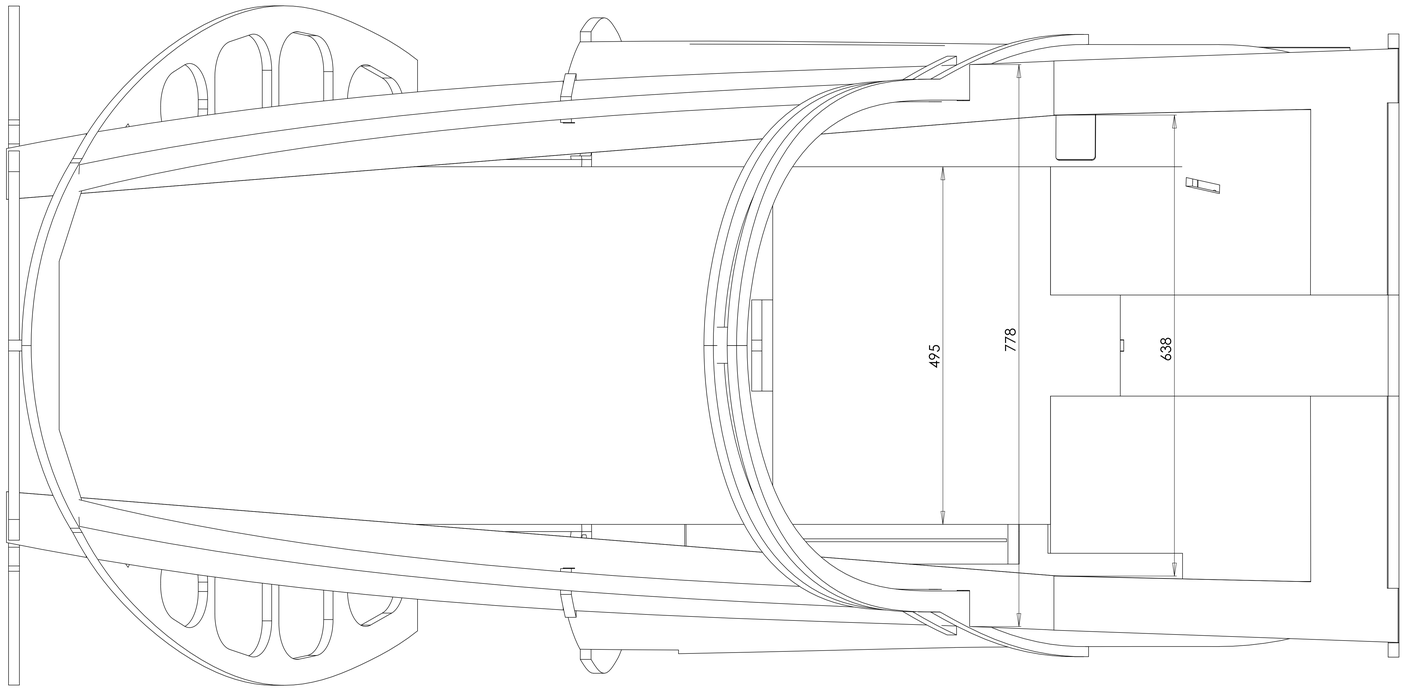

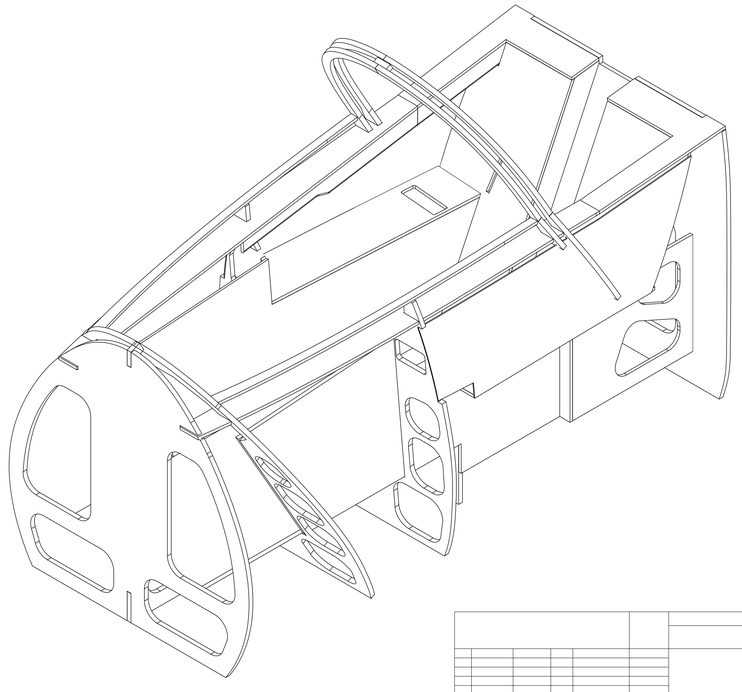

1-Ossature-2000

A0

SHEET 1 OF 1