9.2 Power Board
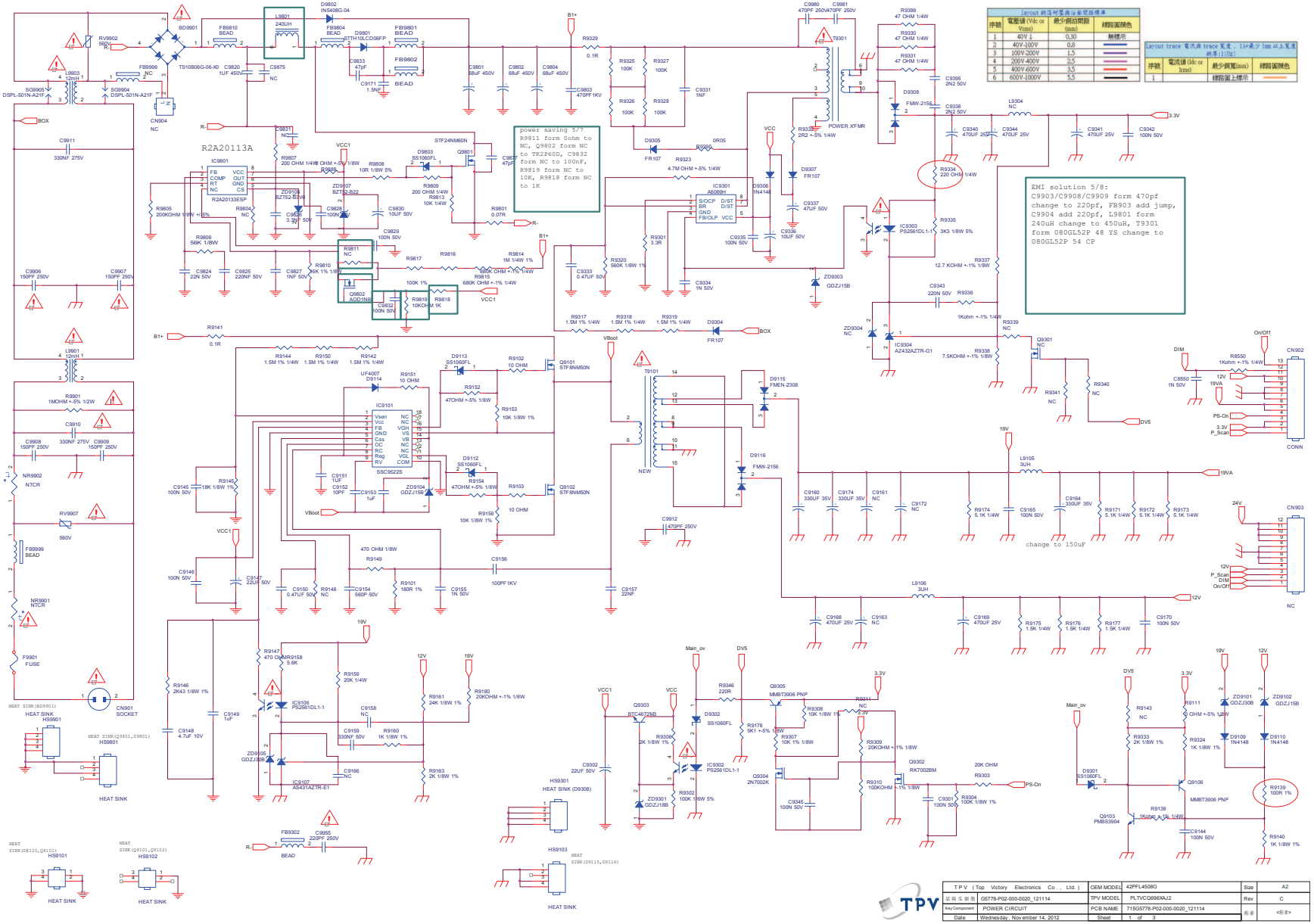
715G5778P03W21002M