STEREO RECEIVER

RX-V470

SERVICE MANUAL

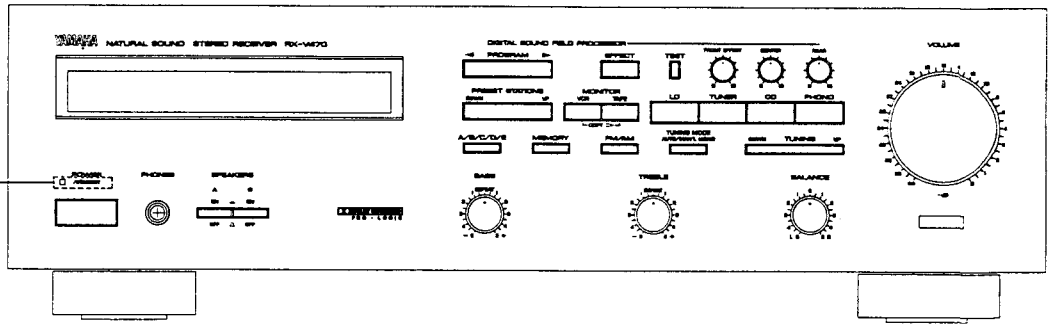

G model only

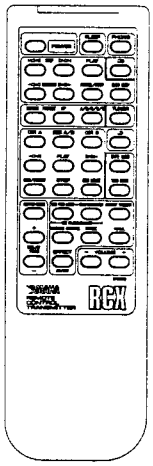

IMPORTANT NOTICE

This manual has been provided for the use of authorized YAMAHA Retailers and their service personnel.
It has been assumed that basic service procedures inherent to the industry, and more specifically YAMAHA Products, are already known and understood by the users, and have therefore not been restated.

WARNING: Failure to follow appropriate service and safety procedures when servicing this product may result in personal injury, destruction of expensive components, and failure of the product to perform as specified. For these reasons, we advise all YAMAHA product owners that any service required should be performed by an authorized YAMAHA Retailer or the appointed service representative.

IMPORTANT: The presentation or sale of this manual to any individual or firm does not constitute authorization, certification or recognition of any applicable technical capabilities, or establish a principle-agent relationship of any form.

The data provided is believed to be accurate and applicable to the unit(s) indicated on the cover. The reseach, engineering, and service departments of YAMAHA are continually striving to improve YAMAHA products. Modifications are, therefore, inevitable and specifications are subject to change without notice or obligation to retrofit. Should any discrepancy appear to exist, please contact the distributor's Service Division.

WARNING: Static discharges can destroy expensive components. Discharge any static electricity your body may have accumulated by grounding yourself to the ground buss in the unit (heavy gauge black wires connect to this buss).

IMPORTANT: Turn the unit OFF during disassembly and part replacement. Recheck all work before you apply power to the unit.

■ CONTENTS

TO SERVICE PERSONNEL 1
REAR PANELS ..... 1~2
SPECIFICATIONS ..... 3~4
INTERNAL VIEW 4
DISASSEMBLY PROCEDURES 5
ADJUSTMENTS ..... 5~9
TEST SIGNAL PROGRAM ..... 10~11
DISPLAY DATA 12
IC DATA ..... 13~16
WAVEFORM OF TEST POINT 17
PRINTED CIRCUIT BOARD ..... 18~33
BLOCK DIAGRAM ..... 34~36
FRONT END PACK 37
IC BLOCK ..... 38~39
SCHEMATIC DIAGRAM ..... 40~41
PARTS LIST ..... 42~52
REMOTE CONTROL TRANSMITTER 53

100451

YAMAHA
YAMAHA CORPORATION
P.O.Box1,Hamamatsu,Japan
3.15K-093 Printed in Japan '93.1

■ TO SERVICE PERSONNEL

1. Critical Components Information.
   Components having special characteristics are marked and must be replaced with parts having specifications equal to those originally installed.
2. Leakage Current Measurement (For 120V Models Only).
   When service has been completed, it is imperative to verify that all exposed conductive surfaces are properly insulated from supply circuits.

- Meter impedance should be equivalent to 1500 ohm shunted by 0.15µF.
- Leakage current must not exceed 0.5mA.
- Be sure to test for leakage with the AC plug in both polarities.

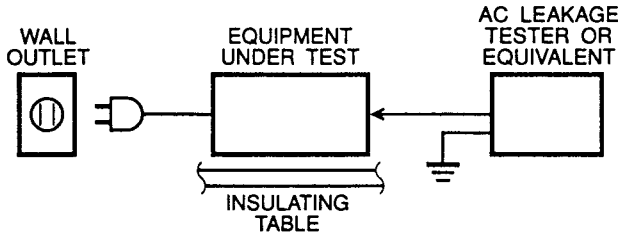

WARNING: CHEMICAL CONTENT NOTICE!

The solder used in the production of this product contains LEAD. In addition, other electrical/electronic and/or plastic (where applicable) components may also contain traces of chemicals found by the California Health and Welfare Agency (and possibly other entities) to cause cancer and/or birth defects or other reproductive harm.

DO NOT PLACE SOLDER, ELECTRICAL/ELECTRONIC OR PLASTIC COMPONENTS IN YOUR MOUTH FOR ANY REASON WHATSOEVER!

Avoid prolonged, unprotected contact between solder and your skin! When soldering, do not inhale solder fumes or expose eyes to solder/flux vapor!

If you come in contact with solder or components located inside the enclosure of this product, wash your hands before handling food.

■ REAR PANELS

▼ U model

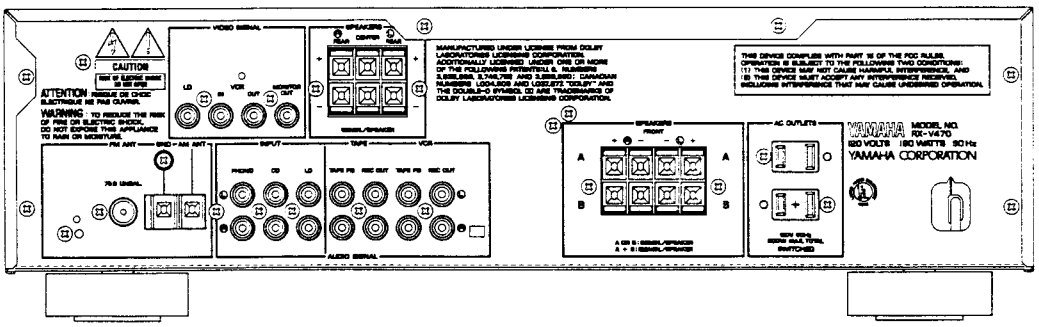

▼ C model

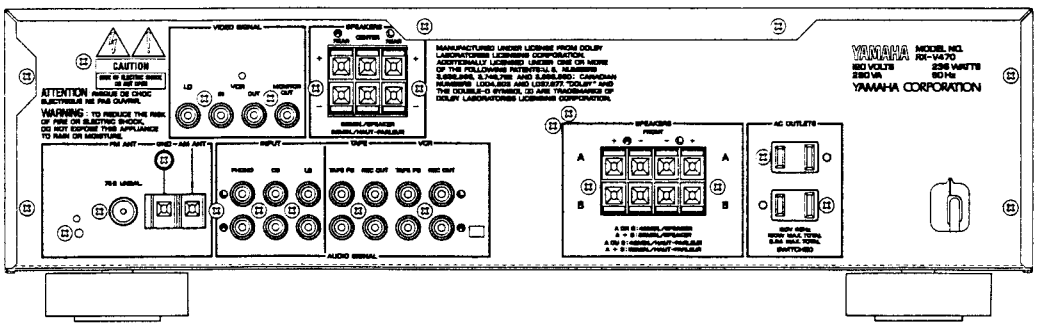

▼ R model

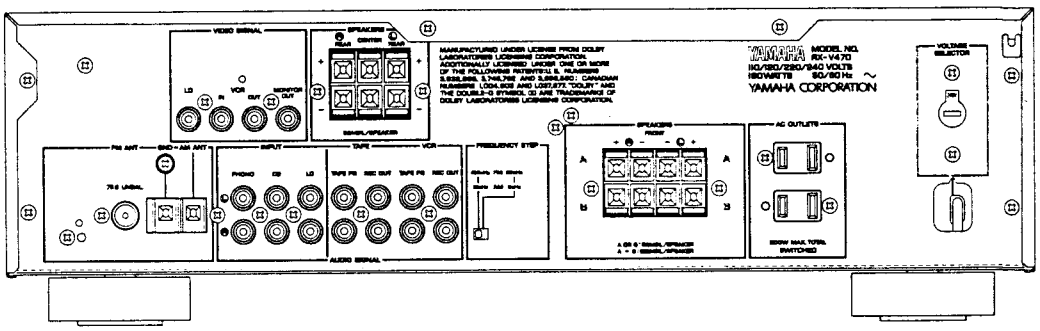

▼ A model

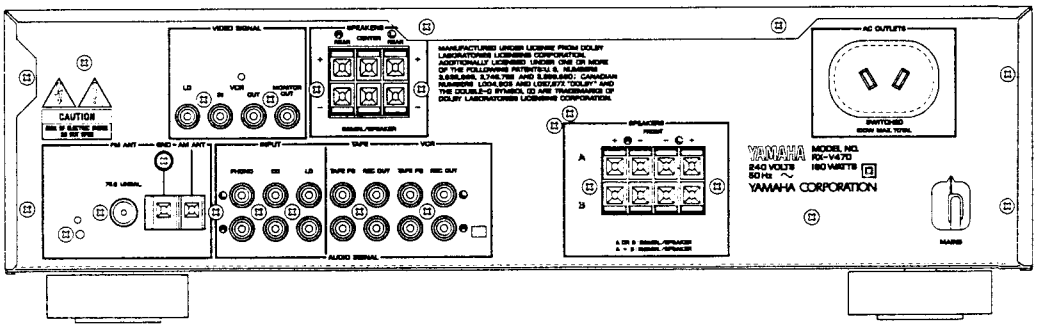

▼ B model

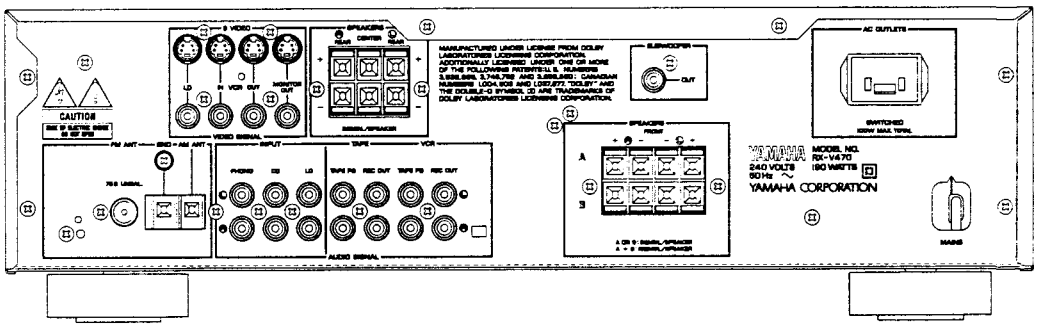

▼ G model

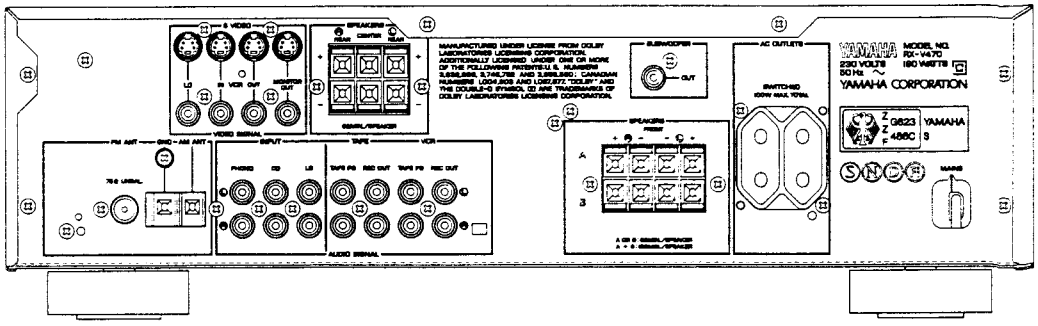

■ SPECIFICATIONS

■ AUDIO SECTION

Minimum RMS Output Power per Channel
FRONT, 20Hz to 20kHz, 0.04% THD, 8Ω 50W
CENTER, 1kHz, 0.1% THD, 8Ω 50W
REAR, 1kHz, 0.5% THD, 8Ω 15W
Dynamic Power per Channel (IHF)
8/6/4/2Ω
U, C models 85/110/125/150W
R, A, B, G models 85/100/115/130W
DIN Standard Output Power per Channel
4Ω, 1kHz, 0.7% THD
G model only 70W
IEC Power (1kHz, 0.04% THD, 8Ω)
G model only 60W
Power Band Width
0.1% THD, 25W, 8Ω ..... 10Hz to 50kHz
Damping Factor
1kHz, 8Ω 50
Input Sensitivity/Impedance
PHONO MM 2.5mV/47kΩ
CD etc 150mV/50kΩ
Maximum Input Signal Level (1kHz, 0.02% THD)
PHONO MM 80mV
Subwoofer Output Level/Impedance
B, G models 2.8V/700Ω
Output Level/Impedance
REC OUT 150mV/550Ω
Headphone Jack Rated Output/Impedance
0.04% THD, 1kHz, RL= 390Ω 0.4V/8Ω
Frequency Response (20Hz to 20kHz)
CD etc ..... ±0.5dB
RIAA Equalization Deviation (20Hz to 20kHz)
PHONO MM ..... ±0.5dB
Total Harmonic Distortion (20Hz to 20kHz)
PHONO MM to REC OUT (3V) 0.01%
CD etc to SP OUT (25W/8Ω) 0.03%
Signal-to-Noise Ratio (IHF-A Network)
PHONO MM (5mV Input Shorted) 82dB
CD etc (Shorted) 93dB
Residual Noise (IHF-A Network) 140μV
Channel Separation (Vol. –30dB)
PHONO MM (Input Shorted) 1kHz 55dB
CD etc (Input 5.1kΩ Terminated) 1kHz 55dB
Tone Control Characteristics
BASS : Boost/cut ..... ±10dB (50Hz)
TREBLE : Boost/cut ..... ±10dB (20kHz)
Gain Tracking Error (0 to –60dB) 3dB

■ VIDEO SECTION

Video Signal
Input Level/Impedance 1Vp-p/75Ω
Output Level/Impedance 1Vp-p/75Ω

■ FM SECTION

Tuning Range
U, C, R models ..... 87.5 to 107.9MHz
A, B, G, R models ..... 87.5 to 108.0MHz
50dB Quieting Sensitivity (IHF, 75Ω)
Except G model
Mono 1.55μV (15.1dBf)
Stereo 21μV (37.7dBf)
Usable Sensitivity (75Ω)
(30dB S/N Quieting, 1kHz, 100% mod.)
Except G model 0.8μV (9.3dBf)
DIN, Mono (S/N 26dB) G model 0.9μV
DIN, Stereo (S/N 46dB) G model 24μV
Image Response Ratio
Except G model 45dB
G model 80dB
IF Response Ratio 80dB
Spurious Response Ratio 70dB
AM Suppression Ratio 55dB
Capture Ratio 1.5dB
Alternate Channel Selectivity
Except G model 85dB
Selectivity (two signals, 40kHz Dev.)
G model 70dB
Signal-to-Noise Ratio
(IHF) Mono/Stereo
Except G model 81/76dB
(DIN-weighted, 40kHz Dev.) Mono/Stereo
G model 75/70dB
Harmonic Distortion (1kHz)
Mono/Stereo
Except G model 0.1/0.2%
Stereo (40kHz Dev.)
G model 0.2%
Frequency Response
20Hz to 15kHz ..... 0±1.5dB
Stereo Separation (1kHz)
Except G model 50dB

■ AM SECTION

Tuning Range
U, C, R models ..... 530 to 1,710kHz
A, B, G, R models ..... 531 to 1,611kHz
Usable Sensitivity 100μV/m
Selectivity 32dB
Signal-to-Noise Ratio 50dB
Image Response Ratio 40dB
Spurious Response Ratio 50dB
Harmonic Distortion (400Hz) 0.3%

AUDIO SECTION
Output Level/Impedance
FM (30% mod., 1kHz)
Except G model 500mV/3.2kΩ
G model (40kHz Dev.) 400mV/3.2kΩ
AM (30% mod., 400Hz)
Except G model 150mV/3.2kΩ
G model 150mV/3.2kΩ

■ GENERAL

Power Supply
- U, C models ..... AC 120V, 60Hz
- A, B models ..... AC 240V, 50Hz
- G model ..... AC 230V, 50Hz
- R model ..... AC 110/120/220/240V, 60/50Hz

Power Consumption
- C model 290VA/235W
- U, R, A, B, G models 190W

AC Outlets
- Switched x 2
  - U, R models ..... 200W max. (Total)
  - C, G models ..... 100W max. (Total)
- Switched x 1
  - A, B models ..... 100W max.

Dimensions (W x H x D) ..... 435 x 131 x 292mm (17-1/8" x 5-3/16" x 11-1/2")

Weight ..... 7.2 kg (15 lbs. 14 oz.)

Accessories ..... AM loop antenna x 1
Indoor FM antenna x 1
Remote Control Transmitter x 1
Battery (size "AA","R06") x 2

** Specifications subject to change Without notice.*

U ..... USA model
C ..... Canadian model
A ..... Australian model
B ..... British model
G ..... European model
R ..... General model

DOLBY SURROUND PRO · LOGIC

Manufactured under license from Dolby Laboratories Licensing Corporation. Additionally licensed under one or more of the following patents: U. S. numbers 3682, 886, 3746, 792, and 3959, 590: Canada numbers 1004, 603 and 1037, 877. "Dolby" and the double-D symbol are trademarks of Dolby Laboratories Licensing Corporation.

● DIMENSIONS

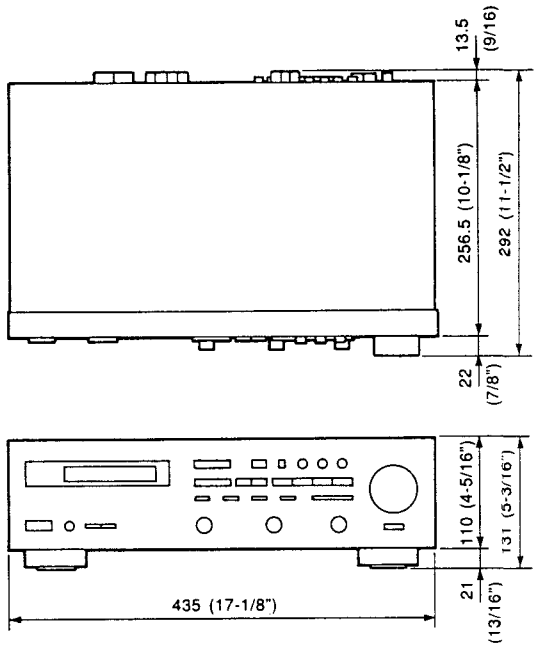

Units : mm (Inch)

■ INTERNAL VIEW

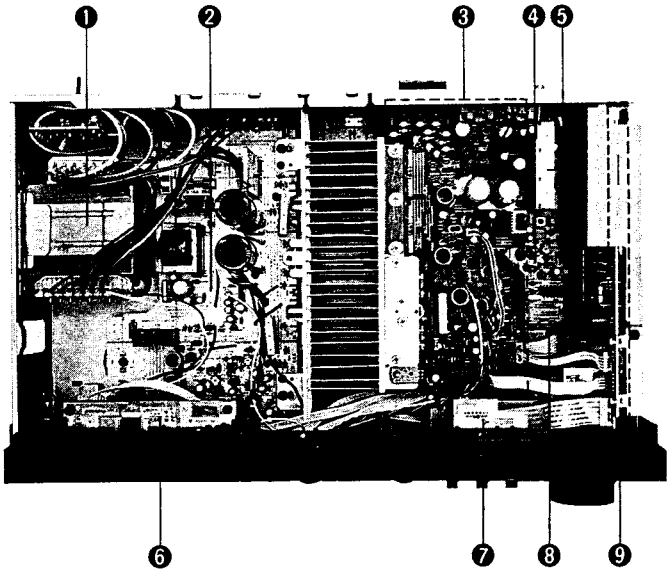

❶ POWER TRANSFORMER
❷ MAIN P.C.B. ASS'Y (2)
❸ EFFECT AMP P.C.B. ASS'Y (2)
❹ MAIN P.C.B. ASS'Y (1)
❺ FRONT END PACK (PK 1)
❻ EFFECT AMP P.C.B. ASS'Y (3)
❼ EFFECT AMP P.C.B. ASS'Y (5)
❽ IC 9 (8 bit μ-COM)
❾ EFFECT AMP P.C.B. ASS'Y (1)

■ DISASSEMBLY PROCEDURES

(Remove parts in the order as numbered.)

1. **Removal of Top Cover**
   Remove 7 screws (①) in Fig. 1 and slide the Top Cover back and up.
2. **Removal of Front Panel**
   a. Remove 7 knobs.
   b. Remove 3 screws (②) and 4 hooks in Fig. 1, and pull the Front Panel forward.
3. **Check of Main P. C. B. Ass'y and replacement of parts.**
   a. Remove 12 screws (③) in Fig. 1.
   b. Remove the Main Chassis as shown in Fig. 2.
   In this condition it is possible for you check the Main P. C. B. Ass'y, and replace the parts.

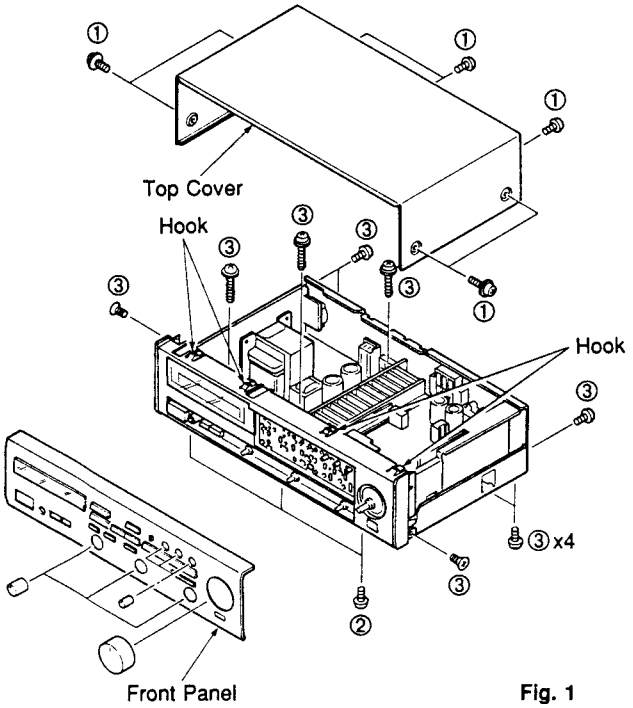

Fig. 1

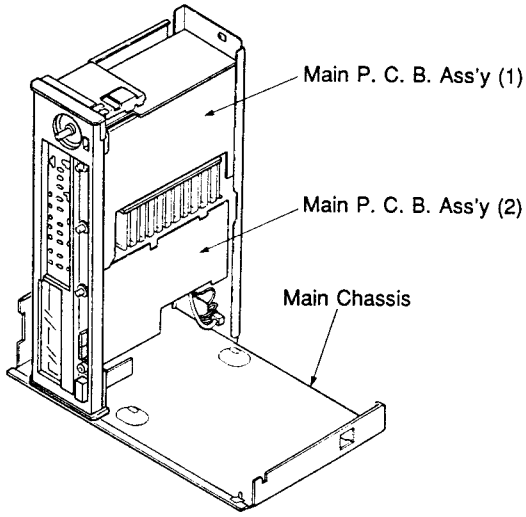

Fig. 2

■ ADJUSTMENTS

<POWER SUPPLY CHECK>

Check that the following voltages are obtained respectively across each test point and ground on main circuit.

Test point	Rating or standard
Q40 Emitter	$+9.5V\ ^{+0.5}_{-1.0}$ V
Q42 Emitter	$-9.5V\ ^{+1.0}_{-0.5}$ V
D18 Cathode	+12V ± 1V

<AUDIO SECTION>

● Idling Current Adjustment

For this adjustment, wait for 10 minutes with no signal applied after the power was turned ON.

Item	Test Point	Adjusted points	Rating (DC)
L ch	Between both terminals of R179	VR 13	22mV ± 8mV
R ch	Between both terminals of R174	VR 12	

● Idling Current Check of Center Amp

The voltage between both leads of emitter resister R860 is to be ≤ 5mV.
If it is > 5mV, cut off R846 (22k).

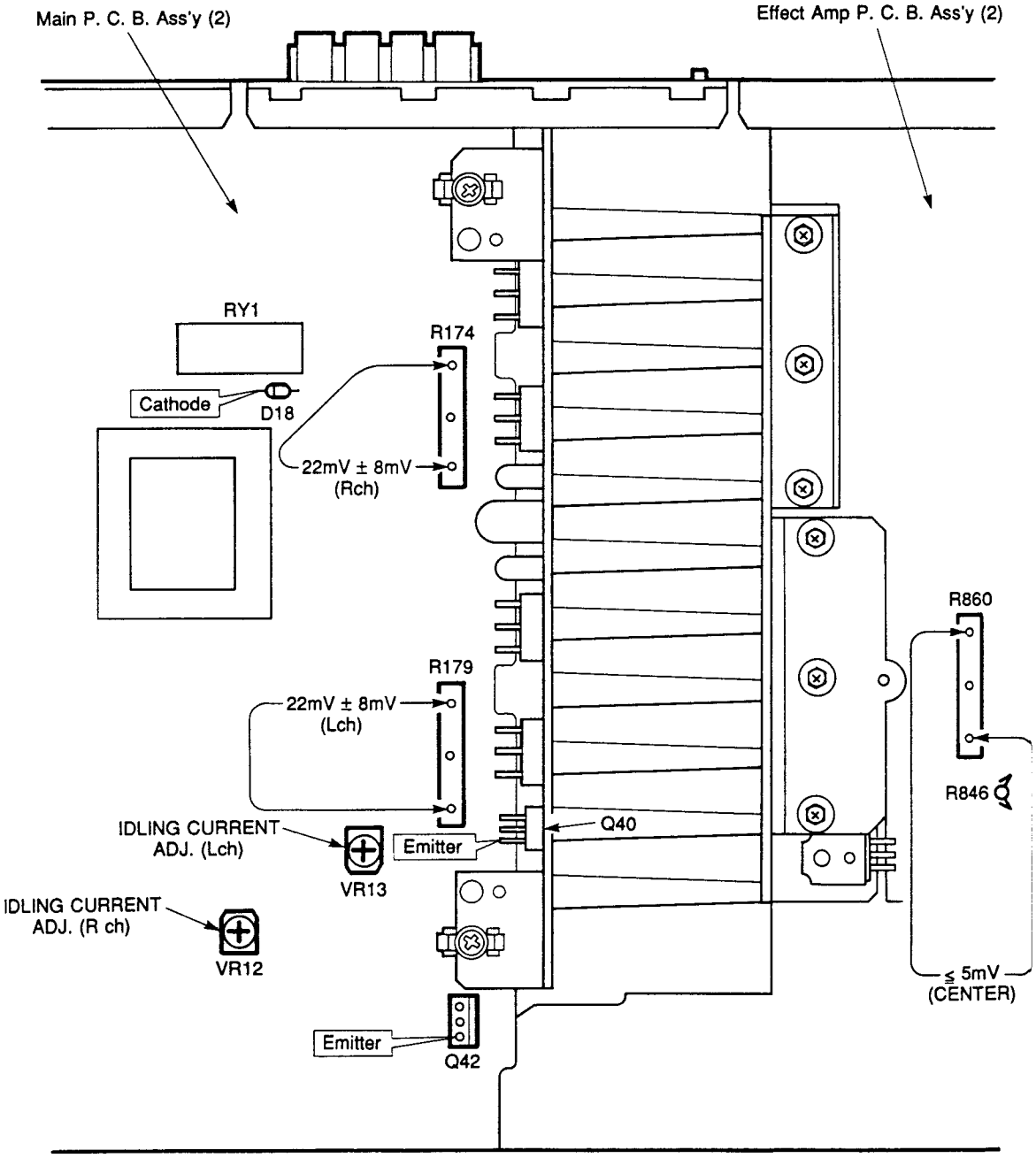
Main P. C. B. Ass'y (2)
Effect Amp P. C. B. Ass'y (2)
RY1
R174
Cathode
D18
22mV ± 8mV
(Rch)
R860
R179
22mV ± 8mV
(Lch)
R846
IDLING CURRENT
ADJ. (Lch)
Emitter
Q40
VR13
IDLING CURRENT
ADJ. (R ch)
VR12
≦ 5mV
(CENTER)
Emitter
Q42

<TUNER SECTION>

● Measuring Instruments

FM signal generator (FM SG)
Stereo signal generator (SSG)
AM signal generator (AM SG)
Distortion meter (DIST. M)
AC voltmeter (ACVM)
DC voltmeter (DCVM)
Oscilloscope
Low pass filter (YLF-15, fc=15kHz)
Oscillator

● Dummy antenna

FM dummy antenna

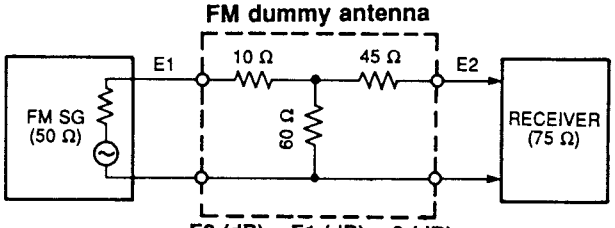

E2 (dB) = E1 (dB) – 6 (dB)

FM dummy antenna

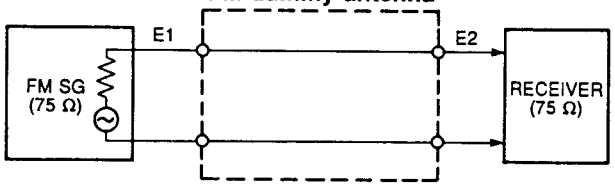

E2 (dB) = E1 (dB)

AM dummy antenna

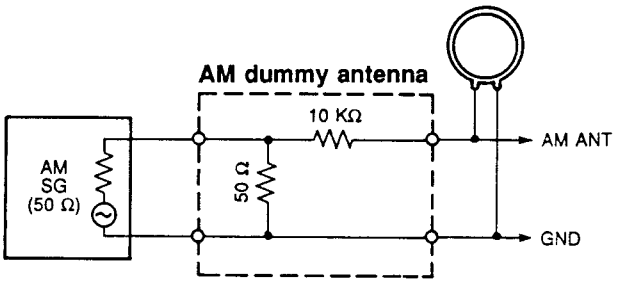

FM Adjustment

● Before Adjustment

1) For dB, 1μV=0dBμ applies.
   Example : 60dBμ=1mV
2) 100% modulation means that the frequency deviation is 75kHz. (R, U, C, A, B)
3) For the G model, Frequency Deviation is 40kHz.
4) Install the Matching Transformer and connect FM SG.
5) Set each switch at the following position unless otherwise specified.

   INPUT SELECTOR.....TUNER
   TUNING MODE .....AUTO

● Connection diagram (Measuring instruments)

1) Discriminator balance adjustment

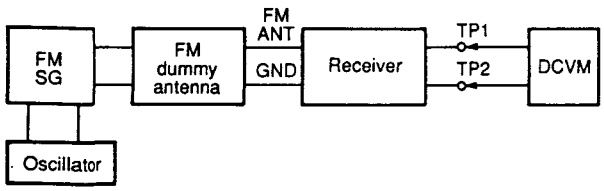

2) Monaural distortion adjustment

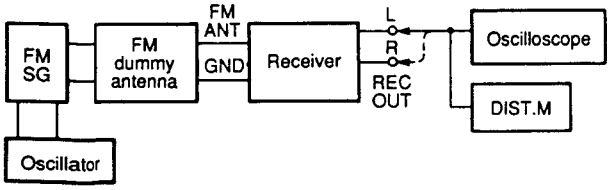

3) Stereo distortion adjustment/separation adjustment

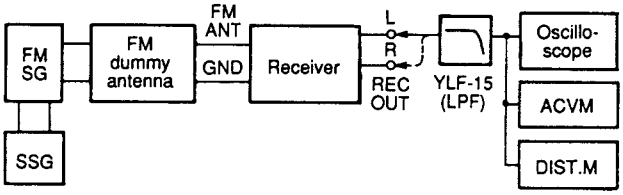

4) Sensitivity Verification

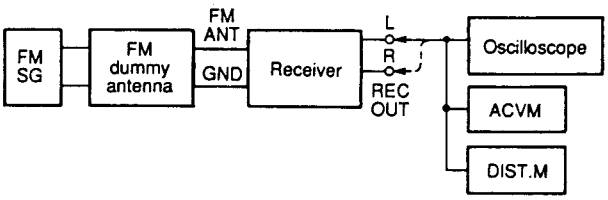

Step	Adjustment Item	Signal (ANT IN)	Frequency Setting	Adjustment Locations	Test Points	Adjustment Method (Rating)
1	Discriminator balance	FM ANT (75Ω) 98.1 MHz 70dBμ MONO 100Hz 100% MOD	98.1 MHz	L6 (CENTER)	TP1~TP2	0V ± 50mV (DC) Tuned point
2	Monaural distortion	Same as step 1	98.1 MHz	L6 (DISTORTION)	REC OUT L, R	Minimize the distortion
3	Stereo distortion	FM ANT (75Ω) 98.1 MHz 70dBμ STEREO (L or R) 1kHz 100% MOD	98.1 MHz	Front end IFT	REC OUT L, R	• Make distortion minimum • 1.4% or less • Check that STEREO indicator lights. • Don't turn IFT too much, for it will cause its sensitivity to deteriorate.
4	Confirmation of Monaural distortion	FM ANT (75Ω) 98.1 MHz 70dBμ MONO 1kHz 100% MOD	98.1 MHz			• Confirm that the monaural distortion satisfies the specifications. • 0.4% or less
5	Confirmation of Sensitivity	Same as step 4	98.1 MHz		FM ANT (75Ω)	• Read antenna terminal voltage with an S/N ratio of 30dB using an FM SG. • 3dBμ (14.25dBf) or less (Except G model) 8dBμ or less (G model only)
6	Separation	FM ANT (75Ω) 98.1 MHz 70dBμ STEREO (L or R) 1kHz 100% MOD	98.1 MHz	VR4	REC OUT L, R	With SSG output at L or R, the signal leakagelevel at the other channel should be minimized. 36dB or more
7	Confirmation of Discriminator balance	FM ANT (75Ω) 98.1 MHz 70dBμ MONO 1kHz 100% MOD	98.1 MHz		TP1~TP2	0V ± 50mV (DC) Tuned point
8	Signal meter	FM ANT (75Ω) 45dBμ MONO 1kHz 30% MOD	98.1 MHz	VR1		• Adjust so that all signal meters light. • Confirm that all signal meters goes out at detuned point.
9	Confirmation of auto search reception	FM ANT (75Ω) 98.1 MHz 26dBμ MONO 1kHz 30% MOD	98.1 MHz			• Automatic reception should be available when the tuning key is moved UP and DOWN. • Audio muting should be applied during tuning.

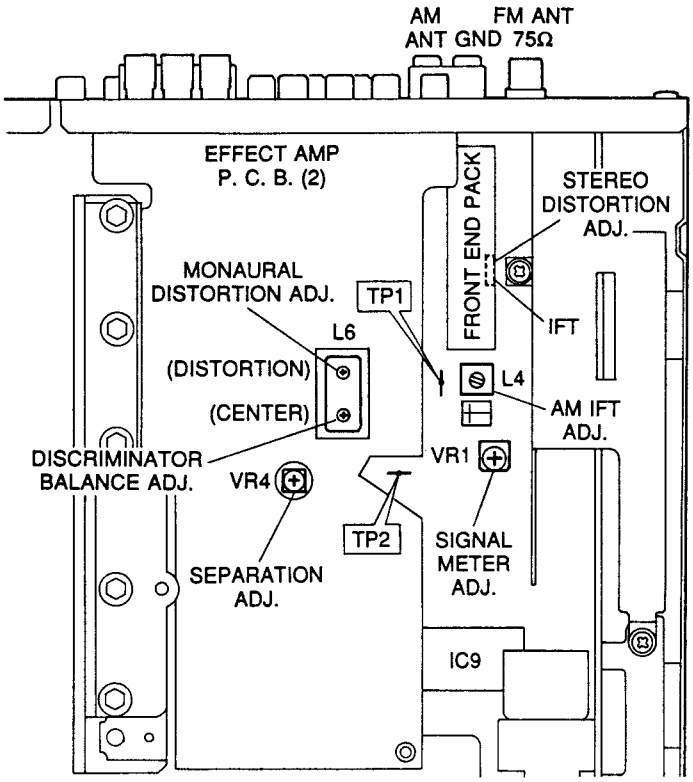

AM Adjustment (This should be done after FM adjustment.)

● Connection Diagram (Measuring instruments)

1) Adjustment of sensitivity

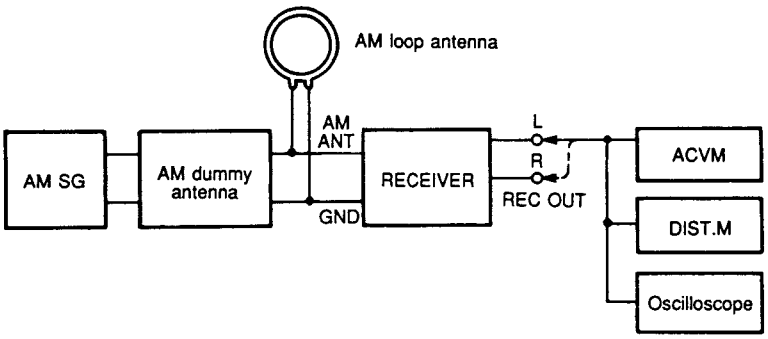

Step	Adjustment Item	Signal (ANT IN)	Frequency Setting	Adjustment Locations	Test Points	Adjustment Method (Rating)
1	AM IFT	AM ANT 1080kHz 400Hz, 30% MOD	1080kHz	L4	REC OUT L, R	• Adjust so that the audio output is at maximum. • Non AGC
2	Confirmation of sensitivity	Same as step 1	1080kHz		REC OUT L, R	• Obtain AM SG output level where distortion become 10% • 54dBμ or less
3	Confirmation of signal meter	AM ANT 1080kHz 100dBμ 400Hz, 30% MOD	1080kHz			• All signal meters should light. • Confirm that all signal meters goes out at returned point.
4	Confirmation of auto-search reception	AM ANT 1080kHz 65dBμ 400Hz, 30% MOD				Auto reception should be available when the tuning key is moved UP and DOWN.

■ TEST SIGNAL PROGRAM

To facilitate inspection and measurement, a test signal program is programmed in this set.

CAUTION : Using a table as shown below, write down the content of the memory preset in the tuner before setting to the test signal program mode.
(This is because setting to the test signal program mode sets the tuner memory content in the state preset by the manufacturer and erases all the memory preset by the user.)
Upon completion of the test signal program, set to the tuner mode again and enter the preset memory as written in the table.

Preset group	P1	P2	P3	P4	P5	P6	P7	P8
A								
B								
C								
D								
E								

1. Starting Operation

While pressing 3 keys of PHONO, CD and TUNER simultaneously, turn ON the POWER switch, and the test signal program mode No.1 will start.

2. Functions available during the test signal program mode

In the test signal program mode, any operation other than those listed below is invalid.

- **Selection key of diagnosis mode**
- **INPUT SELECTOR key : Switching input source**
- **POWER ON/OFF key : Power ON/OFF**

TEST PROGRAM 1. — LCD&INITIALIZE
When the TEST program procedure is started, all LCD's turn ON, the set is initialized and the content as preset by the manufacturer is executed.
Then, when A/B/C/D/E key is pressed once, "P1" appears in the LCD after a few seconds.

- **INPUT : CD**
- **MONITOR OUT : LD**
- **SURROUND : DD PRO LOGIC**

Note : To restore the TEST program 1 from any other TEST program, press the A/BC/D/E key.

TEST PROGRAM 2. — LED & INHIBIT
The TEST program 2 checks the function to switch between the input source.
When the MEMORY key is pressed, "P2" appears in the LCD and the input selector switches automatically. When the operation stops, the LCD turns OFF.

LCD : Lighting occurs in the order of PHONO, CD, TUNER, TAPE, LD after the above display, the LCD turns OFF.

TEST PROGRAM 3.
As the TEST program 3 is not intended for servicing, it needs not be performed.

Reference :
When the FM/AM key is pressed, "P3 8" appears in the LCD.

TEST PROGRAM 4. — STEERING OFF
Press the TUNING MODE key

The MULTIPLYING DAC value in the DSP-LSI output step gets out of the control by the internal direction emphasis circuit and now it can be set through the microcomputer. Then the output of each channel is as listed below.

- **LEFT** : L signal
- **RIGHT** : R signal
- **CENTER** : L, R in-phase component
- **REAR** : L, R negative phase component

The LCD displays "P4 CD".

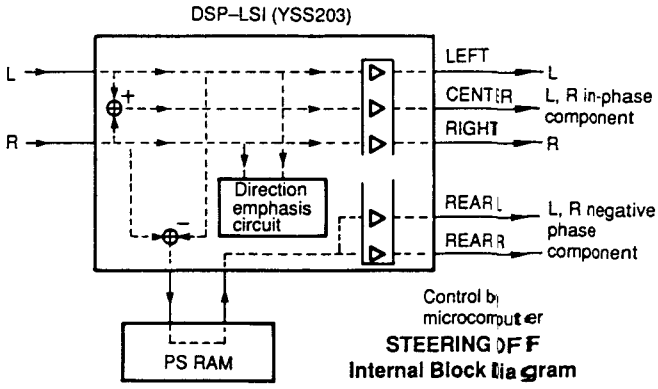

STEERING OFF Internal Block Diagram

TEST PROGRAM 5. — RAM THROUGH
The TEST program 5 checks the output of each channel
Press the TUNING DOWN key

The L and R channels enter the through state and (L + R)/2 is output at the CENTER and REAR.

The LCD displays "P5 CD".

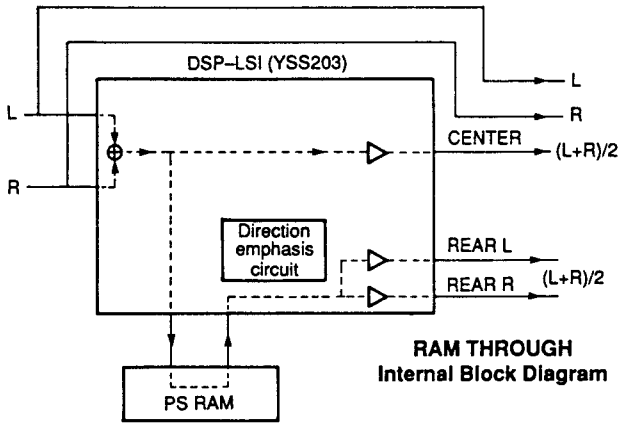

RAM THROUGH Internal Block Diagram

TEST PROGRAM 6. — Not performed
As the TEST program 6 is not intended for servicing, do not perform it.

Note : When the TUNING UP key is pressed by mistake, "P6" appears in the LCD. This is meaningless for self-diagnosis function. If this has occurred by accident, do not proceed with other TEST programs. Turn OFF the power once and theb restart the TEST program procedure.

TEST PROGRAM 7. — MANUAL TEST TONE
Press the TEST Key

The TEST tone of the DOLBY PRO LOGIC shifts in the order of L C R S (Surround) at every pressing of the TEST key. Also, the LCD displays
"TEST" and the TEST output position ("L", "C", "R" or "S").
Example) "TEST L"

TEST PROGRAM 8. — EXIT
Press the EFFECT Key

The program gets out of the self diagnosis mode and reenters the normal operation mode as factory-set.

3. Cancellation

The program is reset to the normal operation mode by turning the power OFF or by pressing the EFFECT key. At the same time, the "maker preset" is also executed.

● Maker Preset

1) TUNER section

Preset group	P1	P2	P3	P4	P5	P6	P7	P8
A, C, E	87.5MHz	90.1MHz	95.1MHz	98.1MHz	U, C : 107.9MkHz R, A, B, G : 108.0MkHz	88.1MHz	106.1MHz	U, C : 107.9MkHz R, A, B, G: 108.0MHz
B, D	630kHz	1080kHz	1440kHz	U, C : 530kHz R, A, B, G: 531kHz	U, C : 1710kHz R, A, B, G: 1611kHz	900kHz	1350kHz	U, C : 1400kHz R, A, B, G: 1404kHz

All tuning modes are AUTO TUNING and AUTO STEREO.

2) SURROUND section

DELAY TIME : DD PRO LOGIC ..... 20ms (Factory-set surround mode)
ENHANCED 20ms
CONCERT VIDEO 25ms
MONO MOVIE 25ms
ROCK CONCERT 15ms
CONCERT HALL 30ms

CENTER MODE : NORMAL

3) SELECTOR section

INPUT : CD
MONITOR OUT : LD

■ DISPLAY DATA (VP113900)

● V501 : LCD8244BIJP

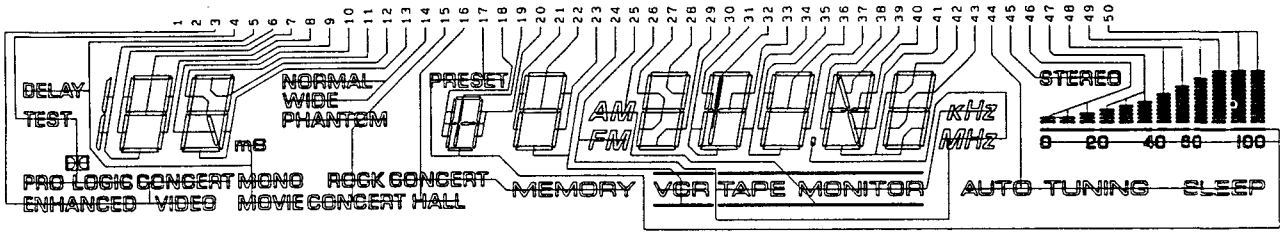

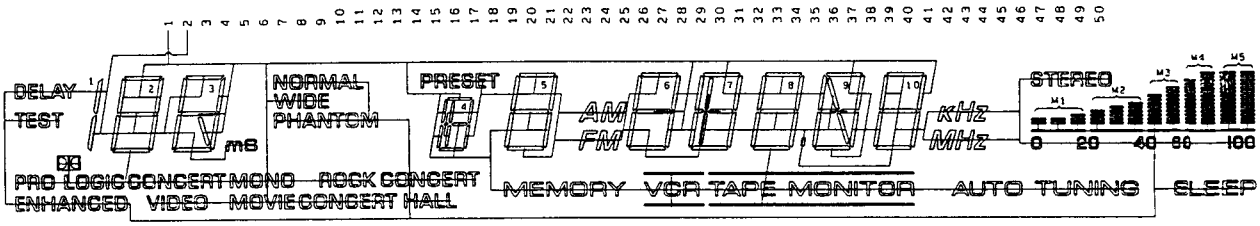

No.	1	2	3	4	5	6	7	8	9	10	11	12	13	14	15	16	17	18	19	20	21	22	23	24
COM1	—	COM	ENHANCED	TEST	DELAY ms	1ad	2e	2g	2c	3e	3f	3a	3d	NORMAL	PHANTOM	CONCERT HALL	2)	4g	4ij	4bc	5f	5a	5b	5d
COM2	COM	—	CONCERT VIDEO	1)	MONO MOVIE	2d	2f	2a	2b	3h	3g	3b	3b	WIDE	ROCK CONCERT	MEMORY	4d	4ef	4a	4h	5e	5g	5c	$\overline{\text{VCR}}$

No.	25	26	27	28	29	30	31	32	33	34	35	36	37	38	39	40	41	42	43	44	45	46	47	48	49	50
COM1	FM DP MHZ	AM KHZ	6ef	6a	6d	7d	7g	7ij	7h	7c	8e	8g	8c	9e	9i	9gh	9j	10acdf	10g	SLEEP	STEREO	M1	M2	M3	M4	M5
COM2	TAPE	$\overline{\text{MONITOR}}$	6g	6b	6c	7e	7f	7a	7b	8d	8f	8a	8b	9f	9a	9b	9c	9d	10be	AUTO TUNING	—	—	—	—	—	—

1) ▯▯ PRO LOGIC
2) PRESET 0 20 40 60 100

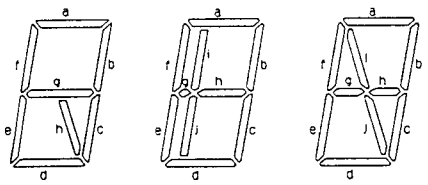

■ IC DATA

IC9 : M50747-04B9
8bit μ-COM

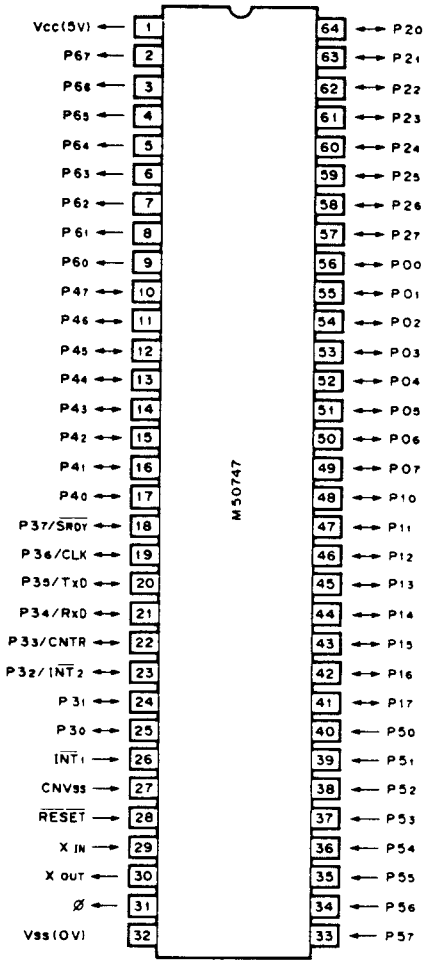

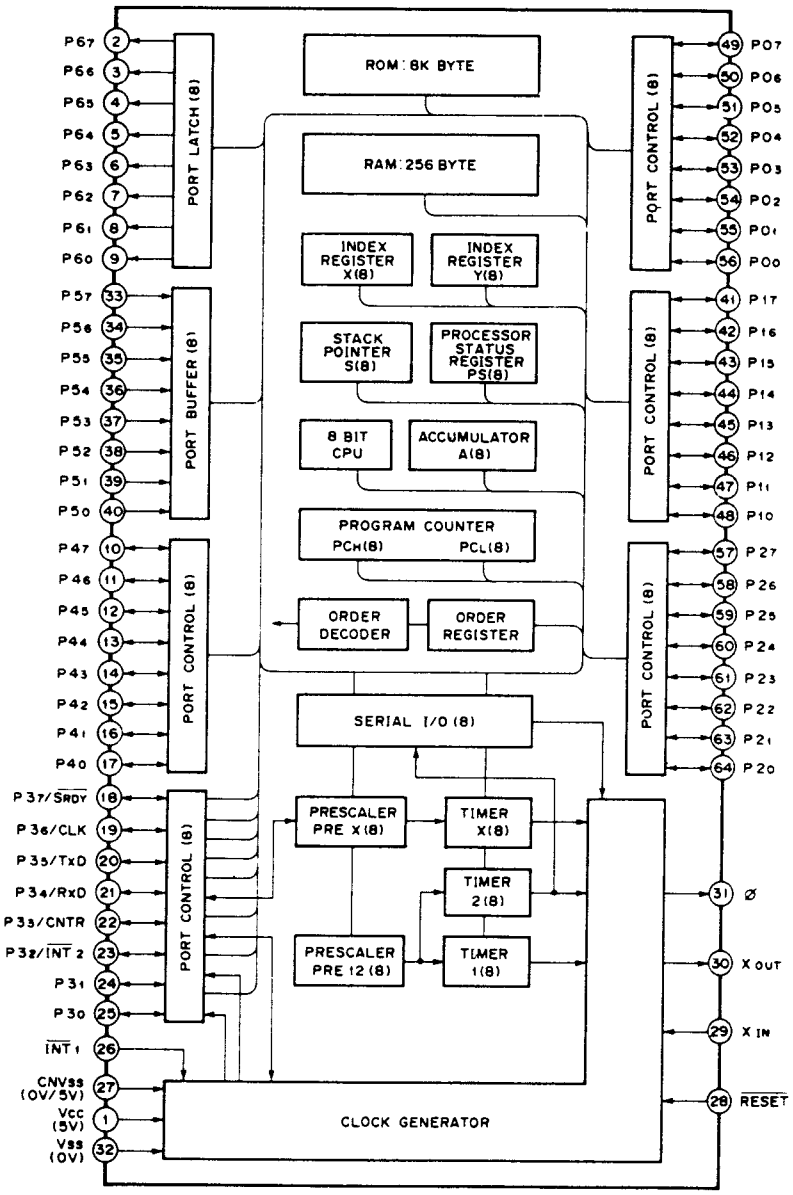

Market select (Table A)

V1 (22)	V2 (23)	Market
1	0	A, B, G
0	1	U, C
1	1	R

Pin No.	Pin Name	Function Name	I/O	Active	Description
1	VCC	VCC	—		+5V
2	P67	SEL	O	H	DSP select
3	P66	CEDSP	O	H	Chip select for DSP
4	P65	CEFSR	O	H	Chip select for LC7823N
5	P64	VUP	O	H	Volume Up
6	P63	D1	O	H	Key Digit
7	P62	D2	O	H	
8	P61	D3	O	H	

Pin No.	Pin Name	Function Name	I/O	Active	Description
9	P60	D4	O	H	Key Digit
10	P47	K1	I	H	Key Input
11	P46	K2	I	H	
12	P45	K3	I	H	
13	P44	K4	I	H	
14	P43	K5	I	H	
15	P42	PSW	I	H	Power Switch
16	P41	PODN	I	L	Power down detect
17	P40	VDN	O	H	Volume Down
18	P37/$\overline{\text{SRDY}}$	NC	O	—	N.C.
19	P36/CLK	CLKIN	I	H/L	Serial clock in
20	P35/TXD	DATA	O	H/L	Serial data out
21	P34/RXD	CLKOUT	O	H/L	Serial clock out
22	P33/CNTR	V1	I	H/L	Market Select (Table A)
23	P32/$\overline{\text{INT2}}$	V2	I	H/L	
24	P31	G/NOTG	I	H/L	G model select (Except G : L, G : H)
25	P30	REMO	I	H/L	Remote control signal input
26	$\overline{\text{INT1}}$	REMO	I	H/L	External interrupt
27	CNVSS	GND	—		GND
28	$\overline{\text{RESET}}$	RESET	—		Reset
29	XIN	OSC	—		Clock (8 MHz)
30	XOUT	OSC	—		
31	Ø	—	—		N.C.
32	VSS	VSS	—		GND
33	P57	PROTECT	I	L	Protection detect
34	P56	—	—	—	N.C.
35	P55	ST	I	L	Stereo detect
36	P54	STSG	I	L	Synchronous signal in
37	P53	STPOUT	I	L	Auto tuning stop signal
38	P52	DATA	O	H	Clock data for serial transmission
39	P51	CL	I	H	
40	P50	—	I	—	N.C.
41	P17	CETUN	O	H	Chip select for LM7000
42	P16	STRQ	O	H	Stop request for LM7000
43	P15	CELCD	O	H	Chip select for LC7582
44	P14	INH	O	H	LCD INHIBIT
45	P13	MONO	O	L	forced MONO
46	P12	TMUTE	O	H	Tuner Mute
47	P11	METER	O	L	Meter Mute
48	P10	FMUTE	O	L	Full Mute
49	P07	STBY	O	H	LED for STAND BY
50	P06	TMON1	O	H	Tape Monitor 1 (TAPE)
51	P05	TMON2	O	H	Tape Monitor 2 (VCR)
52	P04	—			N.C.
53	P03	—			
54	P02	—			
55	P01	ICMUTE	O	H	Effect IC Mute (IC804, 805)
56	P00	POW	O	H	Power Switch drive
57	P27	VDSEL	O	H	Video Selector
58	P26	RMUTE	O	L	Rear Mute
59	P25	CMUTE	O	L	Center Mute
60	P24	—		—	N.C.
61	P23	INH1	O	H	Input Selector
62	P22	4052B	O	H	
63	P21	4052A	O	H	
64	P20	—		—	N.C. (RS phono play/cut)

IC604 : YSS203 or YSS203B-F
Digital Dolby Pro Logic Decoder with Auto Input Balance

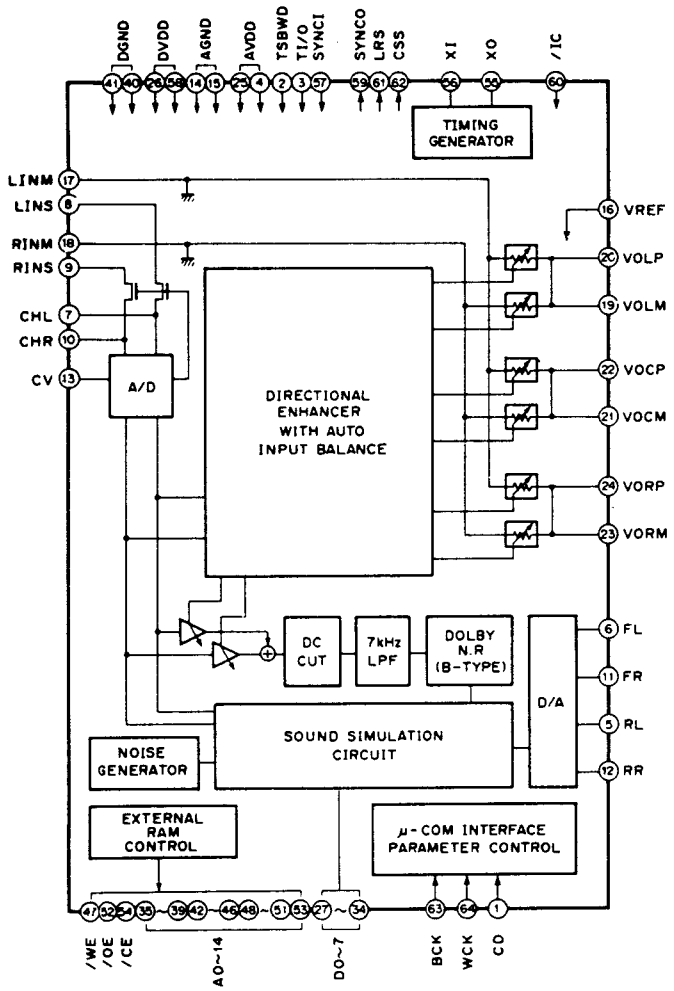

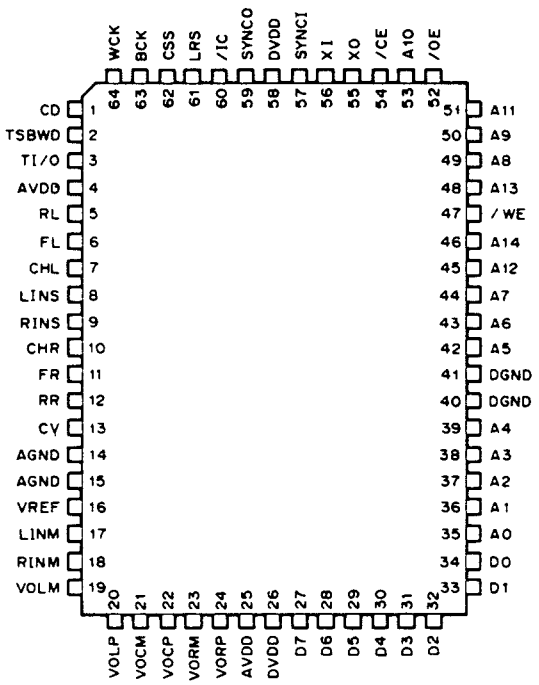

Pin No.	Pin Name	I/O	Function
1	CD	Its	Serial data of parameter data input
2	TSBWD	Ic	LSI test terminal Normally connected to DVDD
3	TI/O	Ic	LSI test terminal Normally connected to /CSS terminal
4	AVDD	A—	+5V power supply (D/A, A/D section)
5	RL	AO	RL channel D/A output
6	FL	AO	FL channel D/A output
7	CHL	A—	LINS input Sample/hold Capacitor external terminal
8	LINS	AI	L channel A/D input
9	RINS	AI	R channel A/D input
10	CHR	A—	RINS input Sample/hold Capacitor external terminal
11	FR	AO	FR channel D/A input
12	RR	AO	RR channel D/A input
13	CV	AO	A/D, multiplaying DAC center voltage
14	AGND	A—	Ground (D/A, A/D section)
15	AGND	A—	Ground (Multiplying DAC section)
16	VREF	AI	Multiplying DAC reference voltage input
17	LINM	AI	L channel Multiplying DAC input
18	RINM	AI	R channel Multiplying DAC input
19	VOLM	AO	L channel operation amplifier, connected to (–) terminal
20	VOLP	AO	L channel operation amplifier, connected to (+) terminal

Pin No.	Pin Name	I/O	Function
21	VOCM	AO	C channel operation amplifier, connected to (–) terminal
22	VOCP	AO	C channel operation amplifier, connected to (+) terminal
23	VORM	AO	R channel operation amplifier, connected to (–) terminal
24	VORP	AO	R channel operation amplifier, connected to (+) terminal
25	AVDD	A—	+5V power supply (multiplying DAC section)
26	DVDD	—	+5V power supply (digital section)
27	D7	I/Ot	External delay RAM data terminal
28	D6	I/Ot	External delay RAM data terminal
29	D5	I/Ot	External delay RAM data terminal
30	D4	I/Ot	External delay RAM data terminal
31	D3	I/Ot	External delay RAM data terminal
32	D2	I/Ot	External delay RAM data terminal
33	D1	I/Ot	External delay RAM data terminal
34	D0	I/Ot	External delay RAM data terminal
35	A0	O	External data RAM address terminal
36	A1	O	External data RAM address terminal
37	A2	O	External data RAM address terminal
38	A3	O	External data RAM address terminal
39	A4	O	External data RAM address terminal
40	DGND	—	Ground (digital section)
41	DGND	—	Ground (digital section)
42	A5	O	External data RAM address terminal
43	A6	O	External data RAM address terminal
44	A7	O	External data RAM address terminal
45	A12	O	External data RAM address terminal
46	A14	O	External data RAM address terminal
47	/WE	O	External delay RAM write enable terminal
48	A13	O	External dalay RAM address terminal
49	A8	O	External dalay RAM address terminal
50	A9	O	External dalay RAM address terminal
51	A11	O	External dalay RAM address terminal
52	/OE	O	External dalay RAM output enable terminal
53	A10	O	External dalay RAM address terminal
54	/CE	O	External delay RAM chip enable terminal
55	XO	O	Crystal oscillator connecting terminal
56	XI	I	Crystal oscillator connecting terminal
57	SYNCI	It	Test terminal for system synchronization, normally connected to DVDD
58	DVDD	—	+5V power supply (digital section)
59	SYNCO	O	Test terminal for system synchronization, normally unconnected
60	/IC	Ics	Initial clear terminal (Power ON resetting is necessary)
61	LRS	O	External automatic input balance terminal, normally left open
62	/CSS	O	External automatic input balance terminal, connected to TI/O terminal
63	BCK	Its	Bit clock for parameter data input
64	WCK	Its	Word clock for parameter data input

Note : Alphabets used in the above I/O column represent as follows.

I : Input terminal **O** : Output terminal **t** : TTL level

C : CMOS level **S** : Schmidt input **A** : Analog terminal

■ WAVEFORM OF TEST POINT

Point ① (Pin1 of IC6)
V : 2V/div H : 50nsec/div
DC range 1 : 1 prove

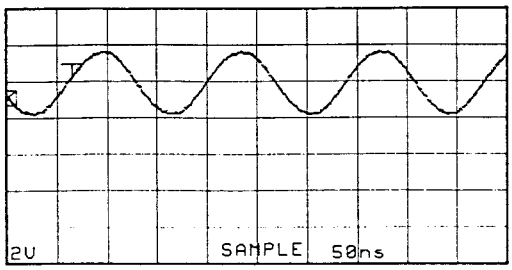

Point ② (Pin6 of IC9)
V : 2V/div H : 5msec/div
DC range 1 : 1 prove

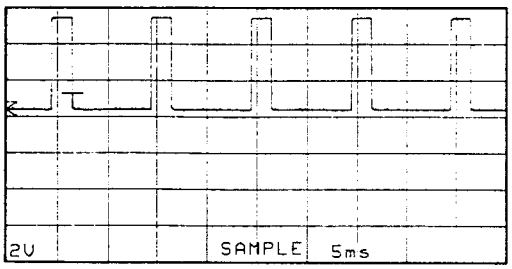

Point ③ (CH1 : Pin28 of IC9, CH2 : Anode of D9)
V : 5V/div H : 0.5sec/div
DC range 1 : 1 prove

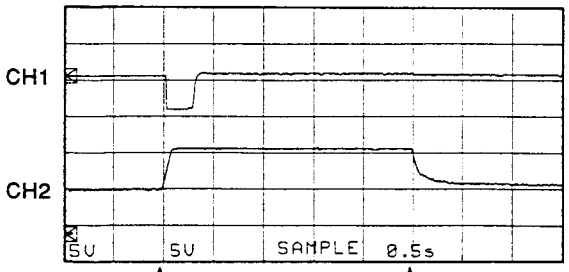

With the POWER switch turned ON, connect the power cord to the AC outlet.

Disconnect the power cord from the AC outlet.

(This waveform is not available by pushing the power switch ON and OFF.)

Point ④ (Pin55 of IC501)
V : 2V/div H : 10μsec/div
DC range 1 : 1 prove

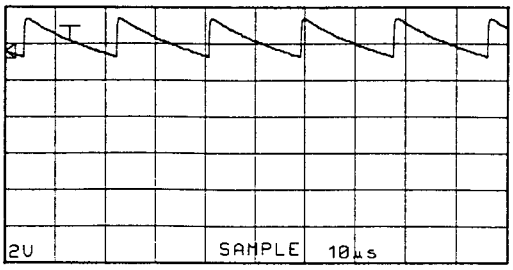

Point ⑤ (Pin1 of V501)
V : 2V/div H : 5msec/div
DC range 1 : 1 prove

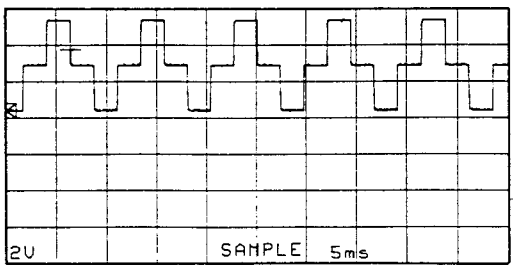

Point ⑥ (Pin1 of IC501 or Pin3 to 48 of V501)
V : 2V/div H : 5msec/div
DC range 1 : 1 prove

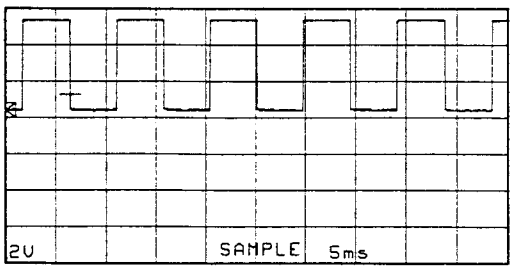

Point ⑦ (Pin55 of IC604)
V : 2V/div H : 0.1μsec/div
DC range 1 : 1 prove

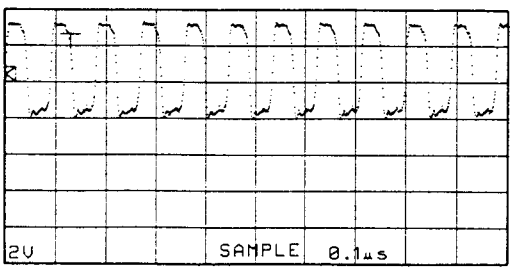

■ PRINTED CIRCUIT BOARD (Foil side)

① to ③ : WAVEFORM OF TEST POINT (See page 17)

● Except G model

● Semiconductor Location

Ref. No.	Location
D 5	E3
D 6	E3
D 7	D4
D 8	D4
D 9	D3
D 10	D3
D 11	D3
D 12	D3
D 13	D3
D 14	D2
D 15	D2
D 16	D3
D 17	F4
D 33	E4
D 34	E4
D 35	F4
IC 1	F3
IC 2	E4
IC 3	F3
IC 4	F4
IC 5	F4
IC 6	E2
IC 7	F3
IC 8	E3
IC 9	D3
IC 10	D4
IC 12	D2
Q 1	E2
Q 2	E2
Q 3	F3
Q 4	F2
Q 5	D3
Q 6	D3
Q 7	D3
Q 8	C4
Q 9	C4
Q 10	D4
Q 13	F4
Q 31	D2
Q 32	E3
Q 43	C3
Q 44	C3
Q 45	D2
Q 46	D2

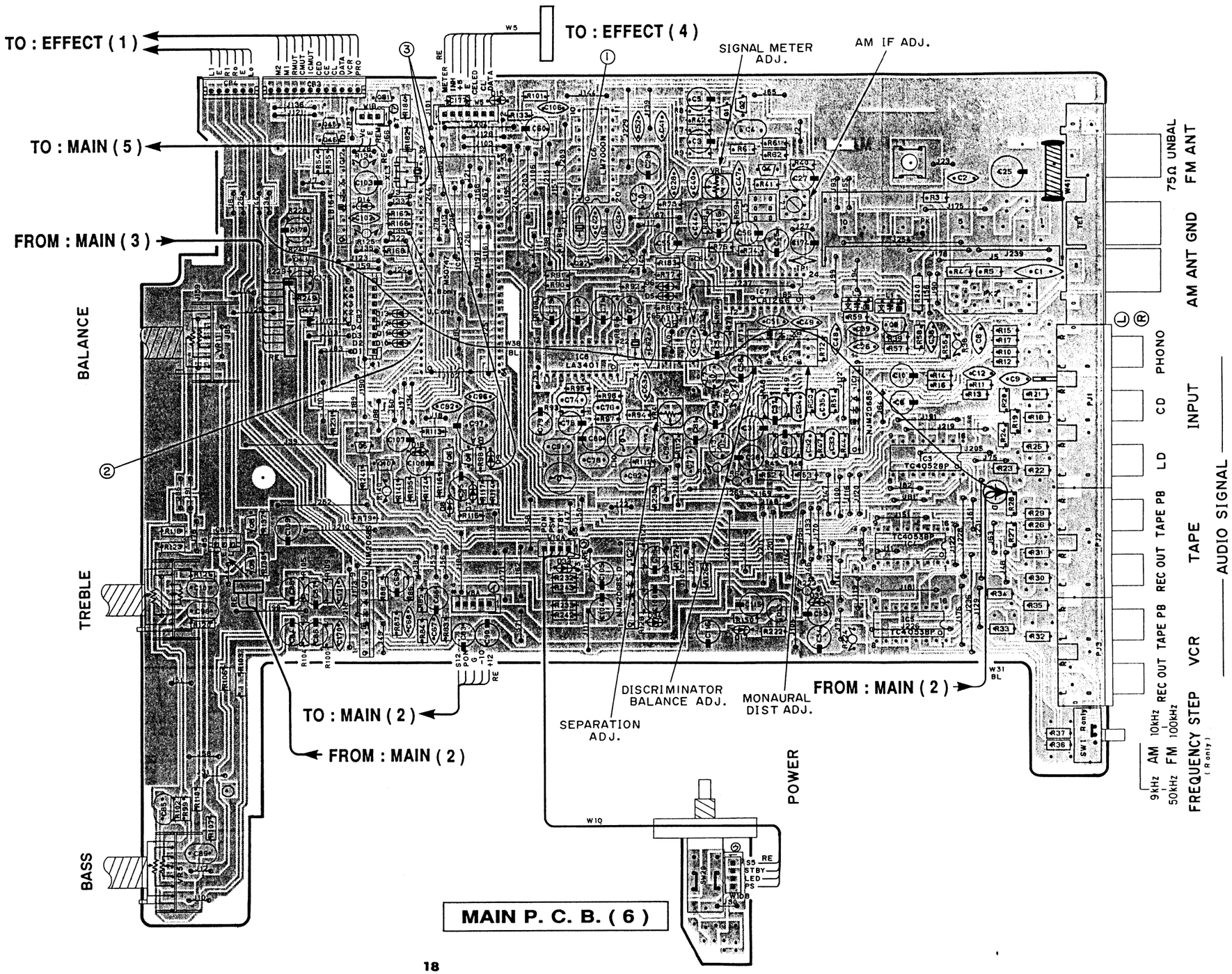

■ PRINTED CIRCUIT BOARD (Foil side)

① to ③ : WAVEFORM OF TEST POINT (See page 17)

● G model

● Semiconductor Location

Ref. No.	Location
D 5	E3
D 6	E3
D 7	D4
D 8	D4
D 9	D4
D 10	D3
D 11	D3
D 12	D3
D 13	D3
D 14	D2
D 15	E2
D 16	D3
D 17	F4
D 33	E4
D 34	E4
D 35	F4
IC 1	F3
IC 2	E4
IC 3	G3
IC 4	F4
IC 5	F4
IC 6	E2
IC 7	F3
IC 8	E3
IC 9	D3
IC 10	D4
IC 12	D2
Q 1	F2
Q 2	F2
Q 3	F3
Q 4	F2
Q 5	D3
Q 6	D3
Q 7	D3
Q 8	C4
Q 9	C4
Q 10	D4
Q 13	F4
Q 31	D2
Q 32	E3
Q 39	F6
Q 43	D3
Q 44	D3
Q 45	D2
Q 46	D2

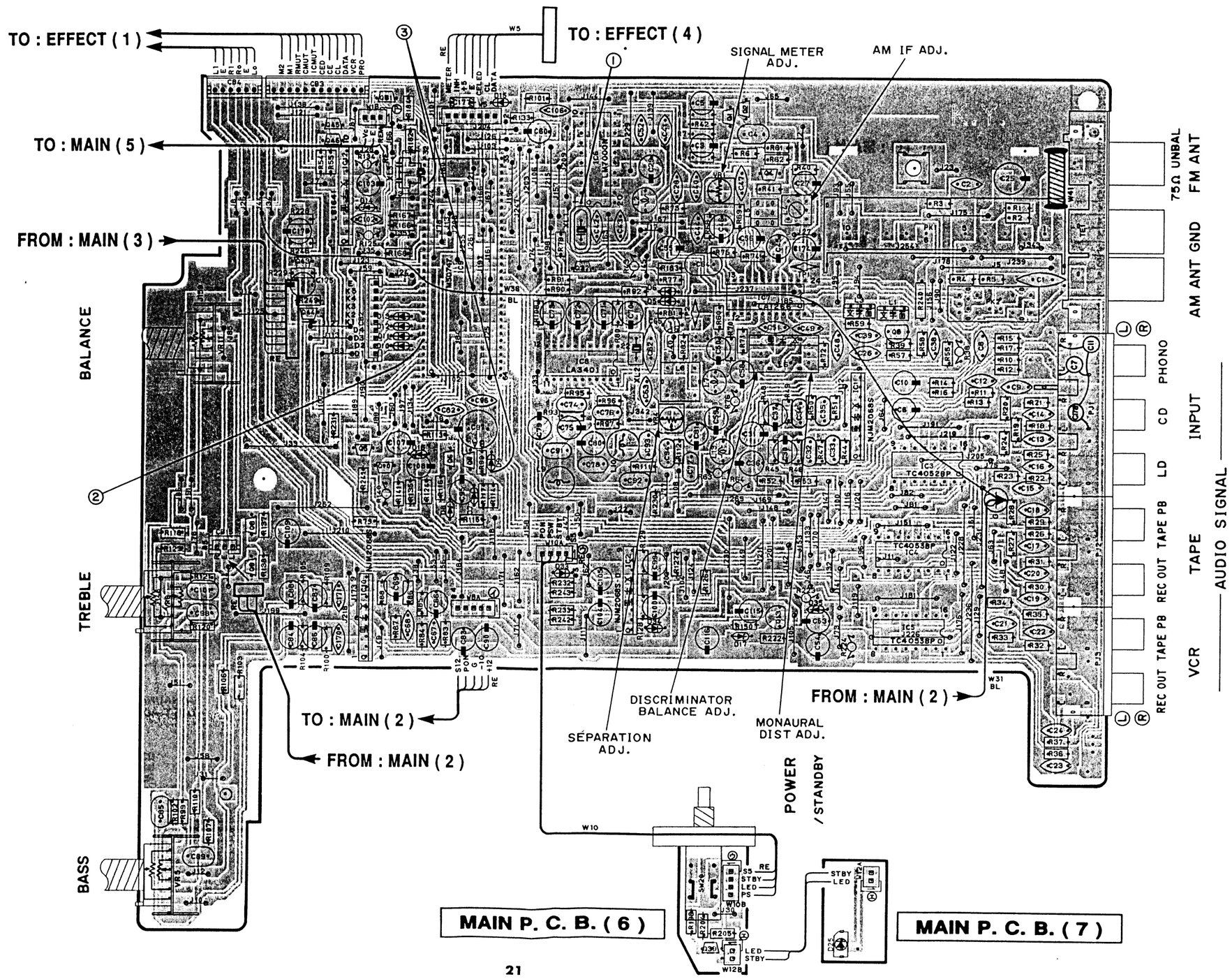

■ PRINTED CIRCUIT BOARD (Foil side)

● Semiconductor Location

Ref. No.	Location
D 18	D3
D 19	D4
D 20	E3
D 21	E3
D 24	E2
D 26	G4
D 27	D4
D 28	C4
D 29	F4
D 30	G3
D 31	G4
IC 13	E4
Q 11	G3
Q 12	G4
Q 14	G3
Q 15	G3
Q 16	D4
Q 17	F3
Q 18	F4
Q 19	E4
Q 20	G4
Q 21	G4
Q 23A	F3
Q 23B	F3
Q 25A	C5
Q 25B	D5
Q 27A	F4
Q 27B	F4
Q 29A	E5
Q 29B	E5
Q 33	D3
Q 34	E4
Q 35	D4
Q 36	E3
Q 40	F5
Q 41	F4
Q 42	G4

● U, C models

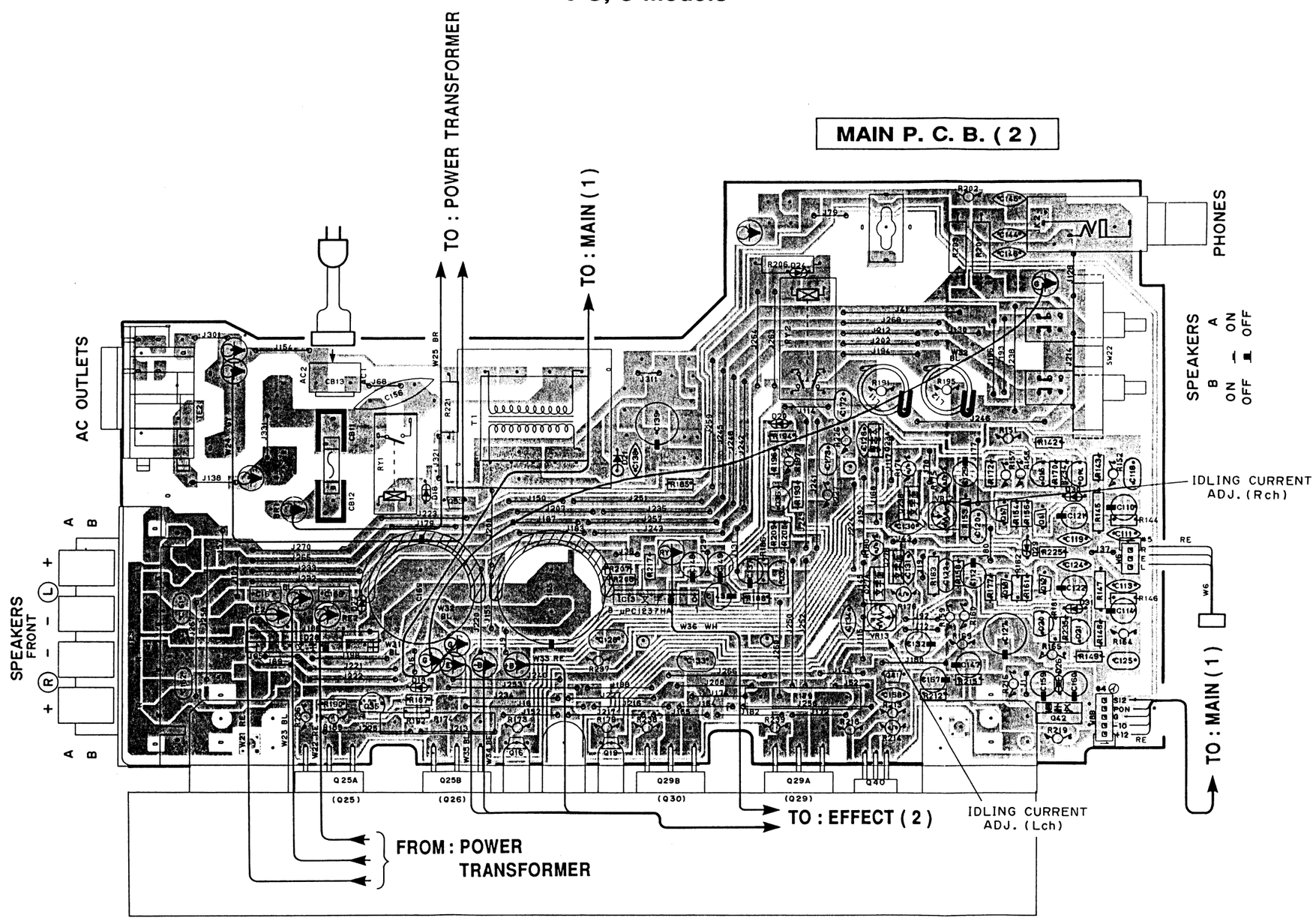

■ PRINTED CIRCUIT BOARD (Foil side)

● Semiconductor Location

Ref. No.	Location
D 18	D4
D 19	D5
D 20	F3
D 21	E4
D 22	E3
D 24	F3
D 26	G4
D 27	D4
D 28	D4
D 29	G4
D 30	G4
D 31	G4
IC 13	E4
Q 11	G4
Q 12	G4
Q 14	G4
Q 15	G4
Q 16	D5
Q 17	G4
Q 18	G4
Q 19	E5
Q 20	G4
Q 21	G4
Q 23A	F3
Q 23B	F4
Q 25A	D5
Q 25B	D5
Q 27A	F4
Q 27B	F4
Q 29A	F5
Q 29B	E5
Q 33	D4
Q 34	F4
Q 35	D5
Q 36	F4
Q 37	E3
Q 38	E3
Q 40	F5
Q 41	F4
Q 42	G5

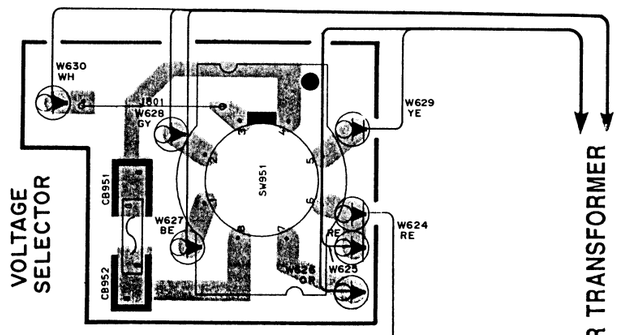

EFFECT P. C. B. (6)

● R model

MAIN P. C. B. (2)

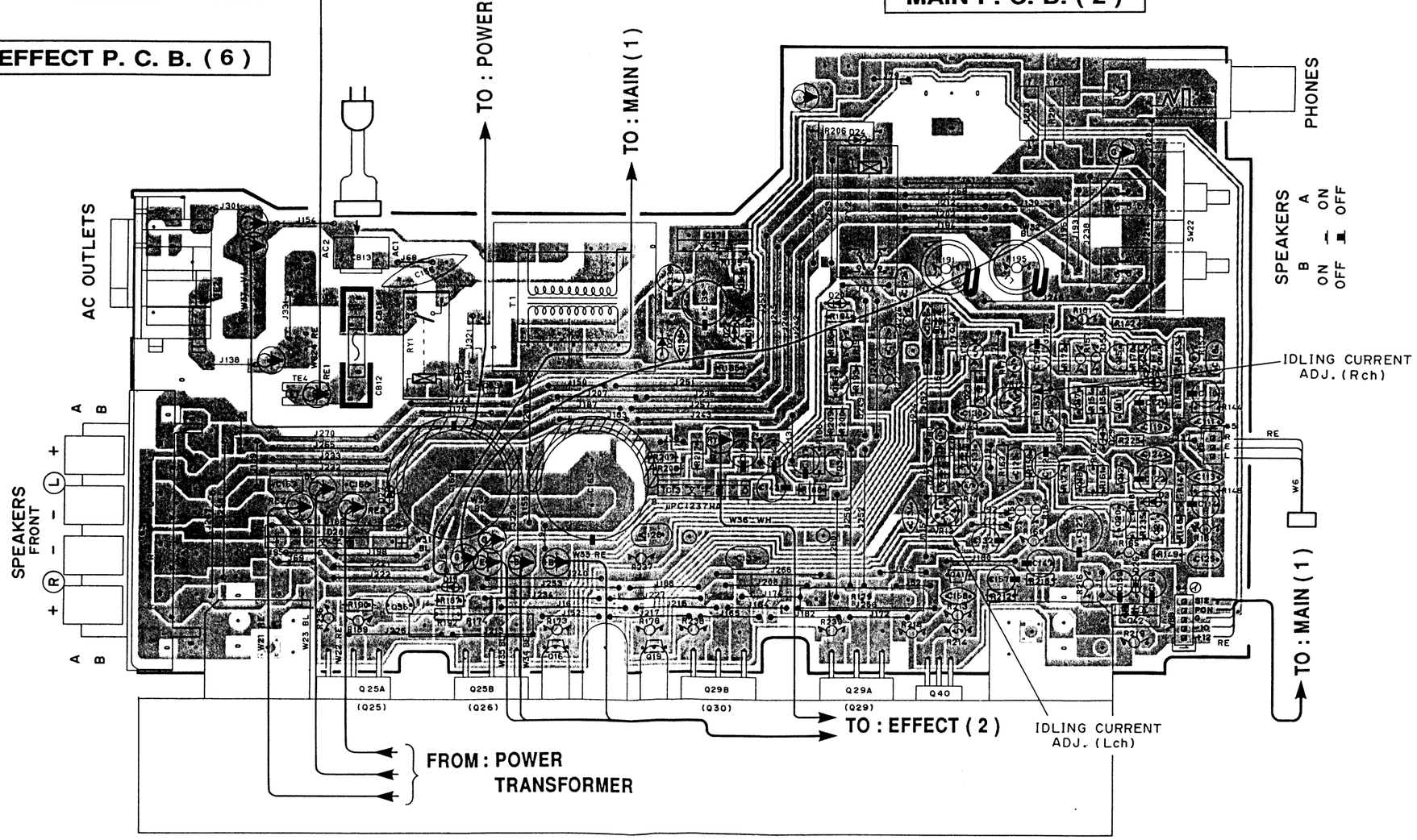

■ PRINTED CIRCUIT BOARD (Foil side)

● Semiconductor Location

Ref. No.	Location
D 18	D3
D 19	D4
D 20	E3
D 21	E3
D 24	F2
D 26	G4
D 27	D4
D 28	C4
D 29	G4
D 30	G3
D 31	G4
IC 13	E4
Q 11	G4
Q 12	G4
Q 14	G3
Q 15	G3
Q 16	D5
Q 17	F4
Q 18	F4
Q 19	E5
Q 20	G4
Q 21	G4
Q 23A	F3
Q 23B	F3
Q 25A	D5
Q 25B	D5
Q 27A	F4
Q 27B	F4
Q 29A	F5
Q 29B	E5
Q 33	D3
Q 34	E4
Q 35	D4
Q 36	E3
Q 40	F5
Q 41	F4
Q 42	G4

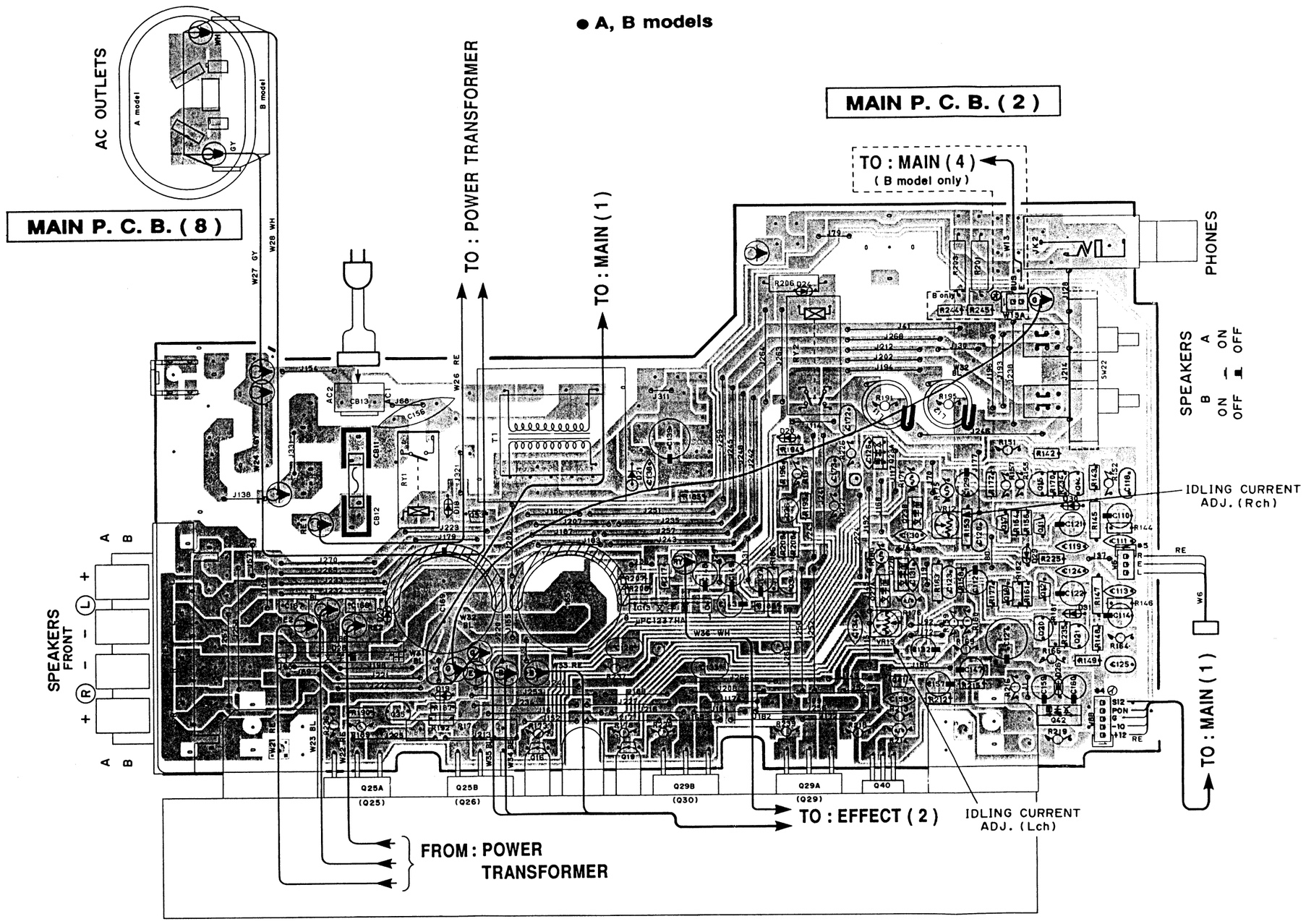

■ PRINTED CIRCUIT BOARD (Foil side)

● Semiconductor Location

Ref. No.	Location
D 18	D3
D 19	D4
D 20	F3
D 21	E3
D 24	F2
D 26	G4
D 27	D4
D 28	D4
D 29	G4
D 30	G3
D 31	G4
IC 13	E4
Q 11	G4
Q 12	G4
Q 14	G3
Q 15	G3
Q 16	D5
Q 17	G4
Q 18	G4
Q 19	E5
Q 20	G4
Q 21	G4
Q 23A	F3
Q 23B	F4
Q 25A	D5
Q 25B	D5
Q 27A	F4
Q 27B	F4
Q 29A	F5
Q 29B	E5
Q 33	D4
Q 34	F4
Q 35	D4
Q 36	F4
Q 40	F5
Q 41	F4
Q 42	G4

● G model

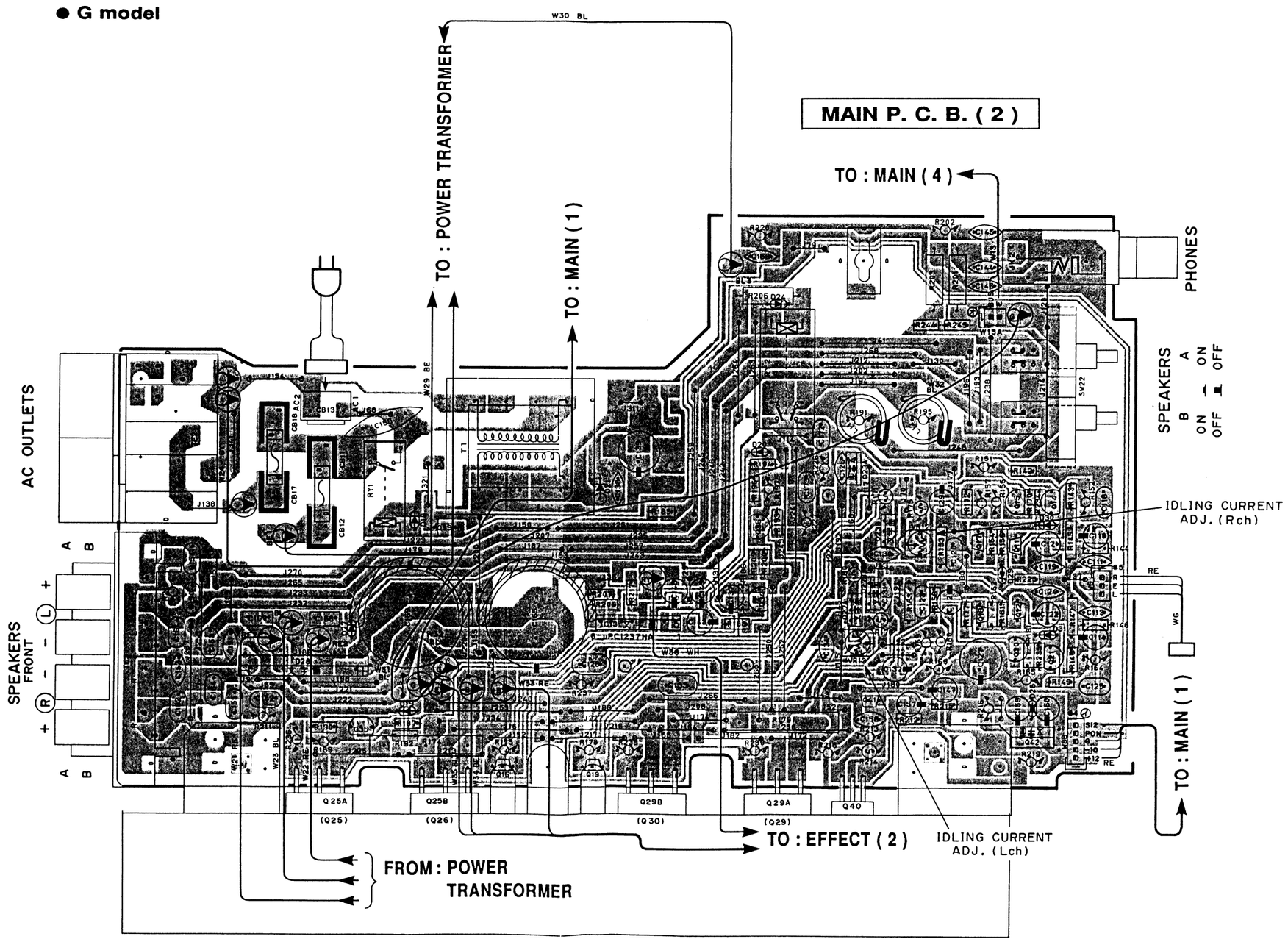

■ PRINTED CIRCUIT BOARD (Foil side)

⑦ : WAVEFORM OF TEST POINT (See page 17)

● Semiconductor Location

Ref. No.	Location
D 601	F5
D 602	F5
D 603	F5
D 604	F5
D 605	F5
D 606	F5
D 607	F5
D 608	F5
D 609	F5
D 801	C4
D 802	C3
D 803	D4
IC 601	G4
IC 602	G4
IC 604	G5
IC 605	F4
IC 606	F5
IC 607	F6
IC 608	G4
IC 609	G4
IC 610	F5
IC 611	G4
IC 612	G3
IC 613	F4
IC 614	F4
IC 615	F3
IC 616	F3
IC 618	F3
IC 801	C2
IC 802	C5
IC 804	E3
IC 805	E3
IC 806	D5
IC 807	C3
Q 601	F2
Q 602	F2
Q 603	F2
Q 801	D5
Q 802	D2
Q 803	C2
Q 804	D5
Q805A	D5
Q805B	D4
Q 806	D5
Q 807	D4
Q 808	C4
Q 809	C4
Q 810	C5
Q811A	D5
Q811B	D4
Q 812	C4
Q 814	C4
Q 815	C4

EFFECT P. C. B. (2)

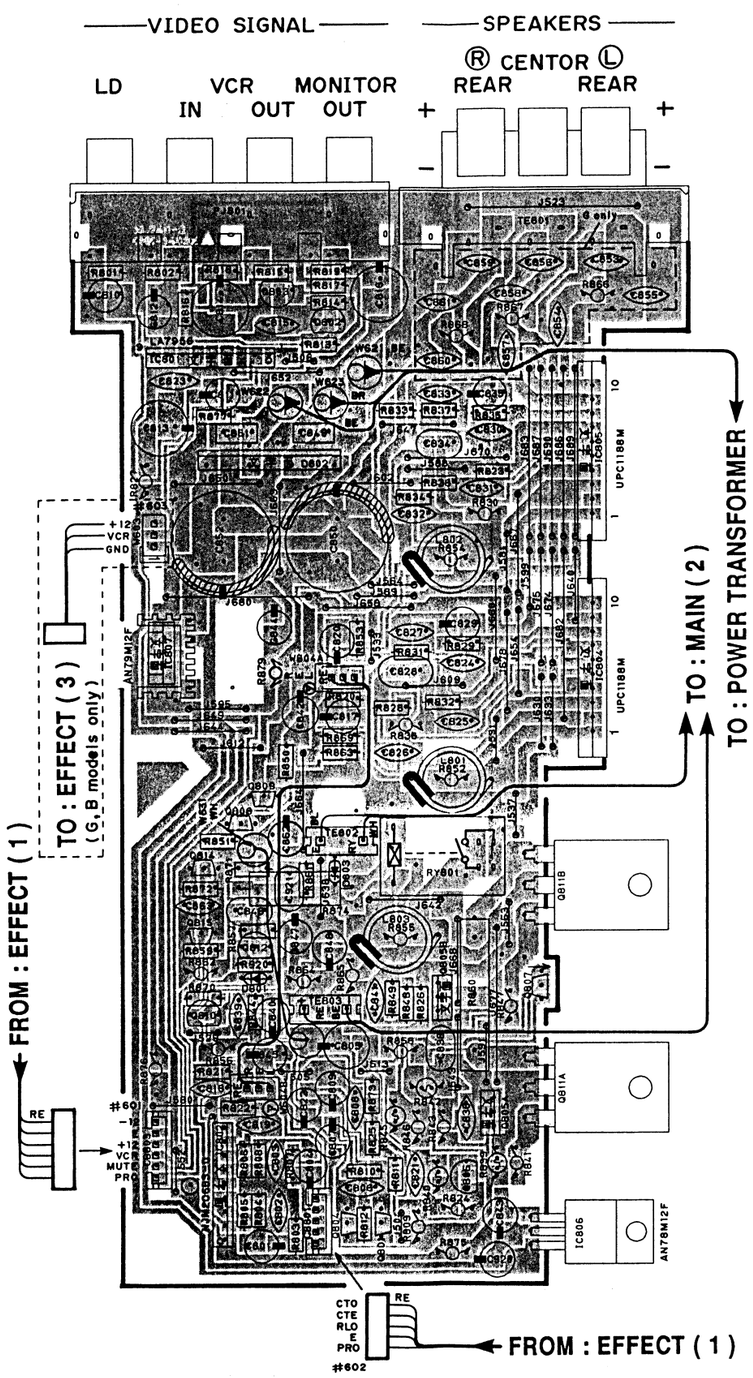

EFFECT P. C. B. (1)

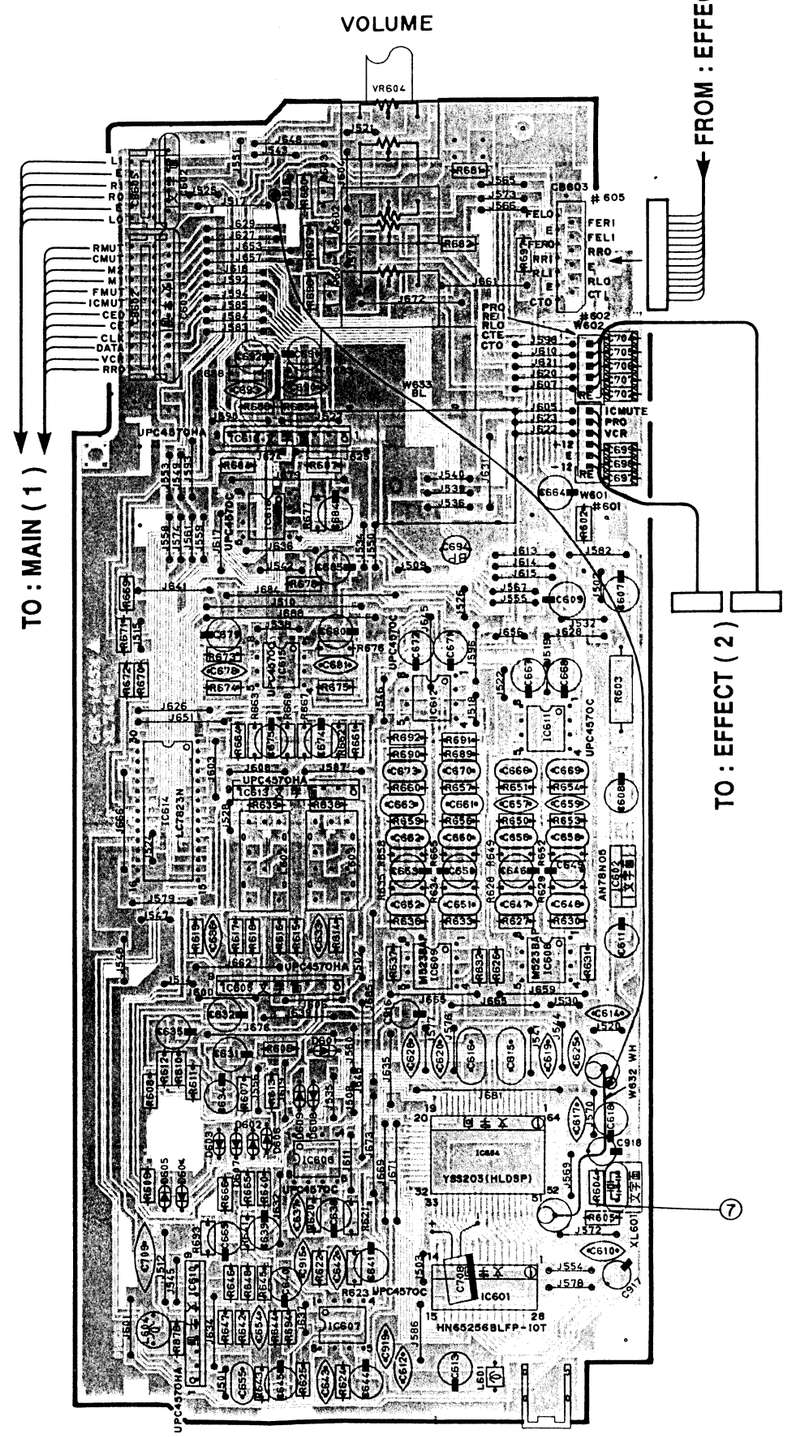

■ PRINTED CIRCUIT BOARD (Foil side)

● G, B models

EFFECT P. C. B. (3)

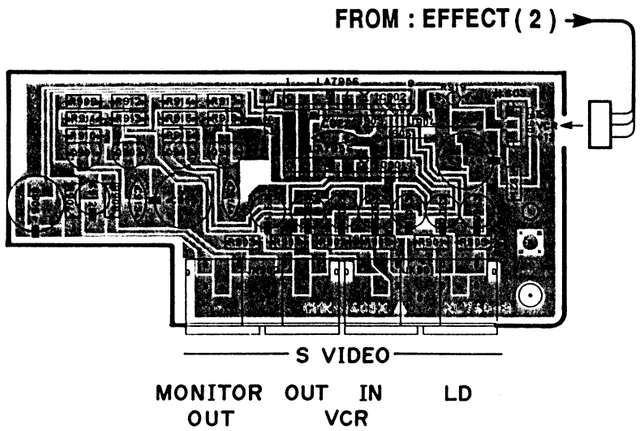

EFFECT P. C. B. (5)

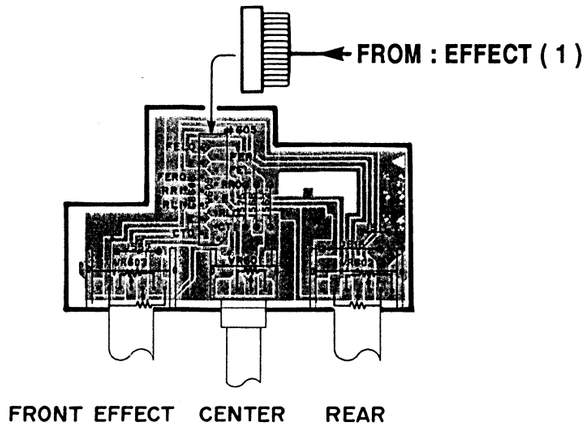

● G, B models

MAIN P. C. B. (4)

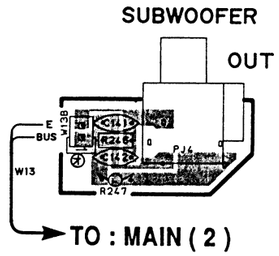

MAIN P. C. B. (5)

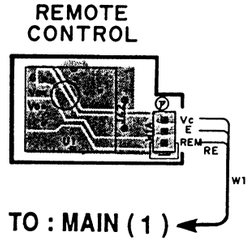

④ to ⑥ : WAVEFORM OF TEST POINT (See page 17)

EFFECT P. C. B. (4)

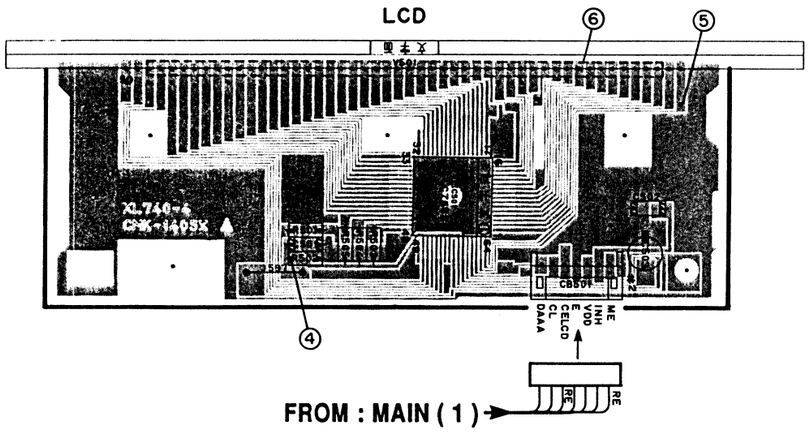

MAIN P. C. B. (3)

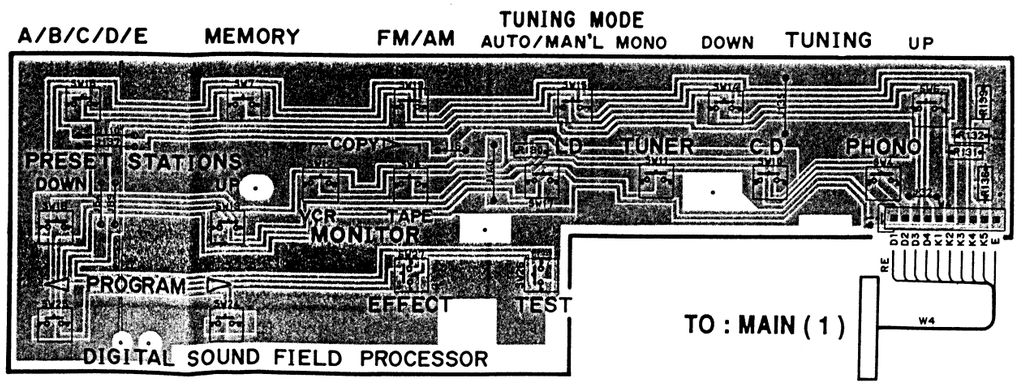

■ BLOCK DIAGRAM

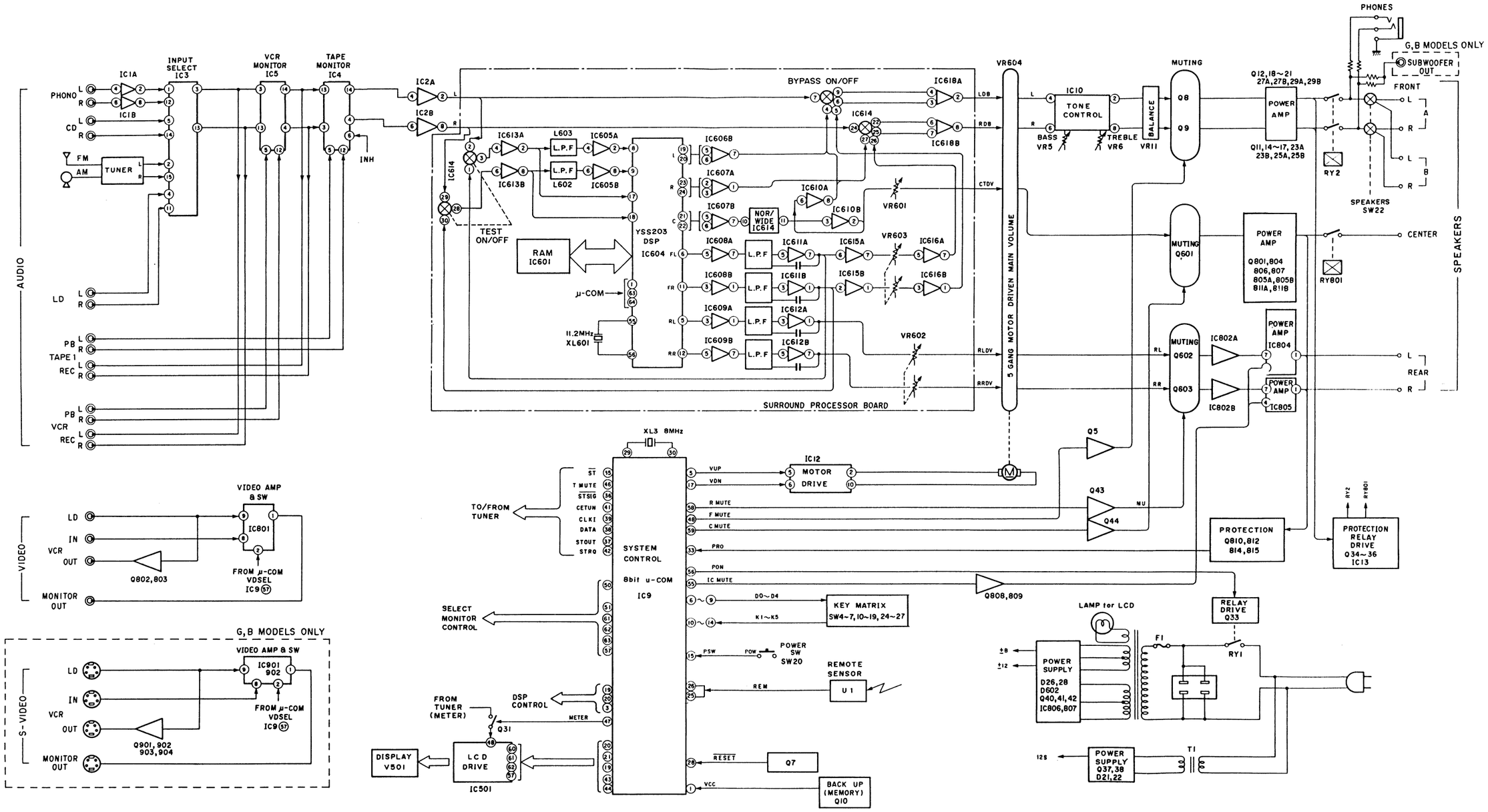

■ BLOCK DIAGRAM

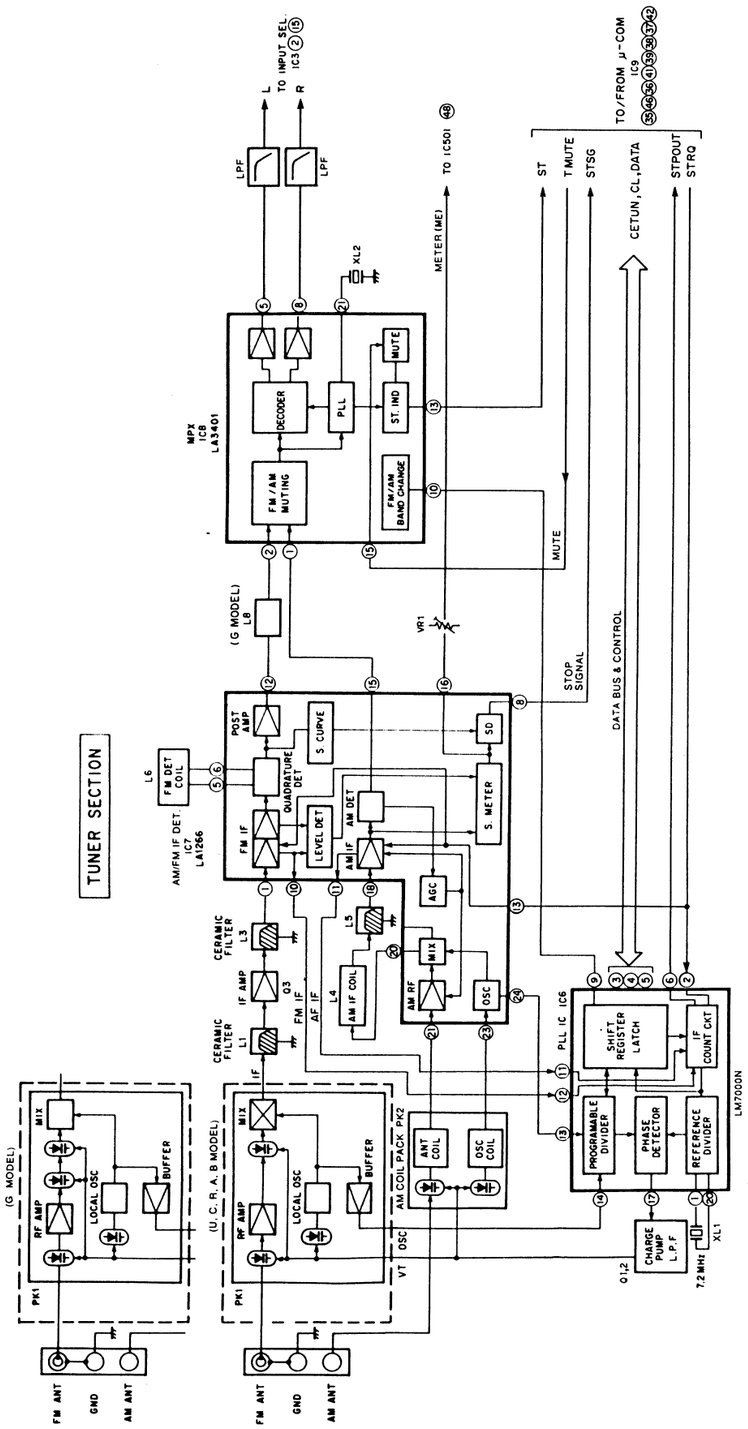

■ FRONT END PACK

● Except G model
PK1 : TFFG2U143A (VP654400)

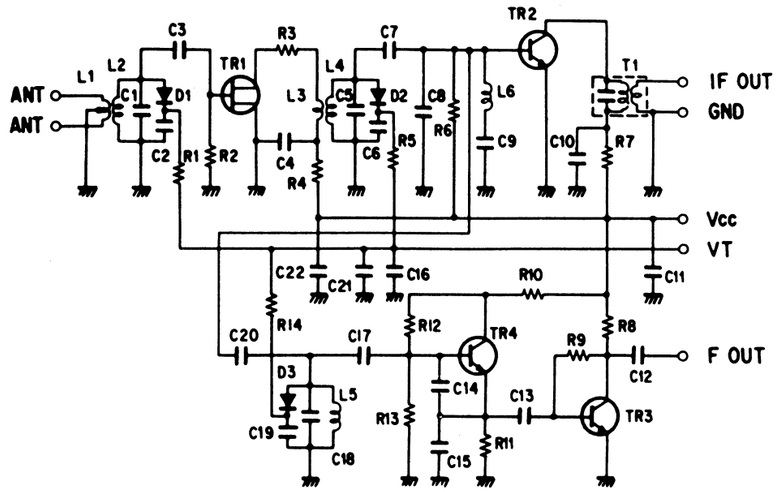

● G model only
PK1 : TFFG4E139A (VP654500)

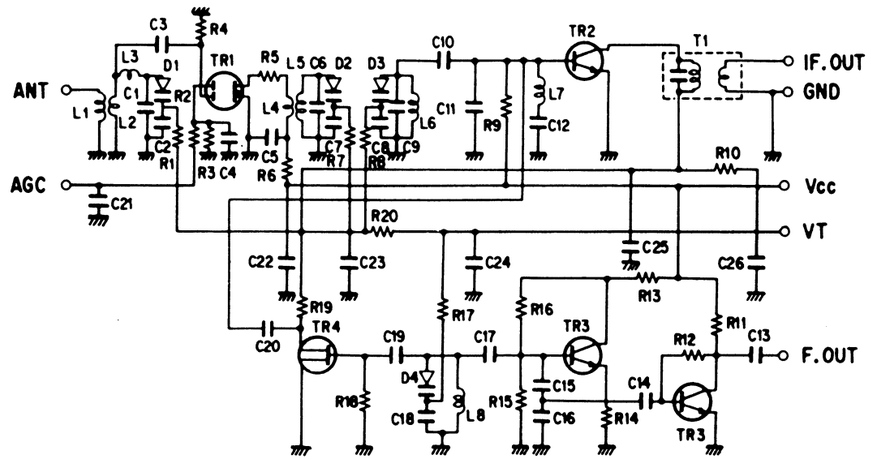

■ IC BLOCK

IC1, 2, 10 : NJM2068S
Dual OP-Amp

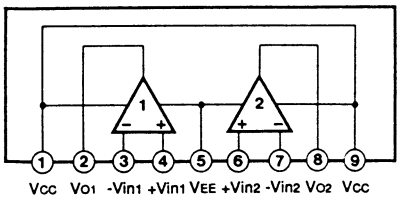

IC501 : LC7582
LCD Driver

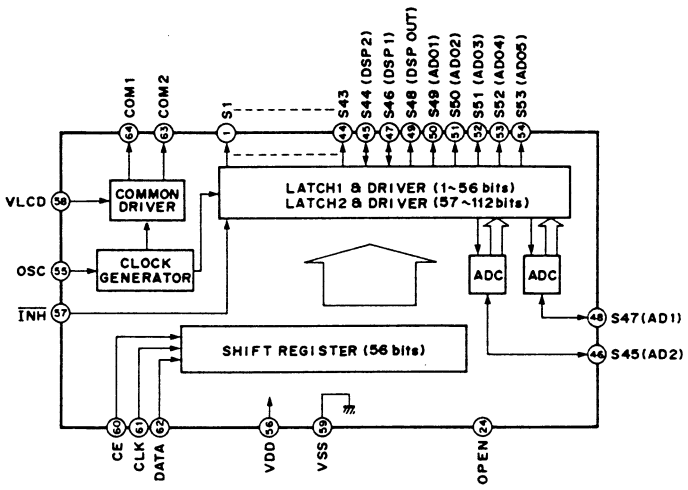

IC3 : TC4052BP or μPD4052BC
Differential 4-Channel Multiplexer/demultiplexer

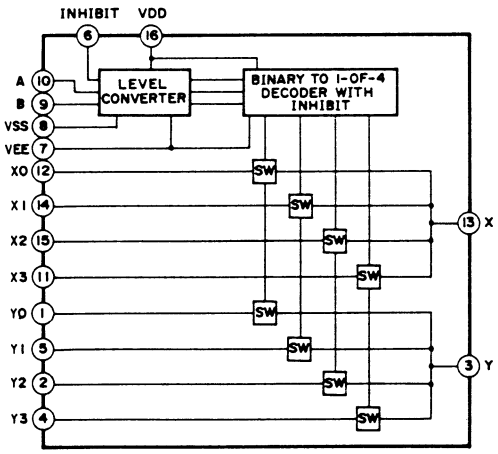

IC4, 5 : TC4053BP or μPD4053BC
Triple-2 Channel Multiplexer/Demultiplexer

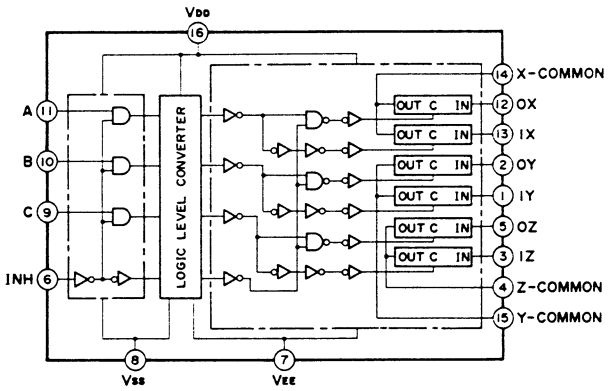

IC6 : LM7000N
PLL

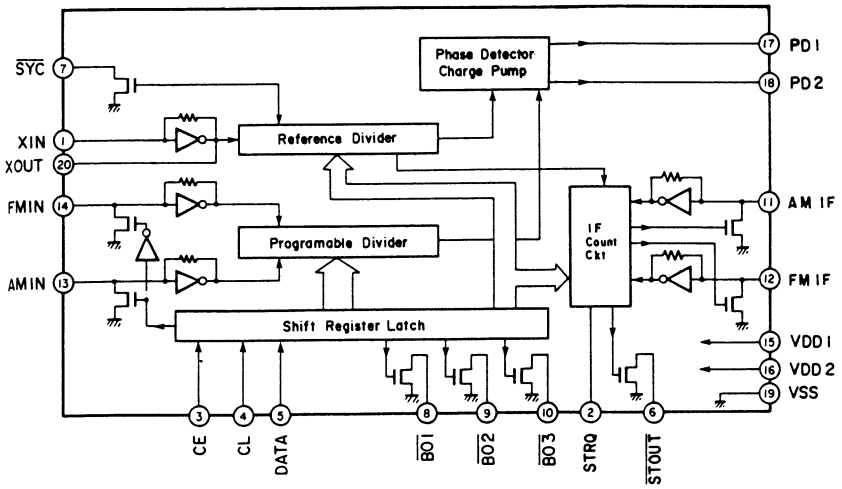

RX-V470

IC7 : LA1266
AM/FM IF

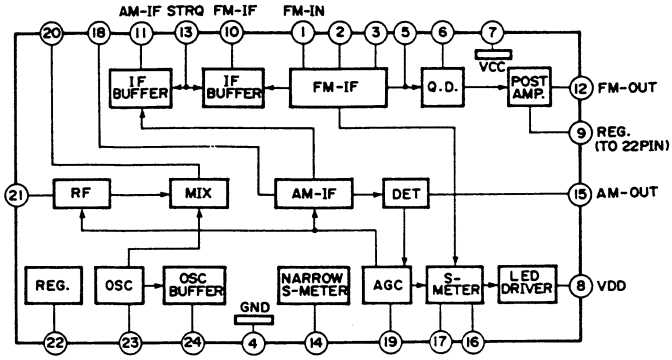

IC12 : LB1641
Motor Driver

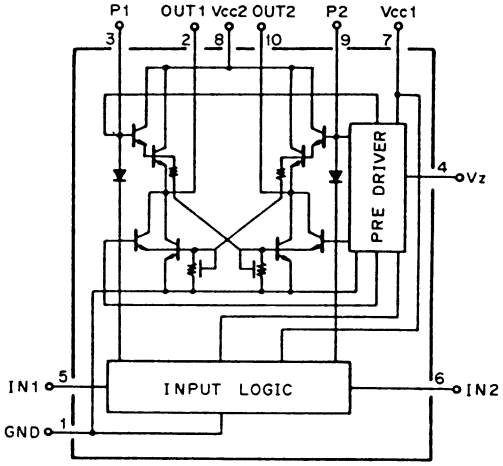

IC13 : μPC1237H
Protection

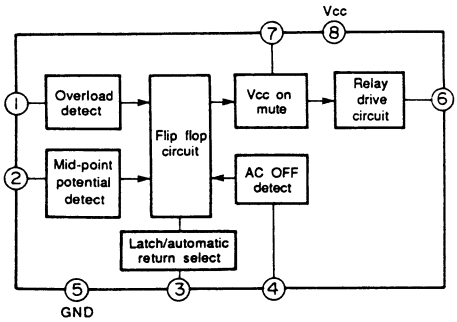

IC8 : LA3401
FM MPX Amp

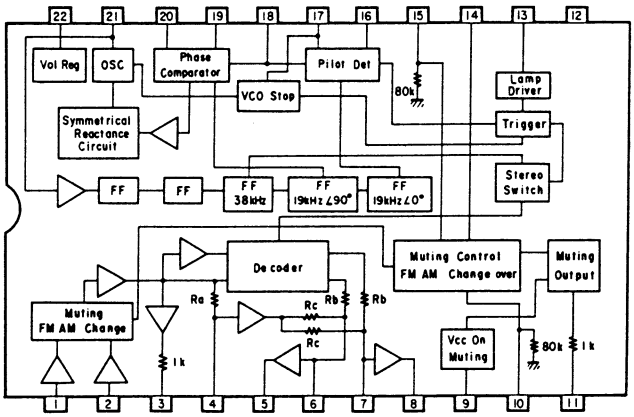

■ SCHEMATIC DIAGRAM (MAIN)

Each voltage given here represents that in the FM (98MHz, 70dBμ, STEREO) reception mode but the one in the parentheses ( ) is that in the AM (1080kHz, 66dBμ) reception mode.

① to ⑥ : WAVEFORM OF TEST POINT (See page 17)

RESISTOR

REMARKS	PARTS NAME
NO MARK	CARBON FILM RESISTOR (1/6W)
⊘	CARBON FILM RESISTOR (1/4W)
△	METAL OXIDE FILM RESISTOR
▲	METAL FILM RESISTOR
⊠	METAL PLATE RESISTOR
◪	FIRE PROOF CARBON FILM RESISTOR
□	CEMENT MOLDED RESISTOR
⊘	SEMI VARIABLE RESISTOR
■	CHIP RESISTOR

CAPACITOR

REMARKS	PARTS NAME	
NO MARK	ELECTROLYTIC CAPACITOR	‖
⊗	TANTALUM CAPACITOR	‖
NO MARK	CERAMIC CAPACITOR	‖
◉	AXIAL LEAD CERAMIC CAPACITOR	‖
◎	POLYESTEL FILM CAPACITOR	‖
○	POLYSTYRENE FILM CAPACITOR	‖
ⓘ	MICA CAPACITOR	‖
ⓟ	POLYPROPYLENE FILM CAPACITOR	‖
●	SEMICONDUCTIVE CERAMIC CAPACITOR	‖

NOTICE
(J)····· Japanese model
(U)····· U.S.A model
(C)····· Canadian model
(A)····· Australian model
(G)····· European model
(B)····· British model
(R)····· General model
(P)····· RP model

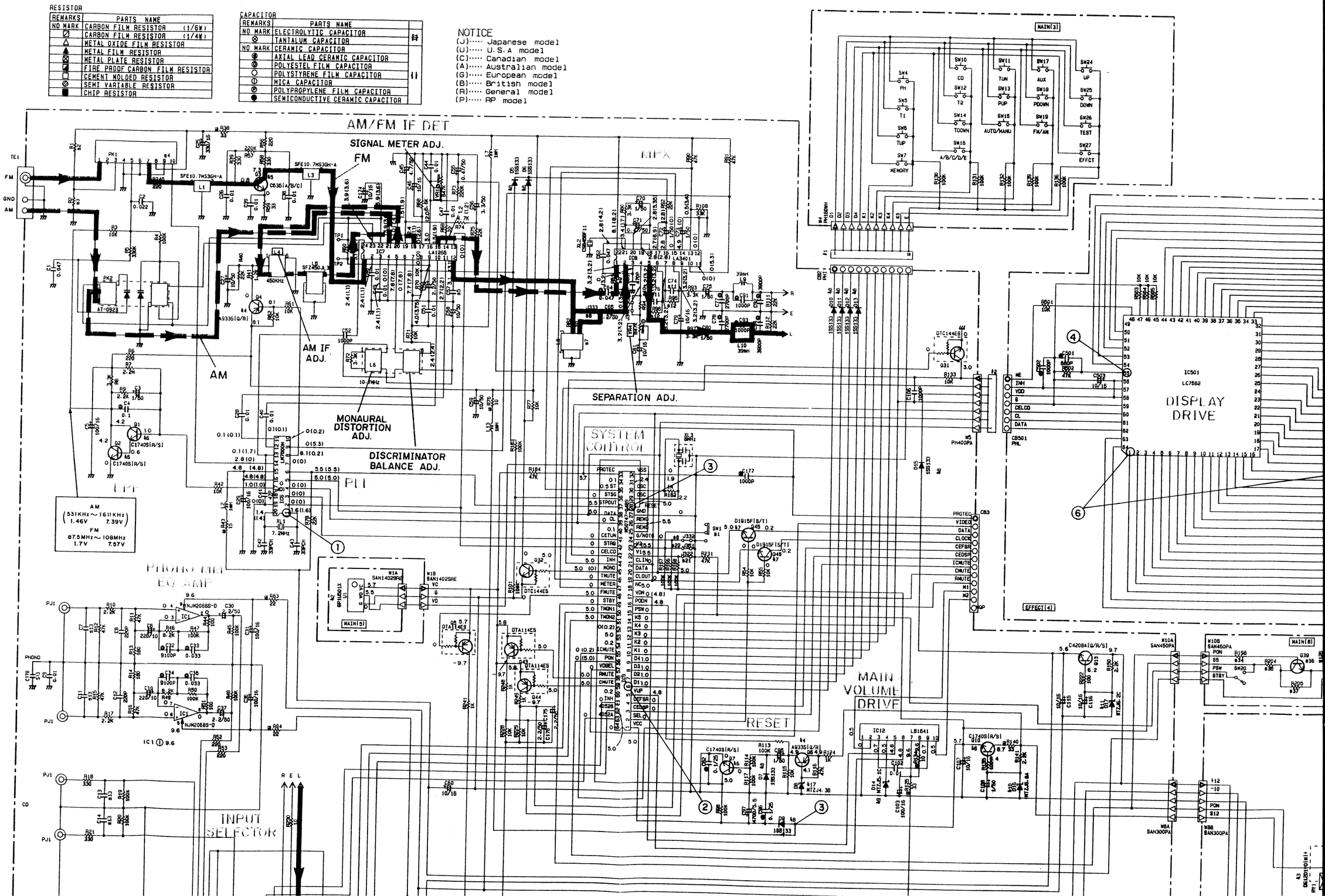

⑥ : WAVEFORM OF TEST POINT (See page 17)

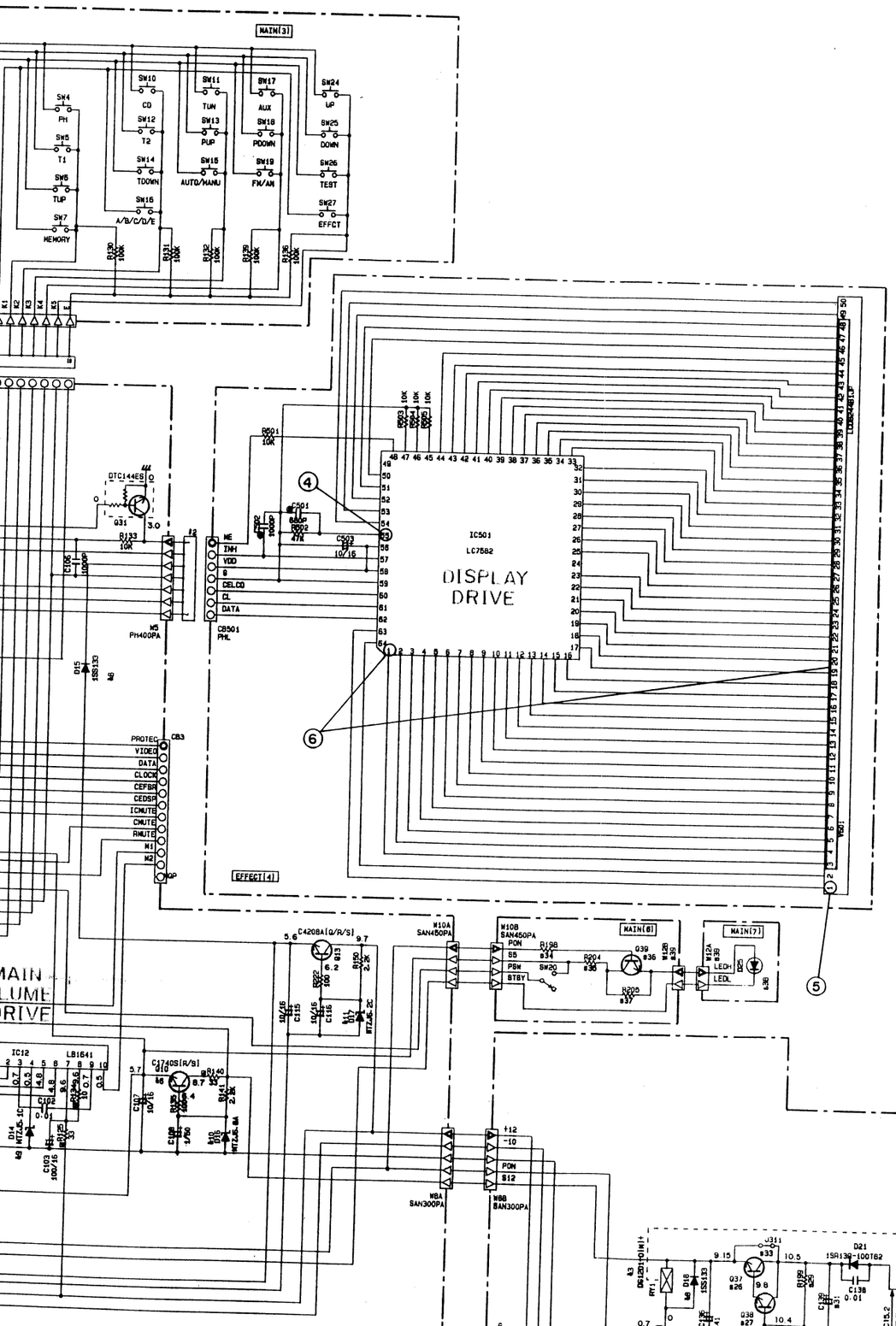

#		U.C	R	A	B	G
1	SW1	X	VF54120	X	X	X
2	R1	X	X	X	X	120K
3	R2	X	X	X	X	100K
4	PK1	VP65440	VP65440	VP65440	VP65440	VP65450
5	C57	100P	100P	100P	100P	X
6	R82	X	X	X	X	4.7K
7	L8	X	X	X	X	GE20053
8	J332.333	○	○	○	○	X
9	R81	10K	10K	10K	10K	22K
10	R94	22K	22K	22K	22K	X
11	C74.75	Ⓜ100P	Ⓜ100P	Ⓟ680P/100	Ⓟ680P/100	Ⓟ390P/100
12	R95.96	68K	68K	68K	68K	120K
13	C7.11.13-24,178	X	X	X	X	220P
14	TE4	X	LA00211	X	X	X
15	C150.152.154.155	X	X	X	X	2200P
16	C145	0.022	X	X	X	0.022
17	C144.146	1500P	X	X	X	1500P
18	C163.164	X	X	X	X	0.01
19	C168	X	X	X	X	0.022
20	R210.211.220	X	X	X	X	2.2
21	J322	○	X	X	X	X
22	J351	X	X	○	○	○
23	C161.162	0.01	X	X	X	0.01
24						
25						
26	Q37	X	C2577[O/P/Y]	X	X	X
27	Q38	X	C3312[R/B/T]	X	X	X
28	D22	X	MTZJ13A HZS12A2TD	X	X	X
29	R199	X	12K	X	X	X
30	C140	X	10/16	X	X	X
31	C139	470/25	470/63	470/25	470/25	470/25
32	J342	X	X	X	X	○
33	J311	○	X	○	○	○
34	R198	X	X	X	X	10K
35	R204	X	X	X	X	270
36	Q39	X	X	X	X	C1740[R/S] C2803[E/F] C3311[O/R/S]
37	R205	X	X	X	X	330
38	D26	X	X	X	X	SLR-34VC3H3
39	W12	X	X	X	X	VM00000
40	R202	2.2	X	X	X	2.2
41	C136	X	10/50	X	X	X
42	C151.153	X	X	X	X	0.01
43	F3	X	X	X	X	T2.5A250V
44	T1	XC083	XC082	XC084	XC084	XC084
45	F1	5A125V	T3.15A250V	T1.6A250V	T1.6A250V	T1.6A250V

#		U.C	R	A	B	G
46						
47	TE2	VK48060	VK48060	X	X	VK48070
48	R221	1/2P2.2M	X	X	X	X
49	F2	X	T1.6A250V	X	X	X
50	SW951	X	VA95180	X	X	X
51	R152.164	470	470	470	470	330
52	W13	X	X	X	VQ05180	VQ05180
53	C141	X	X	X	1000P	1000P
54	C142	X	X	X	0.01	0.01
55	R246	X	X	X	820	820
56	R247	X	X	X	2.2	2.2
57	PJ4	X	X	X	VK43750	VK43750
58	CB17.18	X	X	X	X	LB20188
59	CB951.952	X	LB20188	X	X	X
60	R244.245	X	X	X	10K	10K

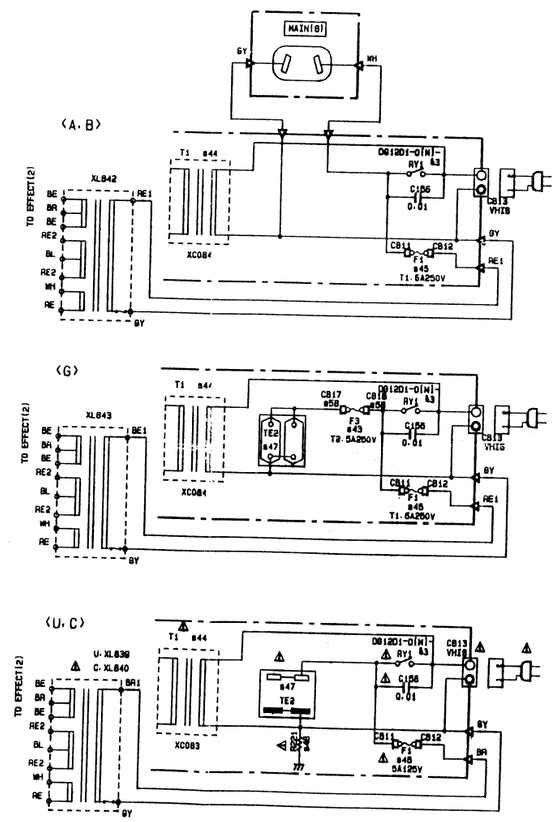

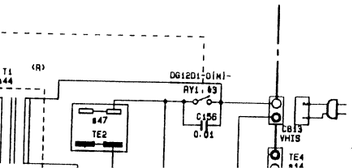

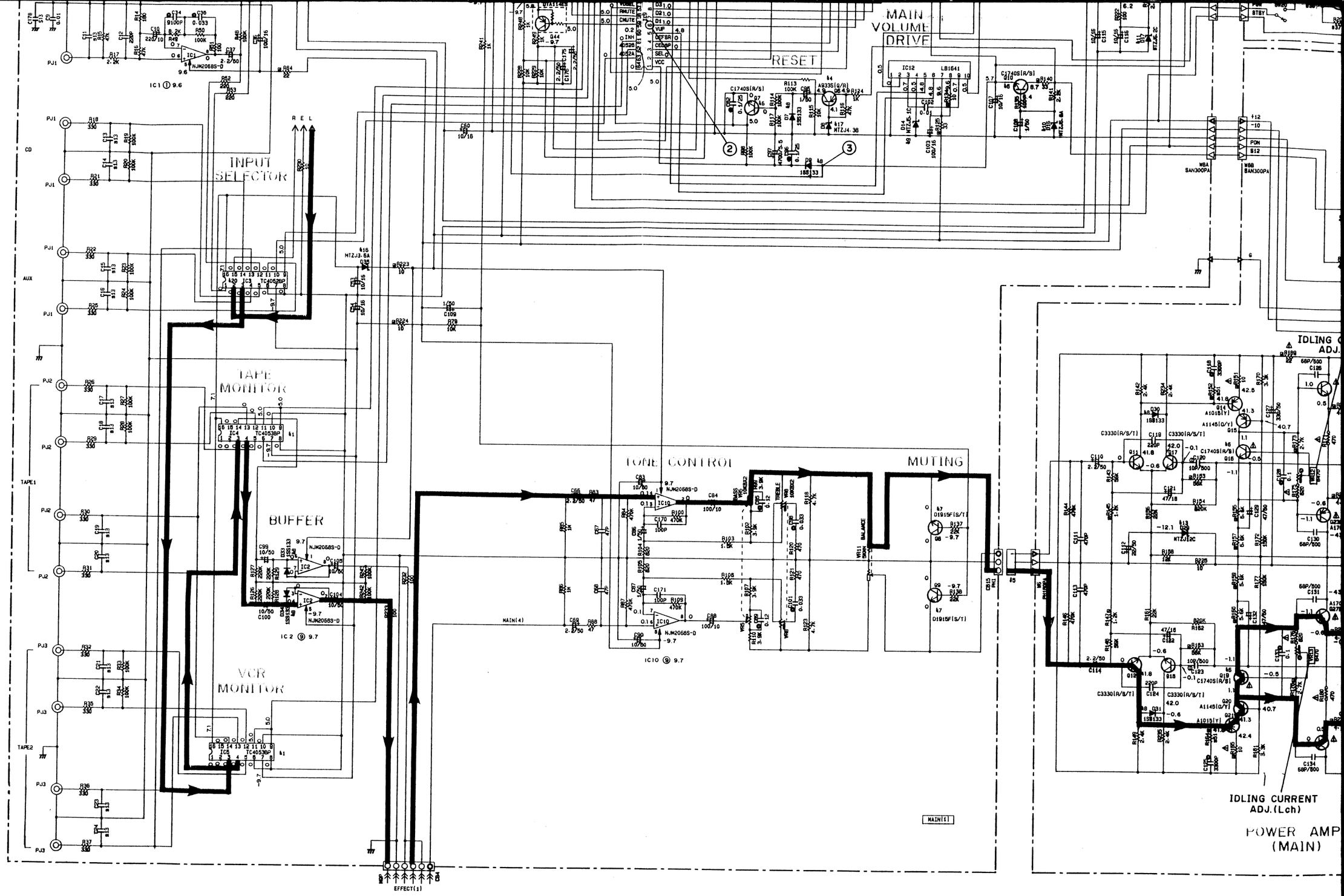

PIN CONNECTION DIAGRAM OF TRANSISTORS, DIODES AND ICS.

2SA933S (Q, R) 2SA1115 (E, F) 2SA1309A (Q, R, S) 2SC1740S (R, S) 2SC3330 (R, S, T) 2SA1145 (O, Y) 2SC1923 (R, O, Y) 2SC1809 (M, N, P) 2SC2878 (A, B) 2SC2603 (E, F)	2SC3311A (Q, R, S) 2SC4208A (Q, R, S) 2SC535 (A, B, C) 2SC3312 (R, S, T) 2SD1915 (S, T) DTA114ES DTC144ES	2SA970 (GR, BL) 2SA1015 (Y) 2SC2240 (GR, BL) 2SA893E	2SB1274 (R, S) 2SC3852	2SC2577 (O, P, Y) 2SA1695 (O, P, Y) 2SC4468 (O, P, Y)	2SA1708 (R, S, T) 2SC4488 (R, S, T)	1SS133 HSS104TD 1SR139-100 1SS270A MTZJ4.3B HZS4C2TD MTZJ5.1C HZS5C2TD MTZJ3.6A HZS4A2TD	MTZJ6.8A HZS7A2TD MTZJ10.0C HZS11A2TD MTZJ6.2C HZS7A2TD MTZJ12.0C HZS12C2TD MTZJ13.0A HZS12A2TD	MTZJ24.0C HZS242TD	D5SB20	μPC1237HA	NJM2068S	LB1641	μPC4053BC TC4053BP TC4052BP μPD4052BC	LM7000N	LA3401	LA1266	M50747

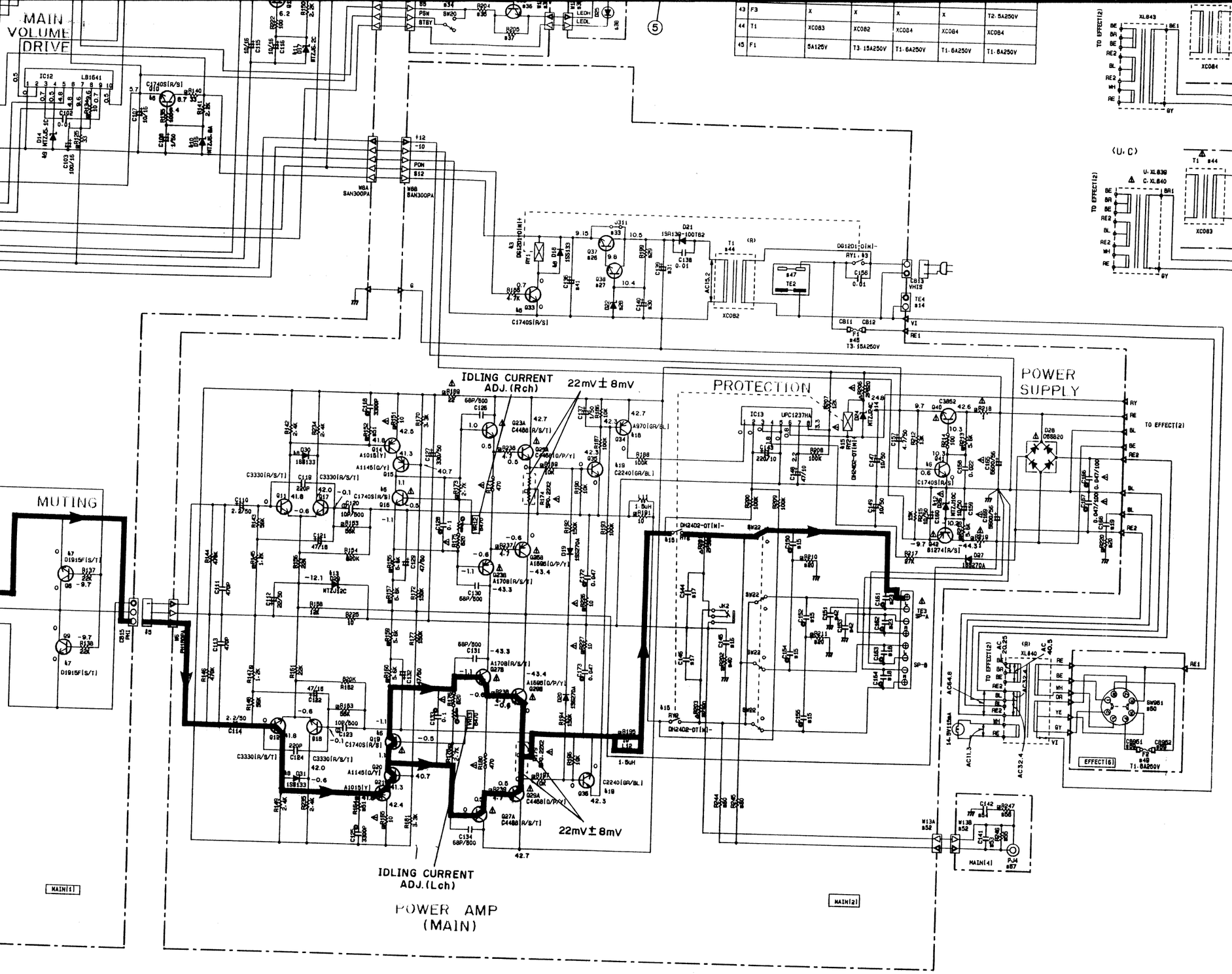

43	F3	X	X	X	X	T2·5A250V
44	T1	XC083	XC082	XC084	XC084	XC084
45	F1	5A125V	T3·15A250V	T1·6A250V	T1·6A250V	T1·6A250V

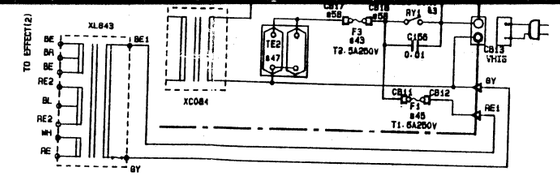

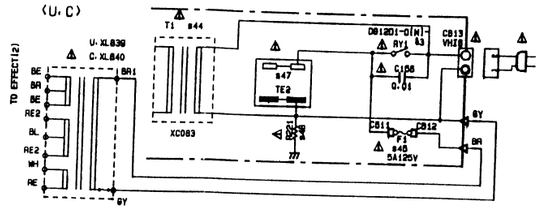

Interchangeable Parts at Manufacture-Stage

Mark	Reference Parts Number	Parts Name
&1	IC4·5	TC4053BP UPD4053BC
&2	U1	GP1U501X GP1U571X
&3	RY1	DG12D1-D[W] DC05P-1
&4	Q4.8	2SA933S[Q/R] 2SA1115[E/F] 2SA1309A[Q/R/S]
&5	Q3	2SC535[A/B/C] 2SC1923[R/GY] 2SC1809[N/P]
&6	Q1·2·7·10·18·19·33·41	2SC1740S[R/S] 2SC2603[E/F] 2SC3311A[Q/R/S]
&7	Q6·9·45·46	2SD1915F[S/T] 2SC287B[A/B]
&8	D5·7·9·13·15·18·30·31 33·34	1SS133 HS81041D
&9	D14	NTZJ5.1C HZS5C2TD
&10	D16	NTZJ6.8A HZS7A2TD
&11	D17	NTZJ6.2C HZS7A2TD
&12	D26	NTZJ10A HZS11A2TD
&13	D29	NTZJ12C HZS12C2TD
&14	D24	NTZJ24C HZS24C2TD
&15	RY2	DH2402-DT[N]-II DH2402-DT[N]
&16	D36	NTZJ3.6A HZS4A2TD
&17	D8	NTZJ4.3B HZS4C2TD
&18	Q34	2SA970[GR/BL] 2SA893[E]
&19	Q35·36	2SC2240[GR/BL] 2SC1890[E]
&20	IC3	TC40528P UPD40528C

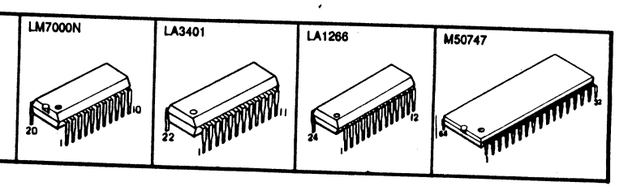

* *All voltage are measured with a 10MΩ/DC electric volt meter.*
* *Components having special characteristics are marked ⚠ and must be replaced with parts having specifications equal to those originally installed.*
* *Schematic diagram is subject to change without notice.*

■ SCHEMATIC DIAGRAM (EFFECT)

⑦ : WAVEFORM OF TEST POINT (See page 17)

IC606, 607, 611, 612, 615, 616 : μPC4570C
IC608, 609 : M5238A
Dual OP-Amp

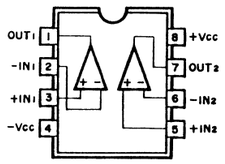

IC605, 610, 613, 618 : μPC4570HA
IC802 : NJM2068S-D
Dual OP-Amp

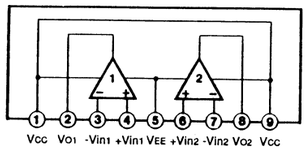

IC801, 901, 902 : LA7956
Video Switch

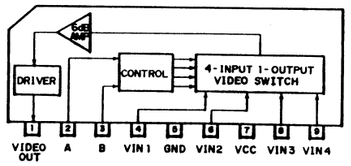

IC614 : LC7823N
Analog Function Switch

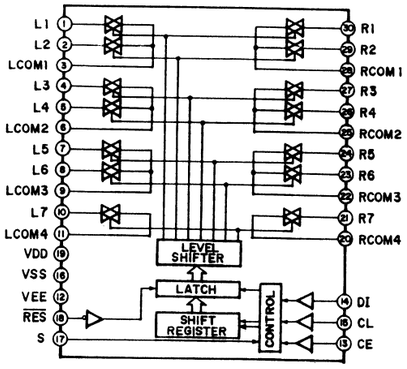

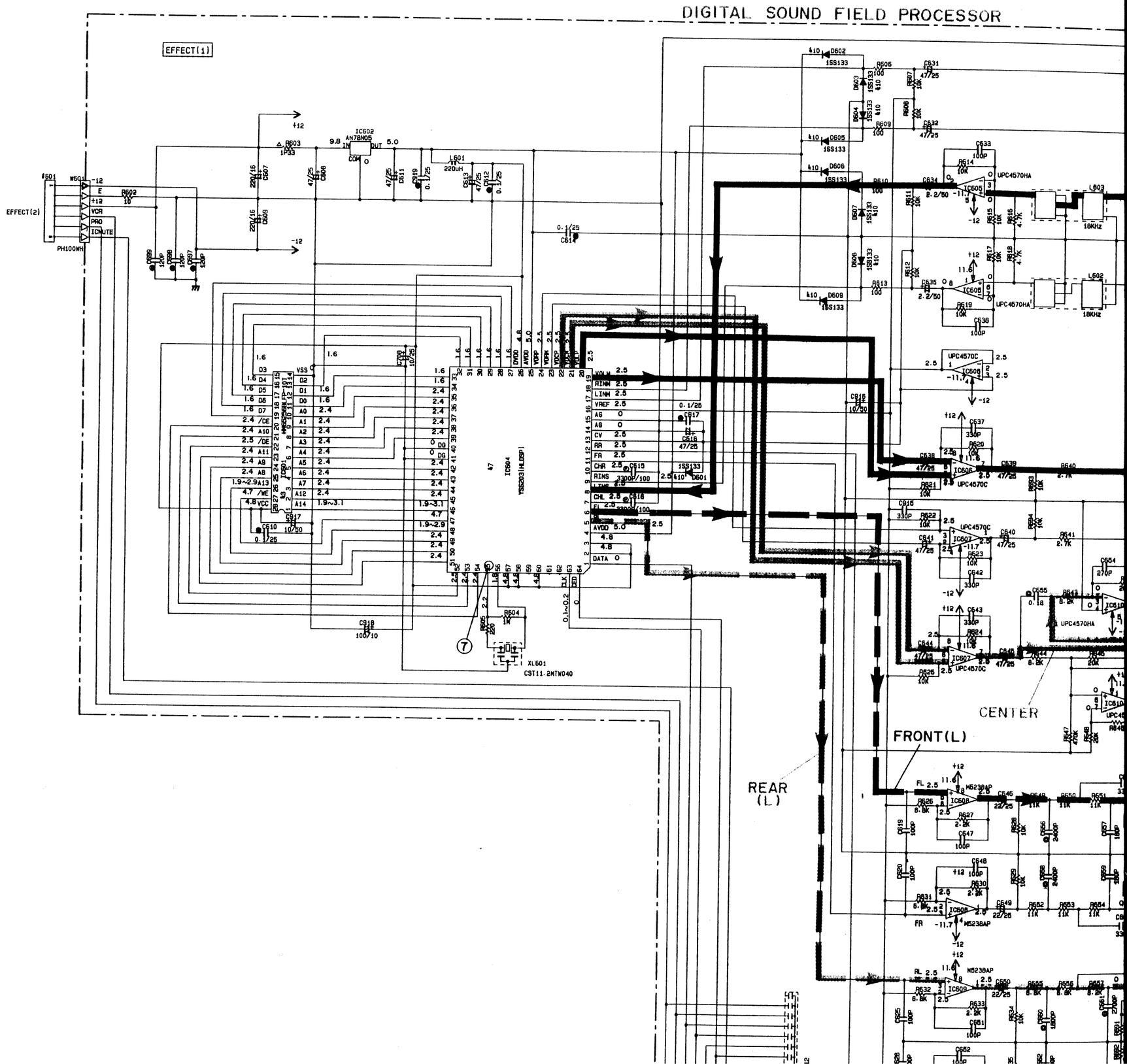

G H I J K L M N

DIGITAL SOUND FIELD PROCESSOR

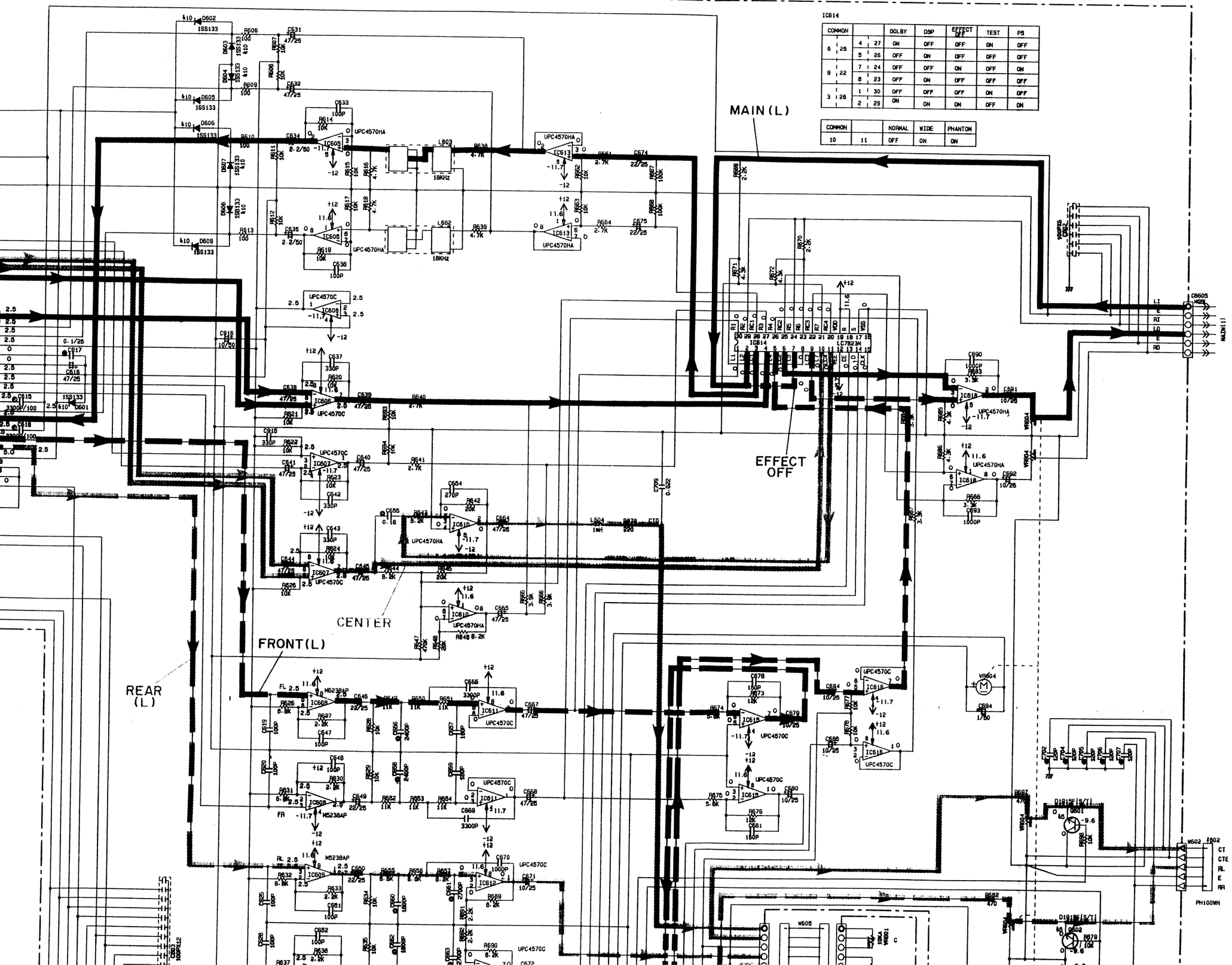

COMMON		DOLBY	DSP	EFFECT OFF	TEST	P5
6 25	4 27	ON	OFF	OFF	ON	OFF
	5 26	OFF	ON	OFF	OFF	OFF
9 22	7 24	OFF	OFF	ON	OFF	ON
	8 23	OFF	ON	OFF	OFF	OFF
3 28	1 30	OFF	OFF	OFF	ON	OFF
	2 29	ON	ON	ON	OFF	ON

COMMON		NORMAL	WIDE	PHANTOM
10	11	OFF	ON	ON

PIN CONNECTION DIAGRAM OF TRANSISTORS, DIODES AND ICS.

2SA893A (D, E)
2SA1115 (E, F)
2SA933S (Q, R)
2SA1309A (Q, R, S)
2SC1740S (R, S)
2SC3312 (R, S, T)
2SC3330 (R, S, T)
2SD1915 (F) (S, T)
2SC2878A, B

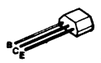

2SA970 (GR, BL)
2SA1015 (Y)
2SC1815 (Y)
2SC2240 (GR, BL)
2SC1890 (E)

2SA1708 (R, S, T)
2SC4488 (R, S, T)

2SA1694 (O, P, Y)
2SC4467 (O, P, Y)

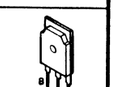

AN78N05

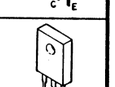

AN78M12F
NJM78M12FA

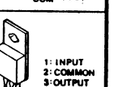

AN79M12F
NJM79M12FA

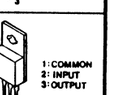

1SS133
HSS104TD
1SS270A
MTZJ24.0C
HZS242TD

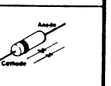

D3SBA20

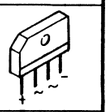

M5238A

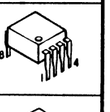

µPC4570C

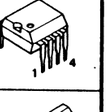

µPC4570HA

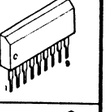

NJM2068S-D
LA7956

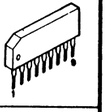

µPC1188H

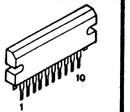

HM65256BLFP-10T
TC51832FL-10
TC51832AFL-10

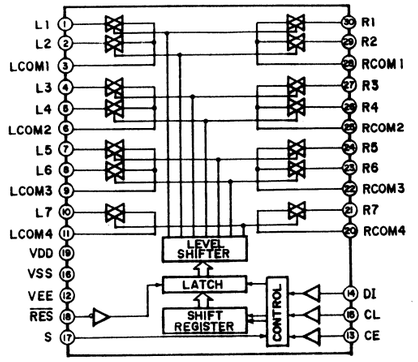

IC601 : HM65256BLFP-10T, TC51832FL-10 or TC51832AFL-10
32768-word x 8-bit High Speed Pseudo Static RAM

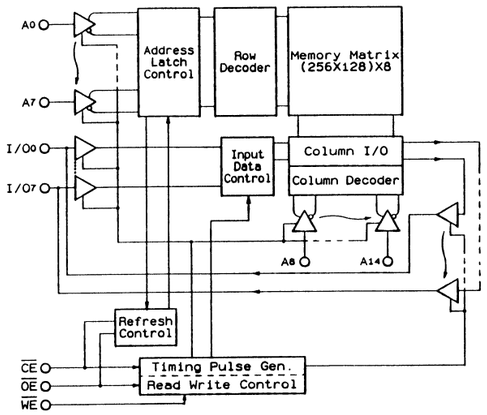

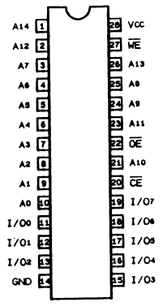

IC804, 805 : μPC1188H
Power Amp

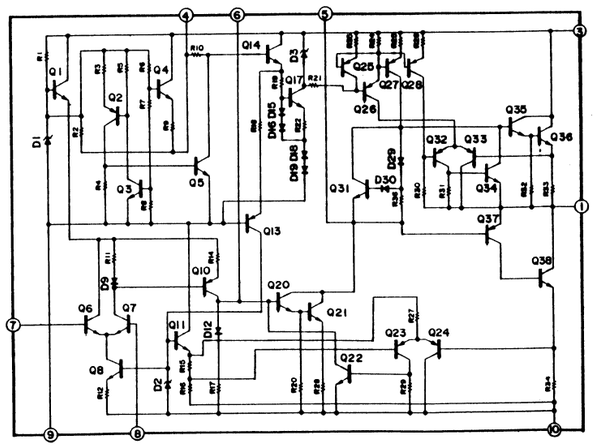

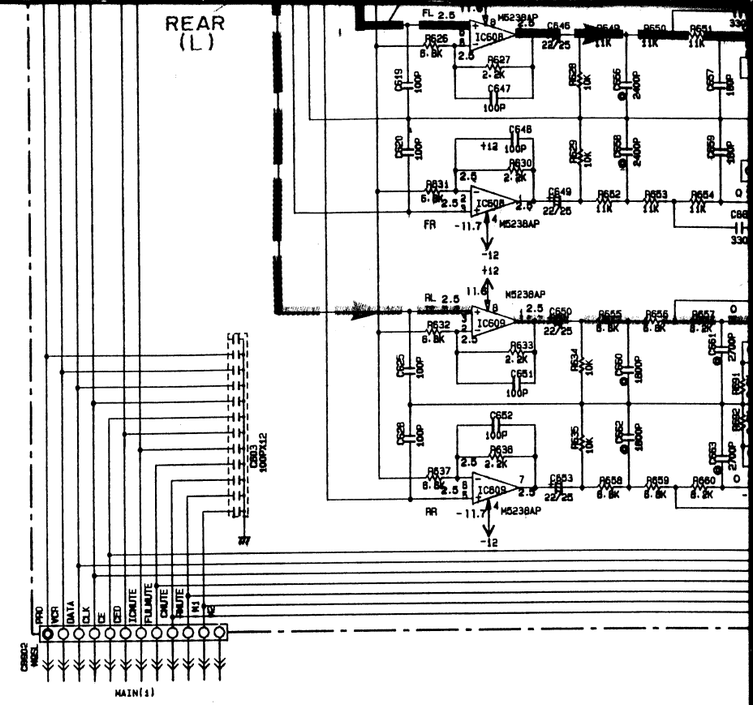

(B. G)

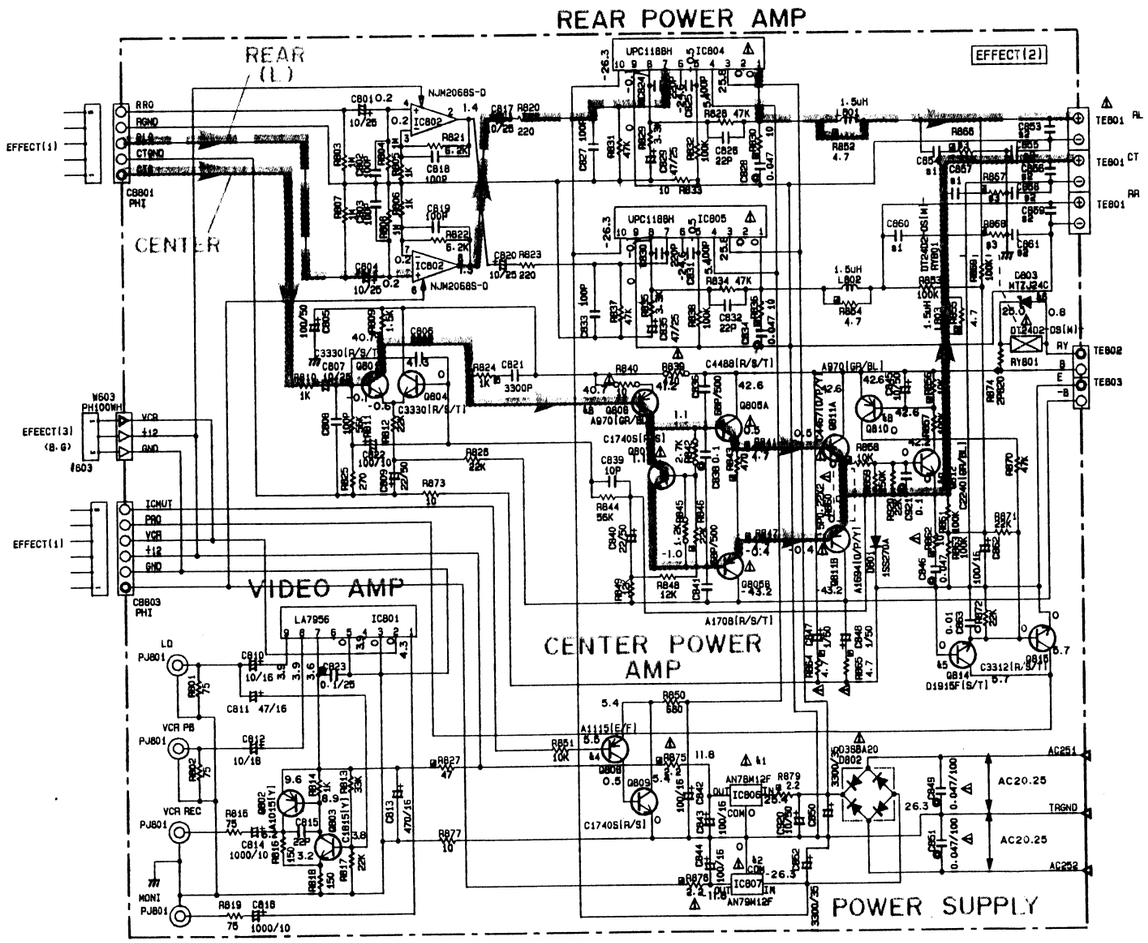

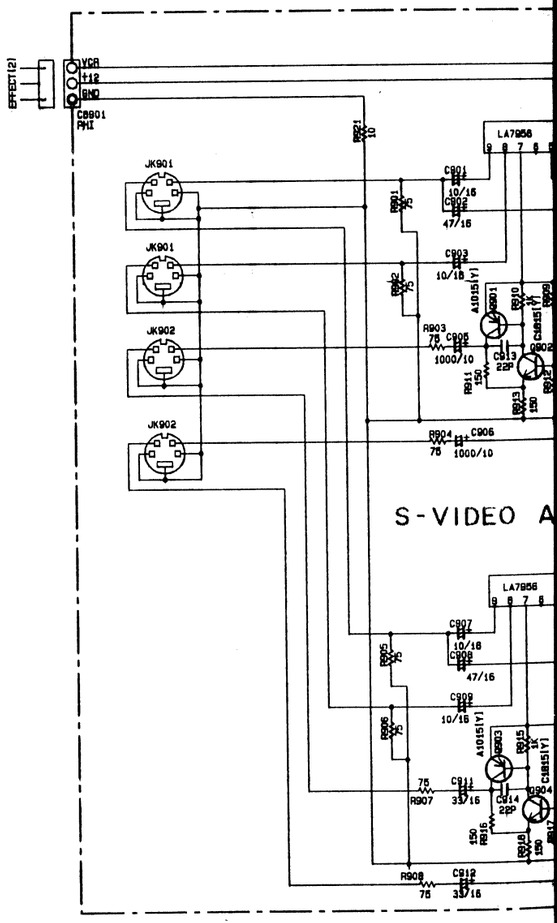

 Yamaha 1052

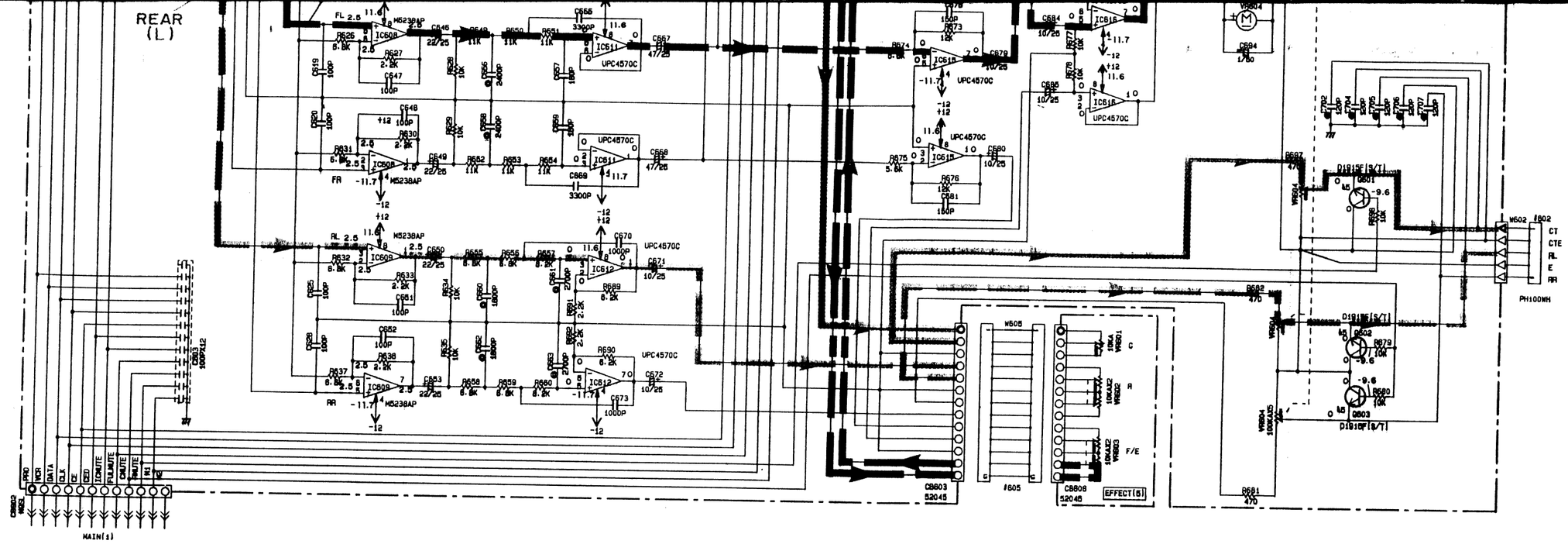

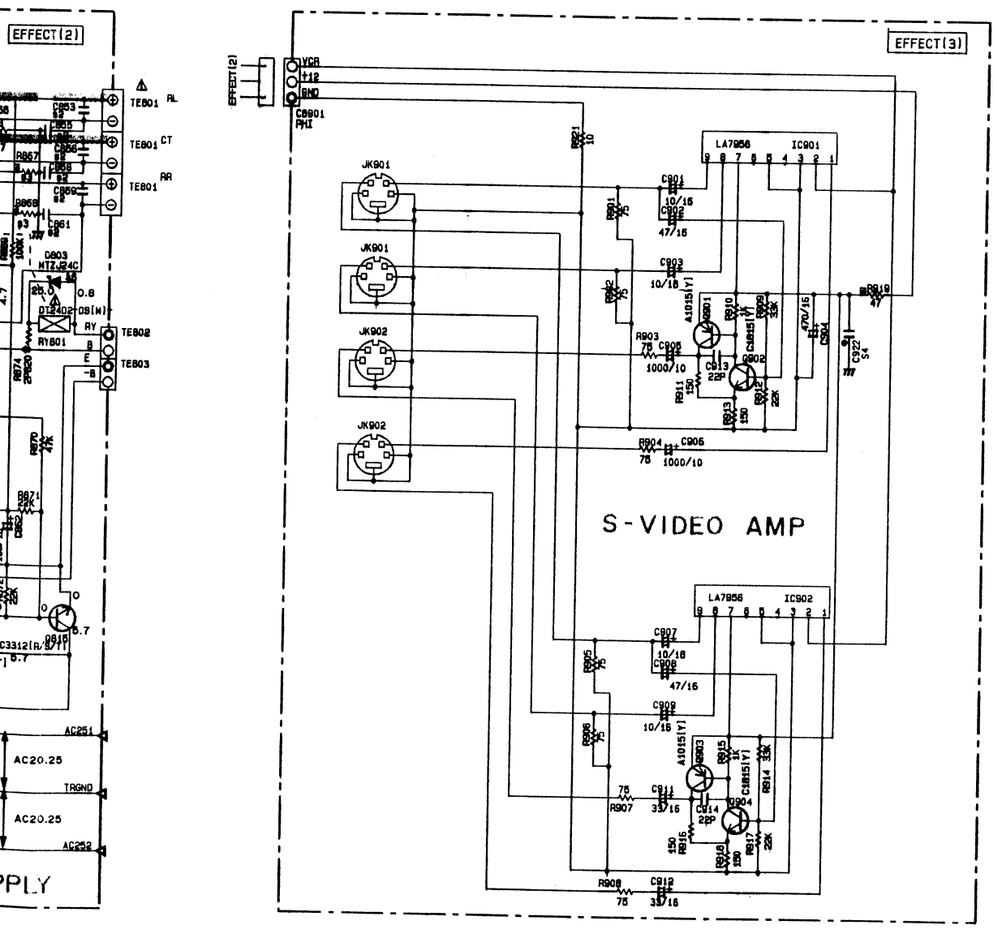

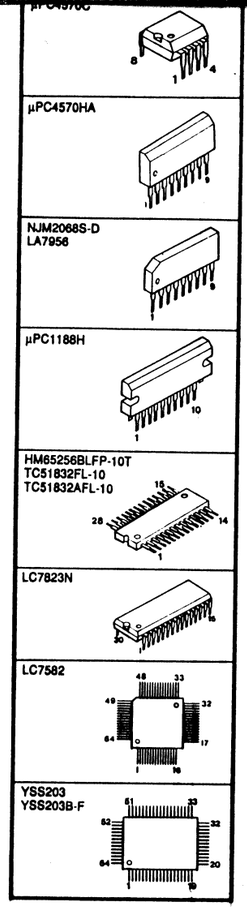

Interchangeable Parts at Manufacture-Stage

Mark	Reference Parts Number	Parts Name
&1	IC806	AN78M12F NJM78M12FA
&2	IC807	AN79M12F NJM79M12FA
&3	IC601	HM65256BLFP-10T TC51832FL-10 TC51832AFL-10
&4	Q808	2SA1115[E/F] 2SA933S[Q/R] 2SA1309A[Q/R/S]
&5	Q601-603, 814	2SD1915F[S/T] 2SC2878[A/B]
&6	D803	MTZJ24C HZ8242TD
&7	IC604	YSS203[HLDSP] YSS203B-F
&8	Q805, 810	2SA970[GR/BL] 2SA933A[D/E]
&9	Q812	2SC2240[GR/BL] 2SC18090[E]
&10	D601-609	1SS133 HSS104TD

NOTICE
(J)····· Japanese model
(U)····· U.S.A model
(C)····· Canadian model
(A)····· Australian model
(G)····· European model
(B)····· British model
(R)····· General model
(P)····· RP model

RESISTOR

REMARKS	PARTS NAME
NO MARK	CARBON FILM RESISTOR (1/6W)
⊘	CARBON FILM RESISTOR (1/4W)
△	METAL OXIDE FILM RESISTOR
▲	METAL FILM RESISTOR
⊠	METAL PLATE RESISTOR
◪	FIRE PROOF CARBON FILM RESISTOR
□	CEMENT MOLDED RESISTOR
⊘	SEMI VARIABLE RESISTOR
■	CHIP RESISTOR

CAPACITOR

REMARKS	PARTS NAME	
NO MARK	ELECTROLYTIC CAPACITOR	⏚
⊗	TANTALUM CAPACITOR	⏚
NO MARK	CERAMIC CAPACITOR	⏚
◉	AXIAL LEAD CERAMIC CAPACITOR	⏚
◉	POLYESTEL FILM CAPACITOR	⏚
○	POLYSTYRENE FILM CAPACITOR	⏚
⊕	MICA CAPACITOR	⏚
◉	POLYPROPYLENE FILM CAPACITOR	⏚
●	SEMICONDUCTIVE CERAMIC CAPACITOR	⏚

#		U.C	R	A	B	G
1	C854, 857, 860	X	X	X	X	2200P
2	C853, 855, 856, 858, 859, 861	X	X	X	X	0.01
3	R866-868	X	X	X	X	2.2
4	C922	X	X	X	0.1/25	0.1/25

** All voltage are measured with a 10MΩ/DC electric volt meter.*
** Components having special characteristics are marked ⚠ and must be replaced with parts having specifications equal to those originally installed.*
** Schematic diagram is subject to change without notice.*

PARTS LIST

■ ELECTRICAL PARTS

■ **WARNING**
Components having special characteristics are marked ⚠ and must be replaced with parts having specifications equal to those originally installed.

● Carbon resistors (1/6W or 1/4W) are not included in the ELECTRICAL PARTS List. For the parts No. of the carbon resistors, refer to last page.

ABBREVIATIONS IN THIS LIST ARE AS FOLLOWS :

C.A.EL.CHP	:	CHIP ALUMI. ELECTROLYTIC CAP
C.CE	:	CERAMIC CAP
C.CE.ARRAY	:	CERAMIC CAP ARRAY
C.CE.CHP	:	CHIP CERAMIC CAP
C.CE.ML	:	MULTILAYER CERAMIC CAP
C.CE.M.CHP	:	CHIP MULTILAYER CERAMIC CAP
C.CE.SAFTY	:	RECOGNIZED CERAMIC CAP
C.CE.TUBLR	:	CERAMIC TUBULAR CAP
C.CE.SMI	:	SEMI CONDUCTIVE CERAMIC CAP
C.EL	:	ELECTROLYTIC CAP
C.MICA	:	MICA CAP
C.ML.FLM	:	MULTILAYER FILM CAP
C.MP	:	METALLIZED PAPER CAP
C.MYLAR	:	MYLAR FILM CAP
C.MYLAR.ML	:	MULTILAYER MYLAR FILM CAP
C.PAPER	:	PAPER CAPACITOR
C.PLS	:	POLYSTYRENE FILM CAP
C.POL	:	POLYESTER FILM CAP
C.POLY	:	POLYETHYLENE FILM CAP
C.PP	:	POLYPROPYLENE FILM CAP
C.TNTL	:	TANTALUM CAP
C.TNTL.CHP	:	CHIP TANTALUM CAP
C.TRIM	:	TRIMMER CAP
CN	:	CONNECTOR
CN.BS.PIN	:	CONNECTOR, BASE PIN
CN.CANNON	:	CONNECTOR, CANNON
CN.DIN	:	CONNECTOR, DIN
CN.FLAT	:	CONNECTOR, FLAT CABLE
CN.POST	:	CONNECTOR, BASE POST
COIL.MX.AM	:	COIL, AM MIX
COIL.AT.FM	:	COIL, FM ANTENNA
COIL.DT.FM	:	COIL, FM DETECT
COIL.MX.FM	:	COIL, FM MIX
COIL.OUTPT	:	OUTPUT COIL
DIOD.ARRAY	:	DIODE ARRAY
DIODE.BRG	:	DIODE BRIDGE
DIODE.CHP	:	CHIP DIODE
DIODE.VAR	:	VARACTOR DIODE
DIOD.Z.CHP	:	CHIP ZENER DIODE
DIODE.ZENR	:	ZENER DIODE
DSCR.CE	:	CERAMIC DISCRIMINATOR
FER.BEAD	:	FERRITE BEADS
FER.CORE	:	FERRITE CORE
FET.CHP	:	CHIP FET
FL.DSPLY	:	FLUORESCENT DISPLAY
FLTR.CE	:	CERAMIC FILTER
FLTR.COMB	:	COMB FILTER MODULE
FLTR.LC.RF	:	LC FILTER ,EMI
GND.MTL	:	GROUND PLATE
GND.TERM	:	GROUND TERMINAL
HOLDER.FUS	:	FUSE HOLDER
IC.PRTCT	:	IC PROTECTOR
JUMPER.CN	:	JUMPER CONNECTOR
JUMPER.TST	:	JUMPER, TEST POINT
L.DTCT	:	LIGHT DETECTING MODULE
L.EMIT	:	LIGHT EMITTING MODULE
LED.DSPLY	:	LED DISPLAY
LED.INFRD	:	LED, INFRARED
MODUL.RF	:	MODULATOR, RF
PHOT.CPL	:	PHOTO COUPLER
PHOT.INTR	:	PHOTO INTERRUPTER
PHOT.RFLCT	:	PHOTO REFLECTOR
PIN.TEST	:	PIN, TEST POINT
PLST.RIVET	:	PLASTIC RIVET
R.ARRAY	:	RESISTOR ARRAY
R.CAR	:	CARBON RESISTOR
R.CAR.CHP	:	CHIP RESISTOR
R.CAR.FP	:	FLAME PROOF CARBON RESISTOR
R.FUS	:	FUSABLE RESISTOR
R.MTL.CHP	:	CHIP METAL FILM RESISTOR
R.MTL.FLM	:	METAL FILM RESISTOR
R.MTL.OXD	:	METAL OXIDE FILM RESISTOR
R.MTL.PLAT	:	METAL PLATE RESISTOR
RSNR.CE	:	CERAMIC RESONATOR
RSNR.CRYS	:	CRYSTAL RESONATOR
R.TW.CEM	:	TWIN CEMENT FIXED RESISTOR
R.WW	:	WIRE WOUND RESISTOR
SCR.BND.HD	:	BIND HEAD B-TITE SCREW
SCR.BW.HD	:	BW HEAD TAPPING SCREW
SCR.CUP	:	CUP TITE SCREW
SCR.TERM	:	SCREW TERMINAL
SCR.TR	:	SCREW, TRANSISTOR
SUPRT.PCB	:	SUPPORT, P.C.B.
SURG.PRTCT	:	SURGE PROTECTOR
SW.TACT	:	TACT SWITCH
SW.LEAF	:	LEAF SWITCH
SW.LEVER	:	LEVER SWITCH
SW.MICRO	:	MICRO SWITCH
SW.PUSH	:	PUSH SWITCH
SW.RT.ENC	:	ROTARY ENCODER
SW.RT.MTR	:	ROTARY SWITCH WITH MOTOR
SW.RT	:	ROTARY SWITCH
SW.SLIDE	:	SLIDE SWITCH
TERM.SP	:	SPEAKER TERMINAL
TERM.WRAP	:	WRAPPING TERMINAL
THRMST.CHP	:	CHIP THERMISTOR
TR.CHP	:	CHIP TRANSISTOR
TR.DGT	:	DIGITAL TRANSISTOR
TR.DGT.CHP	:	CHIP DIGITAL TRANSISTOR
TRANS	:	TRANSFORMER
TRANS.PULS	:	PULSE TRANSFORMER
TRANS.PWR	:	POWER TRANSFORMER ASS'y
TUNER.AM	:	TUNER PACK, AM
TUNER.FM	:	TUNER PACK, FM
TUNER.PK	:	FRONT-END TUNER PACK
VR	:	ROTARY POTENTIOMETER
VR.MTR	:	POTENTIOMETER WITH MOTOR
VR.SW	:	POTENTIOMETER WITH ROTARY SW
VR.SLIDE	:	SLIDE POTENTIOMETER
VR.TRIM	:	TRIMMER POTENTIOMETER

Note) Those parts marked with "#" are not included in the P.C.B. ass'y.

MAIN P. C. B.

Schm Ref.	PART NO.	Description		
*	VP536400	P.C.B.	MAIN(UC)	
*	VP536500	P.C.B.	MAIN(R)	
*	VP536600	P.C.B.	MAIN(A)	
*	VP536700	P.C.B.	MAIN(B)	
*	VP536800	P.C.B.	MAIN(G)	
CB2	VD005300	CN.BS.PIN	PH i-TYPE 10P TE	
CB3	VA252400	CN	MQ 12P	
CB4	Vi377600	CN.BS.PIN	MQ 6P TE	
CB11	LB201880	HOLDER.FUS	PC-FH1	
CB12	LB201880	HOLDER.FUS	PC-FH1	
CB13	VG879900	CN.BS.PIN	VH 2P TE	⚠
CB15	VD004600	CN.BS.PIN	PH 3P TE	
CB17	LB201880	HOLDER.FUS	PC-FH1(G)	
CB18	LB201880	HOLDER.FUS	PC-FH1(G)	
C1	Fi554470	C.CE	0.047uF	50V
C2	UG444220	C.CE	0.022uF	50V
C3	VJ839100	C.EL	1uF	50V
C4	UA655100	C.MYLAR	0.1uF	50V
C5	VF964800	C.EL	100uF	16V
C6	VE117600	C.EL	220uF	10V
C7	FG212220	C.CE	220pF	50V(G)
C8	FG212220	C.CE	220pF	50V
C9	UG444100	C.CE	0.01uF	50V
C10	VE117600	C.EL	220uF	10V
C11	FG212220	C.CE	220pF	50V(G)
C12	FG212220	C.CE	220pF	50V
C13	FG212220	C.CE	220pF	50V(G)
C14	FG212220	C.CE	220pF	50V(G)
C15	FG212220	C.CE	220pF	50V(G)
C16	FG212220	C.CE	220pF	50V(G)
C17	FG212220	C.CE	220pF	50V(G)
C18	FG212220	C.CE	220pF	50V(G)
C19	FG212220	C.CE	220pF	50V(G)
C20	FG212220	C.CE	220pF	50V(G)
C21	FG212220	C.CE	220pF	50V(G)
C22	FG212220	C.CE	220pF	50V(G)
C23	FG212220	C.CE	220pF	50V(G)
C24	FG212220	C.CE	220pF	50V(G)
C25	UJ638330	C.EL	330uF	16V
C26	UG444100	C.CE	0.01uF	50V
C27	UM417100	C.EL	10uF	50V
C28	UG444100	C.CE	0.01uF	50V
C29	VF964800	C.EL	100uF	16V
C30	VJ839200	C.EL	2.2uF	50V
C31	VF964800	C.EL	100uF	16V
C32	UA653910	C.MYLAR	9100pF	50V
C33	UA654330	C.MYLAR	0.033uF	50V
C34	UA653910	C.MYLAR	9100pF	50V
C35	UA654330	C.MYLAR	0.033uF	50V
C36	VF964800	C.EL	100uF	16V
C37	VJ839200	C.EL	2.2uF	50V
C38	UG444100	C.CE	0.01uF	50V
C39	UG444100	C.CE	0.01uF	50V

* New Parts

Schm Ref.	PART NO.	Description		
C40	UG444100	C.CE	0.01uF	50V
C41	VE551500	C.CE	47pF	50V
C42	VA761200	C.CE	33pF	50V
C43	VA761200	C.CE	33pF	50V
C44	UG444100	C.CE	0.01uF	50V
C45	UM416470	C.EL	4.7uF	50V
C46	VJ836900	C.EL	10uF	16V
C47	UG444100	C.CE	0.01uF	50V
C48	UG444100	C.CE	0.01uF	50V
C49	UG444100	C.CE	0.01uF	50V
C50	VJ839200	C.EL	2.2uF	50V
C51	UG444100	C.CE	0.01uF	50V
C52	Fi553100	C.CE	1000pF	50V
C53	VJ836900	C.EL	10uF	16V
C54	VJ836900	C.EL	10uF	16V
C55	VJ839000	C.EL	0.47uF	50V
C56	UM216330	C.EL	3.3uF	50V
C57	VE551900	C.CE	100pF	50V(UCRAB)
C58	UM417100	C.EL	10uF	50V
C59	UM417100	C.EL	10uF	50V
C60	VJ836900	C.EL	10uF	16V
C62	Fi554470	C.CE	0.047uF	50V
C63	FG212470	C.CE	470pF	50V
C64	UA654470	C.MYLAR	0.047uF	50V
C65	VD916400	C.EL	2.2uF	50V
C66	VJ839200	C.EL	2.2uF	50V
C67	VE551500	C.CE	47pF	50V
C68	VE551500	C.CE	47pF	50V
C69	VJ839200	C.EL	2.2uF	50V
C70	VJ839100	C.EL	1uF	50V
C71	VJ839000	C.EL	0.47uF	50V
C72	VJ839100	C.EL	1uF	50V
C73	VJ839100	C.EL	1uF	50V
C74	UA653110	C.MYLAR	1100pF	50V(UCR)
C74	UT452390	C.PP	390pF	100V(G)
C74	UT452680	C.PP	680pF	100V(AB)
C75	VJ839100	C.EL	1uF	50V
C76	UA653110	C.MYLAR	1100pF	50V(UCR)
C76	UT452390	C.PP	390pF	100V(G)
C76	UT452680	C.PP	680pF	100V(AB)
C77	UA653270	C.MYLAR	2700pF	50V
C78	UA653270	C.MYLAR	2700pF	50V
C79	VJ836900	C.EL	10uF	16V
C80	VJ839100	C.EL	1uF	50V
C81	VJ836900	C.EL	10uF	16V
C82	VD930900	C.CE.SMI	0.1uF	25V
C83	UM417100	C.EL	10uF	50V
C84	VF760000	C.EL	100uF	10V
C85	UA655120	C.MYLAR	0.12uF	50V
C86	VJ839100	C.EL	1uF	50V
C87	VJ839100	C.EL	1uF	50V
C88	VF760000	C.EL	100uF	10V
C89	UA655120	C.MYLAR	0.12uF	50V

* New Parts

MAIN P. C. B.

Schm Ref.	PART NO.	Description		
C90	UM417100	C.EL	10uF	50V
C91	UA653100	C.MYLAR	1000pF	50V
C92	UA653390	C.MYLAR	3900pF	50V
C93	UA653100	C.MYLAR	1000pF	50V
C94	UA653390	C.MYLAR	3900pF	50V
C95	VJ839100	C.EL	1uF	50V
C96	VD930900	C.CE.SMI	0.1uF	25V
C97	VF992600	C.EL	4700uF	5.5V
C98	UA654330	C.MYLAR	0.033uF	50V
C99	UM417100	C.EL	10uF	50V
C100	UM417100	C.EL	10uF	50V
C101	UA654330	C.MYLAR	0.033uF	50V
C102	UG444100	C.CE	0.01uF	50V
C103	VF964800	C.EL	100uF	16V
C104	UM417100	C.EL	10uF	50V
C105	UM417100	C.EL	10uF	50V
C106	Fi553100	C.CE	1000pF	50V
C107	VJ836900	C.EL	10uF	16V
C108	VJ839100	C.EL	1uF	50V
C109	VJ839100	C.EL	1uF	50V
C110	VJ839200	C.EL	2.2uF	50V
C111	FG212470	C.CE	470pF	50V
C112	Ui367220	C.EL	22uF	50V
C113	FG212470	C.CE	470pF	50V
C114	VJ839200	C.EL	2.2uF	50V
C115	VJ836900	C.EL	10uF	16V
C116	VJ836900	C.EL	10uF	16V
C118	UA653330	C.MYLAR	3300pF	50V
C119	FG212220	C.CE	220pF	50V
C120	FU451100	C.MICA	10pF	500V
C121	VJ837200	C.EL	47uF	16V
C122	VJ837200	C.EL	47uF	16V
C123	FU451100	C.MICA	10pF	500V
C124	FG212220	C.CE	220pF	50V
C125	UA653330	C.MYLAR	3300pF	50V
C126	VN715700	C.CE	68pF	500V
C127	UJ468330	C.EL	330uF	50V
C128	UA655100	C.MYLAR	0.1uF	50V
C129	UJ667470	C.EL	47uF	50V
C130	VN715700	C.CE	68pF	500V
C131	VN715700	C.CE	68pF	500V
C132	UJ667470	C.EL	47uF	50V
C133	UA655100	C.MYLAR	0.1uF	50V
C134	VN715700	C.CE	68pF	500V
C136	UM417100	C.EL	10uF	50V(R)
C137	VJ839100	C.EL	1uF	50V
C138	UG444100	C.CE	0.01uF	50V
C139	UJ648470	C.EL	470uF	25V(UCABG)
C139	VK347900	C.EL	470uF	63V(R)
C140	VJ836900	C.EL	10uF	16V(R)
C141	Fi553100	C.CE	1000pF	50V(BG)
C142	UG444100	C.CE	0.01uF	50V(BG)
C143	VE117600	C.EL	220uF	10V

* New Parts

Schm Ref.	PART NO.	Description			
C144	FG213150	C.CE	1500pF	50V(UCG)	
C145	UG444220	C.CE	0.022uF	50V(UCG)	
C146	FG213150	C.CE	1500pF	50V(UCG)	
C147	UM417100	C.EL	10uF	50V	
C148	VJ837200	C.EL	47uF	16V	
C149	UM417100	C.EL	10uF	50V	
C150	UA653220	C.MYLAR	2200pF	50V(G)	
C151	UG444100	C.CE	0.01uF	50V(G)	
C152	UA653220	C.MYLAR	2200pF	50V(G)	
C153	UG444100	C.CE	0.01uF	50V(G)	
C154	UA653220	C.MYLAR	2200pF	50V(G)	
C155	UA653220	C.MYLAR	2200pF	50V(G)	
C156	Fi514100	C.CE.SAFTY	0.01uF	VA-1	⚠
C157	UM416470	C.EL	4.7uF	50V	
C158	UG444220	C.CE	0.022uF	50V	
C159	UM417100	C.EL	10uF	50V	
C160	UM417100	C.EL	10uF	50V	
C161	UA654100	C.MYLAR	0.01uF	50V(UCG)	
C162	UA654100	C.MYLAR	0.01uF	50V(UCG)	
C163	UA654100	C.MYLAR	0.01uF	50V(G)	
C164	UA654100	C.MYLAR	0.01uF	50V(G)	
C165	VK043200	C.EL	5600uF	56V	⚠
C166	Vi862100	C.POL.MTL	0.047uF	100V	⚠
C167	Vi862100	C.POL.MTL	0.047uF	100V	⚠
C168	UG444220	C.CE	0.022uF	50V(G)	
C169	VK043200	C.EL	5600uF	56V	⚠
C170	VE551900	C.CE	100pF	50V	
C171	VE551900	C.CE	100pF	50V	
C172	UA654470	C.MYLAR	0.047uF	50V	
C173	UA654470	C.MYLAR	0.047uF	50V	
C174	VJ836900	C.EL	10uF	16V	
C175	VJ839200	C.EL	2.2uF	50V	
C176	VJ839200	C.EL	2.2uF	50V	
C177	VF467000	C.CE.TUBLR	1000pF	50V	
C178	UG444100	C.CE	0.01uF	50V(G)	
D5	iF004600	DIODE	1SS133		
D6	iF004600	DIODE	1SS133		
D7	iF004600	DIODE	1SS133		
D8	VG436800	DIODE.ZENR	MTZJ4.3B	4.3V	
D9	iF004600	DIODE	1SS133		
D10	iF004600	DIODE	1SS133		
D11	iF004600	DIODE	1SS133		
D12	iF004600	DIODE	1SS133		
D13	iF004600	DIODE	1SS133		
D14	VG437500	DIODE.ZENR	MTZJ5.1C	5.1V	
D15	iF004600	DIODE	1SS133		
D16	VG438200	DIODE.ZENR	MTZJ6.8A	6.8V	
D17	VG438100	DIODE.ZENR	MTZJ6.2C	6.2V	
D18	iF004600	DIODE	1SS133		
D19	VN008700	DIODE	1SS270A		
D20	VN008700	DIODE	1SS270A		
D21	VH801600	DIODE	1SR139-100		
D22	VG440400	DIODE.ZENR	MTZJ13A	13V(R)	

* New Parts

MAIN P. C. B.

Schm Ref.	PART NO.	Description		
D24	VG442600	DIODE.ZENR	MTZJ24C 24V	
D25	Vi013600	LED	SLR-34VC3H3(G)	
D26	VG439600	DIODE.ZENR	MTZJ10C 10V	⚠
D27	VN008700	DIODE	1SS270A	
D28	VN011400	DIODE.BRG	D5SB20 5A 200V	⚠
D29	VG440300	DIODE.ZENR	MTZJ12C 12V	
D30	iF004600	DIODE	1SS133	
D31	iF004600	DIODE	1SS133	
D33	iF004600	DIODE	1SS133	
D34	iF004600	DIODE	1SS133	
D35	VG436200	DIODE.ZENR	MTZJ3.6A 3.6V	
IC1	XE322001	IC	NJM2068S-D	
IC2	XE322001	IC	NJM2068S-D	
IC3	XA053A00	IC	TC4052BP	
IC4	iG055100	IC	TC4053BP	
IC5	iG055100	IC	TC4053BP	
IC6	XB818A00	IC	LM7000N	
IC7	XB760001	IC	LA1266	
IC8	iG158100	IC	LA3401	
* IC9	XL865A00	IC	M50747XXX	
IC10	XE322001	IC	NJM2068S-D	
IC12	XF494A00	IC	LB1641	
IC13	XF663A00	IC	uPC1237HA	
JK2	LB301720	JACK.PHONE	M1669-A	
L1	GG000560	FLTR.CE	SFE10.7MS3GHY-A	
L2	VC362000	COIL	1mH	
L3	GG000560	FLTR.CE	SFE10.7MS3GHY-A	
L4	GE100470	COIL.IF.AM	450KHz	
L5	VC219000	FLTR.CE	SFZ450JL3	
L6	VC218600	COIL.DT.FM	10.7MHz	
L7	VC362000	COIL	1mH	
L8	GE200530	FLTR.LC	114KHz(G)	
L9	GE901850	COIL	39mH	
L10	GE901850	COIL	39mH	
L11	VC793700	COIL	1.5uH	
L12	VC793700	COIL	1.5uH	
L13	VC362000	COIL	1mH	
PJ1	VN308700	JACK.PIN	6P	
PJ2	VJ696200	JACK.PIN	4P	
PJ3	VJ696200	JACK.PIN	4P	
PJ4	VK437600	JACK.PIN	1P(BG)	
* PK1	VP654400	TUNER.PK	TFFG2U143A(UCRAB)	
* PK1	VP654500	TUNER.PK	TFFG4E139A(G)	
PK2	Vi027300	COIL.AM		
Q1	iC174020	TR	2SC1740S R,S	
Q2	iC174020	TR	2SC1740S R,S	
Q3	iC053540	TR	2SC535 A,B,C	
Q4	iA093320	TR	2SA933S Q,R	
Q5	VD678500	TR.DGT	DTA114ES	
Q6	iA093320	TR	2SA933S Q,R	
Q7	iC174020	TR	2SC1740S R,S	
Q8	VK432900	TR	2SD1915F S,T	
Q9	VK432900	TR	2SD1915F S,T	

* New Parts

Schm Ref.	PART NO.	Description		
Q10	iC174020	TR	2SC1740S R,S	
Q11	VC218900	TR	2SC3330 R,S,T	
Q12	VC218900	TR	2SC3330 R,S,T	
Q13	VK407600	TR	2SC4208A Q,R,S	
Q14	iA101521	TR	2SA1015 Y	
Q15	VE198700	TR	2SA1145 O,Y	
Q16	iC174020	TR	2SC1740S R,S	⚠
Q17	VC218900	TR	2SC3330 R,S,T	
Q18	VC218900	TR	2SC3330 R,S,T	
Q19	iC174020	TR	2SC1740S R,S	⚠
Q20	VE198700	TR	2SA1145 O,Y	
Q21	iA101521	TR	2SA1015 Y	
Q23A	iX613510	TR	2SC4488 R,S,T	⚠
Q23B	iX613500	TR	2SA1708 R,S,T	⚠
Q27A	iX613510	TR	2SC4488 R,S,T	⚠
Q27B	iX613500	TR	2SA1708 R,S,T	⚠
Q31	VG722000	TR.DGT	DTC144ES	
Q32	VG722000	TR.DGT	DTC144ES	
Q33	iC174020	TR	2SC1740S R,S	
Q34	iA097000	TR	2SA970 GR,BL	
Q35	iC224030	TR	2SC2240 GR,BL	
Q36	iC224030	TR	2SC2240 GR,BL	
Q37	iC257700	TR	2SC2577 O,P,Y(R)	
Q38	iC331200	TR	2SC3312 R,S,T(R)	
Q39	iC174020	TR	2SC1740S R,S(G)	
Q41	iC174020	TR	2SC1740S R,S	
Q42	VC614000	TR	2SB1274 Q,R,S	⚠
Q43	VD678500	TR.DGT	DTA114ES	
Q44	VD678500	TR.DGT	DTA114ES	
Q45	VK432900	TR	2SD1915F S,T	
Q46	VK432900	TR	2SD1915F S,T	
R38	HV454330	R.CAR.FP	33Ω 1/4W	
R43	HV454150	R.CAR.FP	15Ω 1/4W	
R63	HV454220	R.CAR.FP	22Ω 1/4W	
R64	HV454220	R.CAR.FP	22Ω 1/4W	
R76	HV453100	R.CAR.FP	1Ω 1/4W	
R125	HV454330	R.CAR.FP	33Ω 1/4W	
R134	HV454100	R.CAR.FP	10Ω 1/4W	
R140	HV454330	R.CAR.FP	33Ω 1/4W	
R151	HV454100	R.CAR.FP	10Ω 1/4W	⚠
R152	HV455330	R.CAR.FP	330Ω 1/4W(G)	
R152	HV455470	R.CAR.FP	470Ω 1/4W(UCRAB)	
R155	HV456560	R.CAR.FP	5.6KΩ 1/4W	
R157	HV456560	R.CAR.FP	5.6KΩ 1/4W	
R159	HV456560	R.CAR.FP	5.6KΩ 1/4W	
R160	HV456560	R.CAR.FP	5.6KΩ 1/4W	
R164	HV455330	R.CAR.FP	330Ω 1/4W(G)	
R164	HV455470	R.CAR.FP	470Ω 1/4W(UCRAB)	
R165	HV454100	R.CAR.FP	10Ω 1/4W	⚠
R169	HV454220	R.CAR.FP	22Ω 1/4W	⚠
R171	VK188600	R.FUS	470Ω 1/4W	⚠
R173	HV456270	R.CAR.FP	2.7KΩ 1/4W	
R174	VJ787600	R.MTL.PLAT	0.22Ω+0.22 5W	⚠

* New Parts

MAIN P. C. B.

Schm Ref.	PART NO.	Description		
R175	VK188900	R.FUS	820Ω 1/4W	⚠
R176	VK188900	R.FUS	820Ω 1/4W	⚠
R178	HV456270	R.CAR.FP	2.7KΩ 1/4W	
R179	VJ787600	R.MTL.PLAT	0.22Ω+0.22 5W	⚠
R180	VK188600	R.FUS	470Ω 1/4W	⚠
R189	HV457100	R.CAR.FP	10KΩ 1/4W	
R191	HV454100	R.CAR.FP	10Ω 1/4W	
R195	HV454100	R.CAR.FP	10Ω 1/4W	
R197	HV457100	R.CAR.FP	10KΩ 1/4W	
R201	VN010600	R.MTL.OXD	390Ω 2W	
R202	HV453220	R.CAR.FP	2.2Ω 1/4W(UCG)	
R203	VN010600	R.MTL.OXD	390Ω 2W	
R206	Vi661100	R.MTL.OXD	820Ω 2W	⚠
R210	HV453220	R.CAR.FP	2.2Ω 1/4W(G)	
R211	HV453220	R.CAR.FP	2.2Ω 1/4W(G)	
R213	HV456560	R.CAR.FP	5.6KΩ 1/4W	
R214	VK187800	R.FUS	100Ω 1/4W	
R216	HV456560	R.CAR.FP	5.6KΩ 1/4W	
R218	HV453100	R.CAR.FP	1Ω 1/4W	⚠
R219	HV453100	R.CAR.FP	1Ω 1/4W	⚠
R220	HV453220	R.CAR.FP	2.2Ω 1/4W(G)	
R221	HZ005110	R.CAR	2.2MΩ 1/2W(UC)	⚠
R223	HV454100	R.CAR.FP	10Ω 1/4W	
R224	HV454100	R.CAR.FP	10Ω 1/4W	
R226	HV454100	R.CAR.FP	10Ω 1/4W	⚠
R227	HV454100	R.CAR.FP	10Ω 1/4W	⚠
R236	HV453470	R.CAR.FP	4.7Ω 1/4W	
R237	HV453470	R.CAR.FP	4.7Ω 1/4W	
R238	HV453470	R.CAR.FP	4.7Ω 1/4W	
R239	HV453470	R.CAR.FP	4.7Ω 1/4W	
R247	HV453220	R.CAR.FP	2.2Ω 1/4W	
RY1	VD506000	RELAY	AC DG12D1-0M	⚠
RY2	KC001940	RELAY	DH24D2-OTM	⚠
SW1	VF541200	SW.SLIDE	SSSF11(R)	
SW4	VG392900	SW.TACT	SKHVAA	
SW5	VG392900	SW.TACT	SKHVAA	
SW6	VG392900	SW.TACT	SKHVAA	
SW7	VG392900	SW.TACT	SKHVAA	
SW10	VG392900	SW.TACT	SKHVAA	
SW11	VG392900	SW.TACT	SKHVAA	
SW12	VG392900	SW.TACT	SKHVAA	
SW13	VG392900	SW.TACT	SKHVAA	
SW14	VG392900	SW.TACT	SKHVAA	
SW15	VG392900	SW.TACT	SKHVAA	
SW16	VG392900	SW.TACT	SKHVAA	
SW17	VG392900	SW.TACT	SKHVAA	
SW18	VG392900	SW.TACT	SKHVAA	
SW19	VG392900	SW.TACT	SKHVAA	
SW20	VP065600	SW.PUSH	SPUL12410A	
SW22	VJ850200	SW.PUSH	PSE021A2KP 2	
SW24	VG392900	SW.TACT	SKHVAA	
SW25	VG392900	SW.TACT	SKHVAA	
SW26	VG392900	SW.TACT	SKHVAA	

* New Parts

Schm Ref.	PART NO.	Description		
SW27	VG392900	SW.TACT	SKHVAA	
T1	XC082A00	TRANS.PWR	(R)	⚠
T1	XC083A00	TRANS.PWR	(UC)	⚠
T1	XC084A00	TRANS.PWR	(ABG)	⚠
TE1	LA005800	TERM.ANT	YKD31-0215	
TE2	VK480600	OUTLET.AC	(UCR)	⚠
TE2	VK480700	OUTLET.AC	(G)	⚠
TE3	VN286300	TERM.SP	8P	⚠
TE4	LA002110	TERM.WRAP	2P i-TYPE P=5(R)	
TP1	VL448600	JUMPER.TST		
TP2	VL448600	JUMPER.TST		
U1	VF926500	L.DTCT	GP1U501X	
VR1	VJ694000	VR.TRIM	B47KΩ	
VR4	VJ694000	VR.TRIM	B47KΩ	
VR5	VN010900	VR	B10KΩ	
VR8	VN011000	VR	B10KΩ	
* VR11	VP822700	VR	MN5KΩ	
VR12	VJ692800	VR.TRIM	B470Ω	
VR13	VJ692800	VR.TRIM	B470Ω	
XL1	QU003800	RSNR.CRYS	7.2MHz	
XL2	GG000750	RSNR.CE	18.95MHz	
XL3	VE222400	RSNR.CE	8MHz	
*	VP537400	HEAT.SINK		
	VB966900	CN	IMSA-6024	
	BB071360	SCR.TERM	8.3x13(AB)	
	BB069510	GND.MTL	No.6951(UCG)	
*	VP750600	SCR.TERM	MEP1700	
	VN130700	SPACER		
	CB068880	PLST.RIVET	No.1027	
*	VP545500	HEAT.SINK		
	EK930010	SCR.BW.HD	3x8-8 FCRM3-BL	
*	VP542000	HEAT.SINK	ASSy	
Q25A	iX630860	TR	2SC4468 O,P,Y	⚠
Q25B	iX630850	TR	2SA1695 O,P,Y	⚠
Q29A	iX630860	TR	2SC4468 O,P,Y	⚠
Q29B	iX630850	TR	2SA1695 O,P,Y	⚠
Q40	VC938500	TR	2SC3852	⚠
*	VP323900	HEAT.SINK		
	VK195900	SHEET	19x24	
	VK173200	SCR.TR	3x15 SP FCM3	
	EK930010	SCR.BW.HD	3x8-8 FCRM3-BL	

* New Parts

EFFECT AMP P. C. B.

	Schm Ref.	PART NO.	Description		
*		VP536900	P.C.B.	EFFECT(UC)	
*		VP537000	P.C.B.	EFFECT(R)	
*		VP537100	P.C.B.	EFFECT(A)	
*		VP537200	P.C.B.	EFFECT(B)	
*		VP537300	P.C.B.	EFFECT(G)	
	CB501	VB858600	CN.BS.PIN	PH L-TYPE	7P SE
	CB603	VM923600	CN.BS.PIN	52045	13P TE
	CB606	VM923600	CN.BS.PIN	52045	13P TE
	CB801	VD004800	CN.BS.PIN	PH	5P TE
	CB803	VD004900	CN.BS.PIN	PH	6P TE
	CB901	VD004600	CN.BS.PIN	PH	3P TE(BG)
	CB951	LB201880	HOLDER.FUS	PC-FH1(R)	
	CB952	LB201880	HOLDER.FUS	PC-FH1(R)	
	C501	VG278900	C.CE.TUBLR	680pF	50V
	C502	VF467000	C.CE.TUBLR	1000pF	50V
	C503	VG290900	C.EL	10uF	50V
	C602	VH483900	C.CE.ARRAY	100pF	50V
*	C603	VP755200	C.CE.ARRAY	100pF	50V
	C607	VG289000	C.EL	220uF	25V
	C608	VG291200	C.EL	47uF	50V
	C609	VG289000	C.EL	220uF	25V
	C610	VD930900	C.CE.SMI	0.1uF	25V
	C611	VG291200	C.EL	47uF	50V
	C612	VD930900	C.CE.SMI	0.1uF	25V
	C613	VG291200	C.EL	47uF	50V
	C614	VD930900	C.CE.SMI	0.1uF	25V
	C615	UT653330	C.PP	3300pF	100V
	C616	UT653330	C.PP	3300pF	100V
	C617	VD930900	C.CE.SMI	0.1uF	25V
	C618	UJ667470	C.EL	47uF	50V
	C619	VE551900	C.CE	100pF	50V
	C620	VE551900	C.CE	100pF	50V
	C625	VE551900	C.CE	100pF	50V
	C628	VE551900	C.CE	100pF	50V
	C631	VG291200	C.EL	47uF	50V
	C632	VG291200	C.EL	47uF	50V
	C633	VE551900	C.CE	100pF	50V
	C634	VJ839200	C.EL	2.2uF	50V
	C635	VJ839200	C.EL	2.2uF	50V
	C636	VE551900	C.CE	100pF	50V
	C637	FG212330	C.CE	330pF	50V
	C638	VG291200	C.EL	47uF	50V
	C639	VG291200	C.EL	47uF	50V
	C640	VG291200	C.EL	47uF	50V
	C641	VG291200	C.EL	47uF	50V
	C642	FG212330	C.CE	330pF	50V
	C643	FG212330	C.CE	330pF	50V
	C644	VG291200	C.EL	47uF	50V
	C645	VG291200	C.EL	47uF	50V
	C646	VG291000	C.EL	22uF	50V
	C647	VE551900	C.CE	100pF	50V
	C648	VE551900	C.CE	100pF	50V
	C649	VG291000	C.EL	22uF	50V

* New Parts

Schm Ref.	PART NO.	Description		
C650	VG291000	C.EL	22uF	50V
C651	VE551900	C.CE	100pF	50V
C652	VE551900	C.CE	100pF	50V
C653	VG291000	C.EL	22uF	50V
C654	FG252270	C.CE	270pF	50V
C655	UA655180	C.MYLAR	0.18uF	50V
C656	UA653240	C.MYLAR	2400pF	50V
C657	UG412180	C.CE	180pF	50V
C658	UA653240	C.MYLAR	2400pF	50V
C659	UG412180	C.CE	180pF	50V
C660	UA653180	C.MYLAR	1800pF	50V
C661	UA653270	C.MYLAR	2700pF	50V
C662	UA653180	C.MYLAR	1800pF	50V
C663	UA653270	C.MYLAR	2700pF	50V
C664	VG291200	C.EL	47uF	50V
C665	VG291200	C.EL	47uF	50V
C666	Fi553330	C.CE	3300pF	50V
C667	VG291200	C.EL	47uF	50V
C668	VG291200	C.EL	47uF	50V
C669	Fi553330	C.CE	3300pF	50V
C670	Fi553100	C.CE	1000pF	50V
C671	VG290900	C.EL	10uF	50V
C672	VG290900	C.EL	10uF	50V
C673	Fi553100	C.CE	1000pF	50V
C674	VG291000	C.EL	22uF	50V
C675	VG291000	C.EL	22uF	50V
C678	UG412150	C.CE	150pF	50V
C679	VG290900	C.EL	10uF	50V
C680	VG290900	C.EL	10uF	50V
C681	UG412150	C.CE	150pF	50V
C684	UM417100	C.EL	10uF	50V
C685	UM417100	C.EL	10uF	50V
C690	Fi553100	C.CE	1000pF	50V
C691	VG290900	C.EL	10uF	50V
C692	VG290900	C.EL	10uF	50V
C693	Fi553100	C.CE	1000pF	50V
C694	VG722100	C.EL	1uF	50V
C697	VG278100	C.CE.TUBLR	120pF	50V
C698	VG278100	C.CE.TUBLR	120pF	50V
C699	VG278100	C.CE.TUBLR	120pF	50V
C702	VG278100	C.CE.TUBLR	120pF	50V
C704	VG278100	C.CE.TUBLR	120pF	50V
C705	VG278100	C.CE.TUBLR	120pF	50V
C706	VG278100	C.CE.TUBLR	120pF	50V
C707	VG278100	C.CE.TUBLR	120pF	50V
C708	UM417100	C.EL	10uF	50V
C709	UG444220	C.CE	0.022uF	50V
C801	UM417100	C.EL	10uF	50V
C802	VE551900	C.CE	100pF	50V
C803	VE551900	C.CE	100pF	50V
C804	UM417100	C.EL	10uF	50V
C805	UJ668100	C.EL	100uF	50V
C806	FG212220	C.CE	220pF	50V

* New Parts

EFFECT AMP P. C. B.

Schm Ref.	PART NO.	Description			
C807	UM417100	C.EL	10uF	50V	
C808	VE551900	C.CE	100pF	50V	
C809	Ui367220	C.EL	22uF	50V	
C810	VJ836900	C.EL	10uF	16V	
C811	VJ837200	C.EL	47uF	16V	
C812	VJ836900	C.EL	10uF	16V	
C813	UJ638470	C.EL	470uF	16V	
C814	VF637900	C.EL	1000uF	10V	
C815	FG251220	C.CE	22pF	50V	
C816	VF637900	C.EL	1000uF	10V	
C817	UM417100	C.EL	10uF	50V	
C818	VE551900	C.CE	100pF	50V	
C819	VE551900	C.CE	100pF	50V	
C820	UM417100	C.EL	10uF	50V	
C821	Fi553330	C.CE	3300pF	50V	
C822	VF760000	C.EL	100uF	10V	
C823	VD930900	C.CE.SMI	0.1uF	25V	
C824	FG212220	C.CE	220pF	50V	
C825	VE551900	C.CE	100pF	50V	
C826	FG251220	C.CE	22pF	50V	
C827	VE551900	C.CE	100pF	50V	
C828	UA654470	C.MYLAR	0.047uF	50V	
C829	UJ667470	C.EL	47uF	50V	
C830	FG212220	C.CE	220pF	50V	
C831	VE551900	C.CE	100pF	50V	
C832	FG251220	C.CE	22pF	50V	
C833	VE551900	C.CE	100pF	50V	
C834	UA654470	C.MYLAR	0.047uF	50V	
C835	UJ667470	C.EL	47uF	50V	
C836	VN715700	C.CE	68pF	500V	
C838	UA655100	C.MYLAR	0.1uF	50V	
C839	Fi551100	C.CE	10pF	50V	
C840	Ui367220	C.EL	22uF	50V	
C841	VN715700	C.CE	68pF	500V	
C842	VF964800	C.EL	100uF	16V	
C843	VF964800	C.EL	100uF	16V	
C844	VF964800	C.EL	100uF	16V	
C845	UM417100	C.EL	10uF	50V	
C846	UA654470	C.MYLAR	0.047uF	50V	
C847	VJ839100	C.EL	1uF	50V	
C848	VJ839100	C.EL	1uF	50V	
C849	Vi862100	C.POL.MTL	0.047uF	100V	⚠
C850	VL544800	C.EL	3300uF	35V	
C851	Vi862100	C.POL.MTL	0.047uF	100V	⚠
C852	VL544800	C.EL	3300uF	35V	
C853	UG444100	C.CE	0.01uF	50V(G)	
C854	UG413220	C.CE	2200pF	50V(G)	
C855	UG444100	C.CE	0.01uF	50V(G)	
C856	UG444100	C.CE	0.01uF	50V(G)	
C857	UG413220	C.CE	2200pF	50V(G)	
C858	UG444100	C.CE	0.01uF	50V(G)	
C859	UG444100	C.CE	0.01uF	50V(G)	
C860	UG413220	C.CE	2200pF	50V(G)	

* New Parts

Schm Ref.	PART NO.	Description			
C861	UG444100	C.CE	0.01uF	50V(G)	
C862	VF964800	C.EL	100uF	16V	
C863	UG444100	C.CE	0.01uF	50V	
C901	VJ836900	C.EL	10uF	16V(BG)	
C902	VJ837200	C.EL	47uF	16V(BG)	
C903	VJ836900	C.EL	10uF	16V(BG)	
C904	UJ638470	C.EL	470uF	16V(BG)	
C905	VF637900	C.EL	1000uF	10V(BG)	
C906	VF637900	C.EL	1000uF	10V(BG)	
C907	VJ836900	C.EL	10uF	16V(BG)	
C908	VJ837200	C.EL	47uF	16V(BG)	
C909	VJ836900	C.EL	10uF	16V(BG)	
C911	UM397330	C.EL	33uF	16V(BG)	
C912	UM397330	C.EL	33uF	16V(BG)	
C913	FG251220	C.CE	22pF	50V(BG)	
C914	FG251220	C.CE	22pF	50V(BG)	
C915	FG212330	C.CE	330pF	50V	
C916	UM417100	C.EL	10uF	50V	
C917	UM417100	C.EL	10uF	50V	
C918	VF760000	C.EL	100uF	10V	
C919	VD930900	C.CE.SMI	0.1uF	25V	
C920	UM417100	C.EL	10uF	50V	
C921	UA655100	C.MYLAR	0.1uF	50V	
C922	VD930900	C.CE.SMI	0.1uF	25V(BG)	
D601	iF004600	DIODE	1SS133		
D602	iF004600	DIODE	1SS133		
D603	iF004600	DIODE	1SS133		
D604	iF004600	DIODE	1SS133		
D605	iF004600	DIODE	1SS133		
D606	iF004600	DIODE	1SS133		
D607	iF004600	DIODE	1SS133		
D608	iF004600	DIODE	1SS133		
D609	iF004600	DIODE	1SS133		
D801	VN008700	DIODE	1SS270A		
D802	VN011300	DIODE.BRG	D3SBA20	4A 200V	⚠
D803	VG442600	DIODE.ZENR	MTZJ24C	24V	
IC501	XB417A00	IC	LC7582		
IC601	Xi020A00	IC	HM65256BLFP-10T		
IC602	XA507A00	IC	AN78N05		
IC604	Xi022A00	IC	YSS203(HLDSP)		
IC605	XB247301	IC	uPC4570HA		
IC606	XC520A01	IC	uPC4570C		
IC607	XC520A01	IC	uPC4570C		
IC608	XM085A00	IC	M5238A		
IC609	XM085A00	IC	M5238A		
IC610	XB247301	IC	uPC4570HA		
IC611	XC520A01	IC	uPC4570C		
IC612	XC520A01	IC	uPC4570C		
IC613	XB247301	IC	uPC4570HA		
IC614	XG758A00	IC	LC7823N		
IC615	XC520A01	IC	uPC4570C		
IC616	XC520A01	IC	uPC4570C		
IC618	XB247301	IC	uPC4570HA		

* New Parts

EFFECT AMP P. C. B.

Schm Ref.	PART NO.	Description		
IC801	XH436A00	IC	LA7956	
IC802	XE322001	IC	NJM2068S-D	
IC804	iG102700	IC	uPC1188H	⚠
IC805	iG102700	IC	uPC1188H	⚠
IC806	XD340A00	IC	AN78M12F	⚠
IC807	XD342A00	IC	AN79M12F	⚠
IC901	XH436A00	IC	LA7956(BG)	
IC902	XH436A00	IC	LA7956(BG)	
JK901	VP113600	CN.DIN	2P YKF51-5510(BG)	
JK902	VP113600	CN.DIN	2P YKF51-5510(BG)	
L601	Vi546100	COIL	220uH	
L602	VK175000	FLTR.LC	18KHz TFB-2D	
L603	VK175000	FLTR.LC	18KHz TFB-2D	
L604	VC362000	COIL	1mH	
L801	VC793700	COIL	1.5uH	
L802	VC793700	COIL	1.5uH	
L803	VC793700	COIL	1.5uH	
PJ801	VM750500	JACK.PIN	4P	
Q601	VK432900	TR	2SD1915F S,T	
Q602	VK432900	TR	2SD1915F S,T	
Q603	VK432900	TR	2SD1915F S,T	
Q801	VC218900	TR	2SC3330 R,S,T	
Q802	iA101521	TR	2SA1015 Y	
Q803	iC1815C0	TR	2SC1815 Y	
Q804	VC218900	TR	2SC3330 R,S,T	
Q805A	iX613510	TR	2SC4488 R,S,T	⚠
Q805B	iX613500	TR	2SA1708 R,S,T	⚠
Q806	iA097000	TR	2SA970 GR,BL	
Q807	iC174020	TR	2SC1740S R,S	⚠
Q808	iA111510	TR	2SA1115 E,F	
Q809	iC174020	TR	2SC1740S R,S	
Q810	iA097000	TR	2SA970 GR,BL	
Q811A	iX615760	TR	2SC4467 O,P,Y	⚠
Q811B	iX615750	TR	2SA1694 O,P,Y	⚠
Q812	iC224030	TR	2SC2240 GR,BL	
Q814	VK432900	TR	2SD1915F S,T	
Q815	iC331200	TR	2SC3312 R,S,T	
Q901	iA101521	TR	2SA1015 Y(BG)	
Q902	iC1815C0	TR	2SC1815 Y(BG)	
Q903	iA101521	TR	2SA1015 Y(BG)	
Q904	iC1815C0	TR	2SC1815 Y(BG)	
R603	HL314330	R.MTL.OXD	33Ω 1W	
R809	HV456150	R.CAR.FP	1.5KΩ 1/4W	
R824	HV456100	R.CAR.FP	1KΩ 1/4W	
R827	HV454470	R.CAR.FP	47Ω 1/4W	
R830	HV454100	R.CAR.FP	10Ω 1/4W	
R836	HV454100	R.CAR.FP	10Ω 1/4W	
R839	VK188600	R.FUS	470Ω 1/4W	⚠
R840	VK186600	R.FUS	10Ω 1/4W	⚠
R841	HV453470	R.CAR.FP	4.7Ω 1/4W	
R842	VK189400	R.FUS	2.7KΩ 1/4W	
R843	HV455470	R.CAR.FP	470Ω 1/4W	
R845	VK189100	R.FUS	1.2KΩ 1/4W	

* New Parts

Schm Ref.	PART NO.	Description			
R846	HV457220	R.CAR.FP	22KΩ 1/4W		
R847	HV453470	R.CAR.FP	4.7Ω 1/4W		
R852	HV453470	R.CAR.FP	4.7Ω 1/4W		
R854	HV453470	R.CAR.FP	4.7Ω 1/4W		
R855	HV453470	R.CAR.FP	4.7Ω 1/4W		
R856	HV457100	R.CAR.FP	10KΩ 1/4W		
R858	HV457100	R.CAR.FP	10KΩ 1/4W		
R860	VJ787600	R.MTL.PLAT	0.22Ω+0.22 5W		⚠
R862	HV454100	R.CAR.FP	10Ω 1/4W		⚠
R864	HV453470	R.CAR.FP	4.7Ω 1/4W		⚠
R865	HV453470	R.CAR.FP	4.7Ω 1/4W		⚠
R866	HV453220	R.CAR.FP	2.2Ω 1/4W(G)		
R867	HV453220	R.CAR.FP	2.2Ω 1/4W(G)		
R868	HV453220	R.CAR.FP	2.2Ω 1/4W(G)		
R874	HL325820	R.MTL.OXD	820Ω 2W		
R875	HV453220	R.CAR.FP	2.2Ω 1/4W		⚠
R876	HV453220	R.CAR.FP	2.2Ω 1/4W		⚠
R879	HV453220	R.CAR.FP	2.2Ω 1/4W		
R919	HV454470	R.CAR.FP	47Ω 1/4W(G)		
* RY801	VP378900	RELAY	DC DT24D2-OSM		⚠
SW951	VA961800	VOLT.SELCT	ESE-37247-F(R)		⚠
* TE801	VN937900	TERM.SP	6P		⚠
TE802	LA002000	TERM.WRAP	2P i-TYPE P=7.5		
TE803	LA002000	TERM.WRAP	2P i-TYPE P=7.5		
* V501	VP113900	LCD	LCD8244B1JP		
* VR601	VP482200	VR	A10KΩ		
* VR602	VP482300	VR	A10KΩ		
* VR603	VP482300	VR	A10KΩ		
* VR604	VP482400	VR.MTR	A100KΩ		
* W605	VP702700	CN.FLAT	13P 130mm		
XL601	VK175200	RSNR.CE	11.28MHz		
	VB966900	CN	IMSA-6024		
	BB071360	SCR.TERM	8.3x13		
	VK509500	HEAT.SINK	OSH-1025 CDI-P11X		
	ED330066	SCR.BND.HD	3x6 FCRM3-BL		
	VN160300	LAMP	115mA 14.5V		
	VG433100	RFLCT	LCD		
*	VP323700	SHEET			
	VF444500	CAP.LAMP	AG-4015		
	VG650400	RING			
	CB605620	PLST.RIVET	No.1781		
*	VP324200	FRAME			

* New Parts

RX-V470

■ EXPLODED VIEW

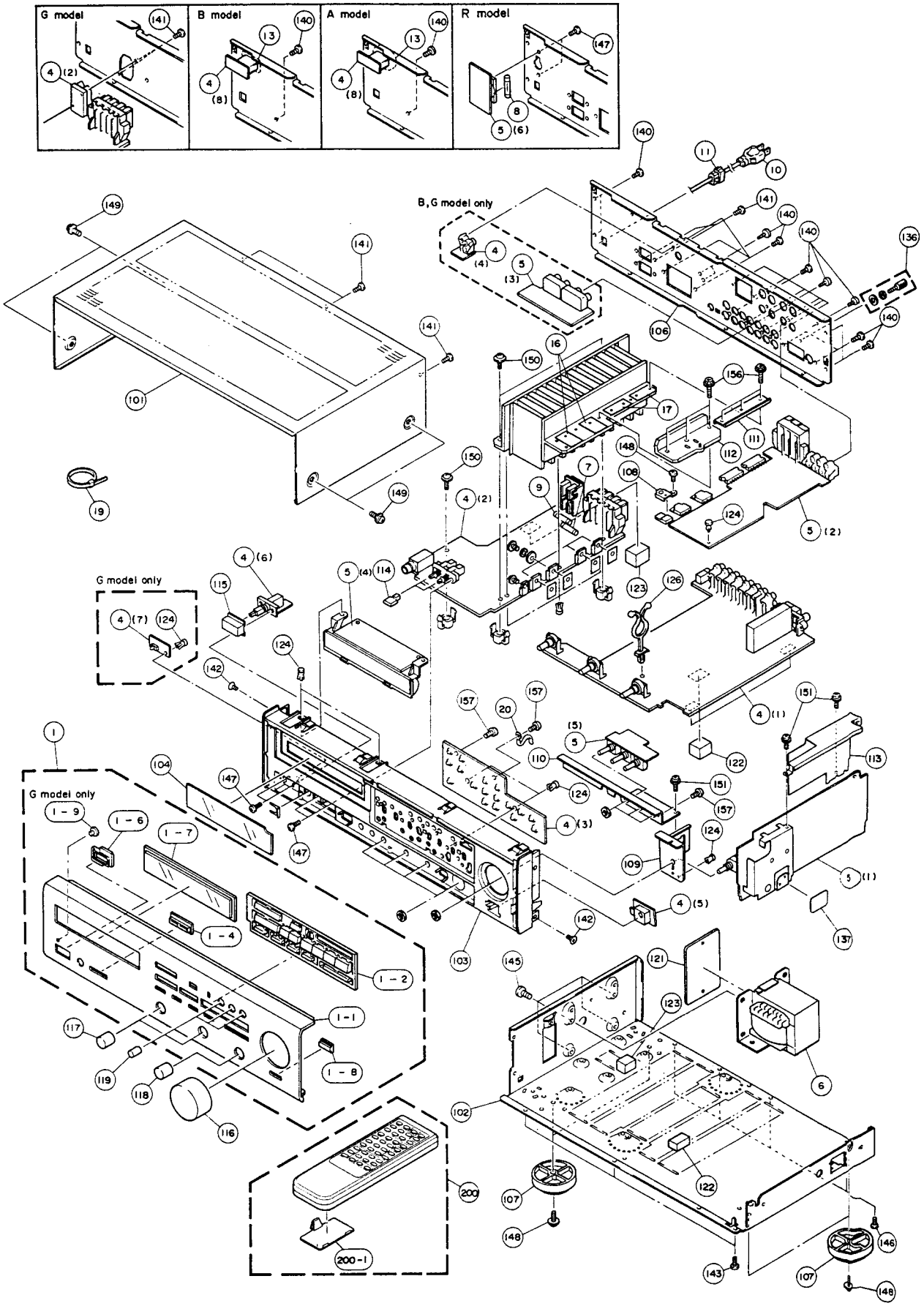

■ MECHANICAL PARTS Note) Ø : Diameter

	Ref. No.	PART NO.	Description		Remarks	Markets	
*	1	VP536200	FRONT PANEL UNIT			UCRAB	
*	1	VP536300	FRONT PANEL UNIT			G	
*	1-1	VP118400	FRONT PANEL			UCRAB	
*	1-1	VP118600	FRONT PANEL			G	
	1-2	VP323500	SUB PANEL				
	1-4	VG430600	ESCUTCHEON	2x3x14			
	1-6	VE707800	BUTTON GUIDE	10x25			
	1-7	VJ832800	WINDOW PANEL				
	1-8	VH897500	LENS				
	1-9	VH897600	LENS	2.2S		G	
*	4	VP536400	P.C.B. ASSy, MAIN			UC	
*	4	VP536500	P.C.B. ASSy, MAIN			R	
*	4	VP536600	P.C.B. ASSy, MAIN			A	
*	4	VP536700	P.C.B. ASSy, MAIN			B	
*	4	VP536800	P.C.B. ASSy, MAIN			G	
*	5	VP536900	P.C.B. ASSy, EFFECT AMP			UC	
*	5	VP537000	P.C.B. ASSy, EFFECT AMP			R	
*	5	VP537100	P.C.B. ASSy, EFFECT AMP			A	
*	5	VP537200	P.C.B. ASSy, EFFECT AMP			B	
*	5	VP537300	P.C.B. ASSy, EFFECT AMP			G	
*	6	XL839A00	POWER TRANSFORMER			U	⚠
*	6	XL840A00	POWER TRANSFORMER			C	⚠
*	6	XL841A00	POWER TRANSFORMER			R	⚠
*	6	XL842A00	POWER TRANSFORMER			AB	⚠
*	6	XL843A00	POWER TRANSFORMER			G	⚠
	7	KB000740	FUSE	T1.6A 250V		ABG	⚠
	7	KB000760	FUSE	T3.15A 250V		R	⚠
	7	KB003200	FUSE	5A 125V		UC	⚠
	8	KB000740	FUSE	T1.6A 250V		R	⚠
	9	KB002980	FUSE	T2.5A 250V		G	⚠
	10	VL012900	POWER CORD ASSy			UC	⚠
	10	VL238100	POWER CORD ASSy			R	⚠
	10	VL238400	POWER CORD ASSy			A	⚠
	10	VL238900	POWER CORD ASSy			G	⚠
	10	VN804500	POWER CORD ASSy			B	⚠
	11	VN158600	CORD STOPPER	No.2104			
	13	VJ775000	AC OUTLET	2P		B	⚠
	13	VP418700	AC OUTLET	2P		A	⚠
	16	VK195900	SHEET	19x24			
	17	Vi071200	SHEET, RADIATOR	34x15			
	19	CB069250	BINDING TIE	BK-1			
	20	CB040540	BINDING TIE	S-72B		ABG	
	101	VM932800	TOP COVER				
	102	VG426500	CHASSIS				
	103	VJ423200	SUB CHASSIS				
*	104	VP323400	SHEET, DISPLAY				
*	106	VP321800	REAR PANEL			U	
*	106	VP321900	REAR PANEL			C	
*	106	VP322100	REAR PANEL			R	
*	106	VP322200	REAR PANEL			A	
*	106	VP322300	REAR PANEL			B	
*	106	VP322400	REAR PANEL			G	
	107	VK016500	LEG	Ø60/H21			

* New Parts

	Ref. No.	PART NO.	Description			Remarks	Markets
*	108	VP826100	SUPPORT, TR				
*	109	VP323200	FRAME, VOL				
*	110	VP323300	FRAME, EFFECT				
*	111	VP323800	FRAME, IC				
*	112	VP825900	HEAT SINK, TR				
*	113	VP738500	SHIELD PLATE				
	114	VM736600	BUTTON	3x14			
	115	VH841900	BUTTON	POWER			
	116	VK054300	KNOB	Ø45			
*	117	VP580700	KNOB	Ø14			
	118	VP511700	KNOB	Ø14			
*	119	VP323000	KNOB	Ø9			
	121	VJ646800	FRAME	RADIATOR			
	122	VF274900	DAMPER	15x15x8			
	123	VH088000	SPACER				
	124	CB605620	PLASTIC RIVET	No.1781			
	125	CB602970	PLASTIC RIVET	No.920			
	126	VN012600	CABLE CLIP	#1F55			
	136	AA627310	GROUND TERMINAL				
*	137	VQ114600	SHIELD PLATE				
	140	EN301010	BIND HEAD BONDING TAP. SCREW	3x8	FCRM3-BL		
	141	Ei330086	BIND HEAD B-TITE SCREW	3x8	FCRM3-BL	PACK	
	142	EO330066	FLAT HEAD B-TITE SCREW	3x6	FCRM3-BL	PACK	
	143	EX601360	BIND HEAD P-TITE SCREW	3x10	FCRM3-BL		
	145	Ei340806	BIND HEAD B-TITE SCREW	4x8	FCRM3-BL	PACK	
	146	EP600130	BIND HEAD B-TITE SCREW	3x6	ZMC2-Y		
	147	ED330066	BIND HEAD SCREW	3x6	FCRM3-BL	PACK	
	148	EK930010	BW HEAD TAPPING SCREW	3x8-8	FCRM3-BL		
	149	EK365090	BW HEAD SCREW	4x8	ZMC2-BL		
	150	EL300480	BW HEAD B-TITE SCREW	3x15-8	FCRM3-BL		
	151	EX602760	BW HEAD S-TITE SCREW	3x6-8	FCRM3-BL		
	156	VK865300	HEX. HEAD TAP. SCREW WITH WS	3x18	FCRM3-BL		
	157	VF617600	PAN HEAD P-TITE SCREW	2.6x8	FCRM3-BL		
			ACCESSORIES				
*	200	VP497300	REMOTE CONTROL TRANSMITTER				
	200-1	CX673000	LID			K-PM2-385-1	
		VG850700	ANTENNA, FM		1.4m		
		VE366200	LOOP ANTENNA	1P	3.0m		
		VE364900	ANTENNA ADAPTER	PAL	75-300Ω		
			BATTERY, MANGANESE	SUM-3,AA,R06			

* New Parts

RX-V470

REMOTE CONTROL TRANSMITTER

■ SCHEMATIC DIAGRAM

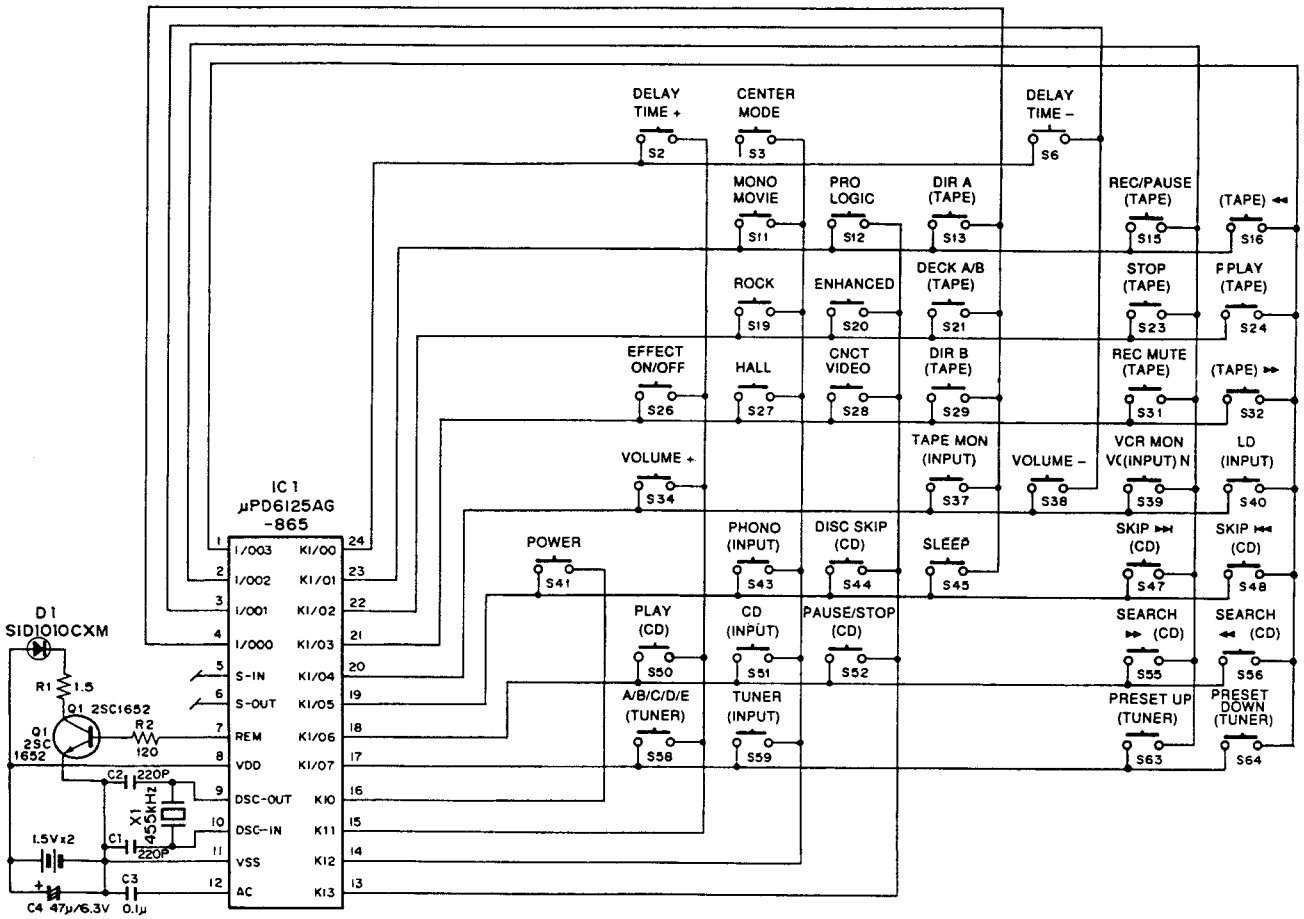

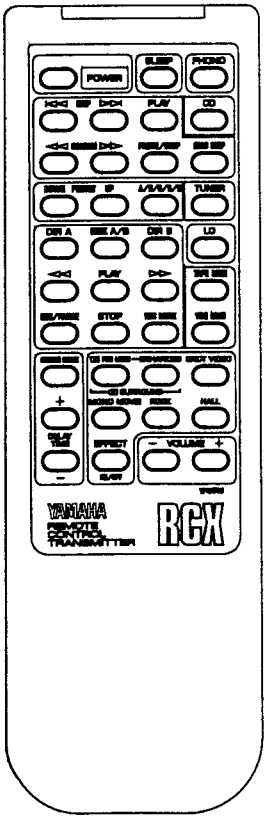

KEY No.	CUSTOM (HEX)	DATA (HEX)	FUNCTION
2	7A	52	DELAY TIME +
3	7A	84	CENTER MODE
6	7A	53	DELAY TIME –
11	7A	8B	MONO MOVIE
12	7A	88	PRO LOGIC
13	7A	07	(TAPE) DIR A
15	7A	04	(TAPE) REC/PAUSE
16	7A	01	(TAPE) ◀◀
19	7A	8C	ROCK
20	7A	89	ENHANCED
21	7A	06	(TAPE) DECK A/B
23	7A	03	(TAPE) STOP
24	7A	00	(TAPE) PLAY
26	7A	56	EFFECT ON/OFF
27	7A	8D	HALL
28	7A	8A	CNCT VIDEO
29	7A	40	(TAPE) DIR B
31	7A	05	(TAPE) REC MUTE
32	7A	02	(TAPE) ▶▶
34	7A	1A	VOLUME +

KEY No.	CUSTOM (HEX)	DATA (HEX)	FUNCTION
37	7A	18	(INPUT) TAPE MON
38	7A	1B	VOLUME –
39	7A	0F	(INPUT) VCR MON
40	7A	17	(INPUT) LD
41	7A	1F	POWER
43	7A	14	(INPUT) PHONO
44	7A	4F	(CD) DISC SKIP
45	7A	57	SLEEP
47	7A	0A	(CD) SKIP ▶▶|
48	7A	0B	(CD) SKIP |◀◀
50	7A	08	(CD) PLAY
51	7A	15	(INPUT) CD
52	7A	09	(CD) PAUSE/STOP
55	7A	0C	(CD) SEARCH ▶▶
56	7A	0D	(CD) SEARCH ◀◀
58	7A	12	(TUNER) A/B/C/D/E
59	7A	16	(INPUT) TUNER
63	7A	10	(TUNER) PRESET UP
64	7A	11	(TUNER) PRESET DOWN

Parts List for Carbon Resistors

Value	1/4W Type Part No.	1/6W Type Part No.	Value	1/4W Type Part No.	1/6W Type Part No.
1.0 Ω	HJ35 3100	HF85 3100	10 kΩ	HF45 7100	HF45 7100
1.8 Ω	HJ35 3180	*	11 kΩ	HF45 7110	HF45 7110
2.2 Ω	HJ35 3220	HF85 3220	12 kΩ	HJ35 7120	HF85 7120
3.3 Ω	HJ35 3330	HF85 3330	13 kΩ	HF45 7130	HF45 7130
4.7 Ω	HJ35 3470	HF85 3470	15 kΩ	HF45 7150	HF45 7150
5.6 Ω	HJ35 3560	HF85 3560	18 kΩ	HF45 7180	HF45 7180
10 Ω	HF45 4100	HF45 4100	22 kΩ	HF45 7220	HF45 7220
15 Ω	HJ35 4150	HF85 4150	24 kΩ	HF45 7240	HF45 7240
22 Ω	HF45 4220	HF45 4220	27 kΩ	HJ35 7270	HF85 7270
27 Ω	HJ35 4270	HF85 4270	30 kΩ	HF45 7300	HF45 7300
33 Ω	HF45 4330	HF45 4330	33 kΩ	HF45 7330	HF45 7330
39 Ω	HJ35 4470	HF85 4390	36 kΩ	HF45 7360	HF45 7360
47 Ω	HF45 4470	HF45 4470	39 kΩ	HF45 7390	HF45 7390
56 Ω	HF45 4560	HF45 4560	47 kΩ	HF45 7470	HF45 7470
68 Ω	HF45 4680	HF45 4680	51 kΩ	HF45 7510	HF45 7510
75 Ω	HF45 4750	HF45 4750	56 kΩ	HF45 7560	HF45 7560
82 Ω	HF45 4820	HF45 4820	62 kΩ	HF45 7620	HF45 7620
91 Ω	HF45 4910	HF45 4910	68 kΩ	HF45 7680	HF45 7680
100 Ω	HF45 5100	HF45 5100	82 kΩ	HF45 7820	HF45 7820
110 Ω	HJ35 5110	HF85 5110	91 kΩ	HF45 7910	HF45 7910
120 Ω	HF45 5120	HF45 5120	100 kΩ	HF45 8100	HF45 8100
150 Ω	HF45 5150	HF45 5150	110 kΩ	HF45 8110	HF45 8110
160 Ω	HJ35 5160	*	120 kΩ	HF45 8120	HF45 8120
180 Ω	HF45 5180	HF45 5180	150 kΩ	HF45 8150	HF45 8150
200 Ω	HF45 5200	HF45 5200	180 kΩ	HF45 8180	HF45 8180
220 Ω	HF45 5220	HF45 5220	220 kΩ	HJ35 8220	HF85 8220
270 Ω	HF45 5270	HF45 5270	270 kΩ	HF45 8270	HF45 8270
330 Ω	HF45 5330	HF45 5330	300 kΩ	HF45 8300	HF45 8300
390 Ω	HF45 5390	HF45 5390	330 kΩ	HF45 8330	HF45 8330
430 Ω	HF45 5430	HF45 5430	390 kΩ	HJ35 8390	HF85 8390
470 Ω	HF45 5470	HF45 5470	470 kΩ	HF45 8470	HF45 8470
510 Ω	HF45 5510	HF45 5510	560 kΩ	HJ35 8560	HF85 8560
560 Ω	HF45 5560	HF45 5560	680 kΩ	HJ35 8680	HF85 8680
680 Ω	HF45 5680	HF45 5680	820 kΩ	HJ35 8820	HF85 8820
820 Ω	HF45 5820	HF45 5820	1.0 MΩ	HF45 9100	HF45 9100
910 Ω	HF45 5910	HF45 5910	1.2 MΩ	HJ35 9120	*
1.0 kΩ	HF45 6100	HF45 6100	1.5 MΩ	HJ35 9150	HF85 9150
1.2 kΩ	HF45 6120	HF45 6120	1.8 MΩ	HJ35 9180	HF85 9180
1.5 kΩ	HF45 6150	HF45 6150	2.2 MΩ	HJ35 9220	HF85 9220
1.8 kΩ	HF45 6180	HF45 6180	3.3 MΩ	HJ35 9330	HF85 9330
2.0 kΩ	HJ35 6200	HF85 6200	3.9 MΩ	HJ35 9390	*
2.2 kΩ	HF45 6220	HF45 6220	4.7 MΩ	HJ35 9470	HF85 9470
2.4 kΩ	HJ35 6240	HF85 6240			
2.7 kΩ	HF45 6270	HF45 6270			
3.0 kΩ	HF45 6300	HF45 6300			
3.3 kΩ	HF45 6330	HF45 6330			
3.6 kΩ	HJ35 6360	HF85 6360			
3.9 kΩ	HF45 6390	HF45 6390			
4.7 kΩ	HF45 6470	HF45 6470			
5.1 kΩ	HF45 6510	HF45 6510			
5.6 kΩ	HF45 6560	HF45 6560			
6.8 kΩ	HF45 6680	HF45 6680			
8.2 kΩ	HF45 6820	HF45 6820			
9.1 kΩ	HF45 6910	HF45 6910			

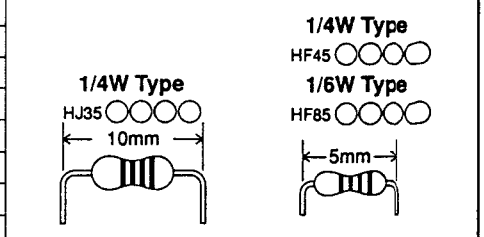

1992

RX-V470

YAMAHA