TFT-LCD TV

Chassis GLY26KE
GLY32KE
GLY37KE
GLY40KE

Model LE26R73BD/LE26R74BD
LE32R73BD/LE32R74BD
LE37R74BD
LE40R73BD/LE40R74BD

SERVICE Manual

ELECTRONIC SERVICE TIRGOVISTE

TFT-LCD TV

Fashion Feature

- Luxurious Slim Design
- Supreme Picture Quality
- Supreme Sound Quality
- Supreme Convenience Quality
- Convenience for Users
- DVB-T, iDTV
- MHP (Only for R62F)

1 Precautions

Follow these safety, servicing and ESD precautions to prevent damage and to protect against potential hazards such as electrical shock.

1-1 Safety Precautions

1-1-1 Warnings

1. For continued safety, do not attempt to modify the circuit board.
2. Disconnect the AC power and DC Power Jack before servicing.

1-1-2 Servicing the LCD Monitor

1. When servicing the LCD Monitor Disconnect the AC line cord from the AC outlet.
2. It is essential that service technicians have an accurate voltage meter available at all times. Check the calibration of this meter periodically.

1-1-3 Fire and Shock Hazard

Before returning the monitor to the user, perform the following safety checks:

1. Inspect each lead dress to make certain that the leads are not pinched or that hardware is not lodged between the chassis and other metal parts in the monitor.
2. Inspect all protective devices such as nonmetallic control knobs, insulating materials, cabinet backs, adjustment and compartment covers or shields, isolation resistor-capacitor networks, mechanical insulators, etc.
3. Leakage Current Hot Check (Figure 1-1):
   WARNING: Do not use an isolation transformer during this test.
   Use a leakage current tester or a metering system that complies with American National Standards Institute (*ANSI C101.1, Leakage Current for Appliances*), and Underwriters Laboratories (*UL Publication UL1410, 59.7*).

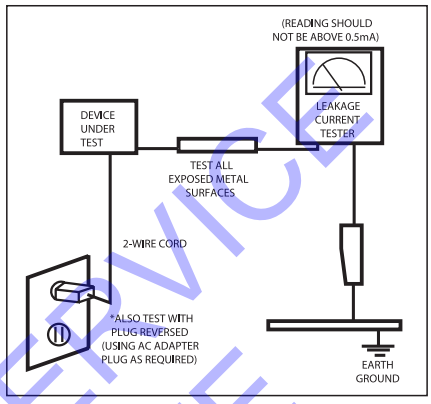

Figure 1-1. Leakage Current Test Circuit

1-1-4 Product Safety Notices

Some electrical and mechanical parts have special safety-related characteristics which are often not evident from visual inspection. The protection they give may not be obtained by replacing them with components rated for higher voltage, wattage, etc. Parts that have special safety characteristics are identified by ⚠ on schematics and parts lists. A substitute replacement that does not have the same safety characteristics as the recommended replacement part might create shock, fire and/or other hazards. Product safety is under review continuously and new instructions are issued whenever appropriate.

ELECTRONIC SERVICE TIRGOVISTE

1-2 Servicing Precautions

WARNING: **An electrolytic capacitor installed with the wrong polarity might explode.**

Caution: **Before servicing units covered by this service manual, read and follow the Safety Precautions section of this manual.**

Note: If unforeseen circumstances create conflict between the following servicing precautions and any of the safety precautions, always follow the safety precautions.

1-2-1 General Servicing Precautions

1. Always unplug the unit s AC power cord from the AC power source and disconnect the DC Power Jack before attempting to:
   (a) remove or reinstall any component or assembly, (b) disconnect PCB plugs or connectors, (c) connect a test component in parallel with an electrolytic capacitor.
2. Some components are raised above the printed circuit board for safety. An insulation tube or tape is sometimes used. The internal wiring is sometimes clamped to prevent contact with thermally hot components. Reinstall all such elements to their original position.
3. After servicing, always check that the screws, components and wiring have been correctly reinstalled. Make sure that the area around the serviced part has not been damaged.
4. Check the insulation between the blades of the AC plug and accessible conductive parts (examples: metal panels, input terminals and earphone jacks).
5. Insulation Checking Procedure: Disconnect the power cord from the AC source and turn the power switch ON. Connect an insulation resistance meter (500 V) to the blades of the AC plug.

   The insulation resistance between each blade of the AC plug and accessible conductive parts (see above) should be greater than 1 megohm.
6. Always connect a test instrument s ground lead to the instrument chassis ground before connecting the positive lead; always remove the instrument s ground lead last.

1-3 Static Electricity Precautions

Some semiconductor (solid state) devices can be easily damaged by static electricity. Such components are commonly called Electrostatically Sensitive Devices (ESD). Examples of typical ESD are integrated circuits and some field-effect transistors. The following techniques will reduce the incidence of component damage caused by static electricity.

1. Immediately before handling any semiconductor components or assemblies, drain the electrostatic charge from your body by touching a known earth ground. Alternatively, wear a discharging wrist-strap device. To avoid a shock hazard, be sure to remove the wrist strap before applying power to the monitor.
2. After removing an ESD-equipped assembly, place it on a conductive surface such as aluminum foil to prevent accumulation of an electrostatic charge.
3. Do not use freon-propelled chemicals. These can generate electrical charges sufficient to damage ESDs.
4. Use only a grounded-tip soldering iron to solder or desolder ESDs.
5. Use only an anti-static solder removal device. Some solder removal devices not classified as anti-static can generate electrical charges sufficient to damage ESDs.
6. Do not remove a replacement ESD from its protective package until you are ready to install it. Most replacement ESDs are packaged with leads that are electrically shorted together by conductive foam, aluminum foil or other conductive materials.
7. Immediately before removing the protective material from the leads of a replacement ESD, touch the protective material to the chassis or circuit assembly into which the device will be installed.

   Caution: **Be sure no power is applied to the chassis or circuit and observe all other safety precautions.**
8. Minimize body motions when handling unpackaged replacement ESDs. Motions such as brushing clothes together, or lifting your foot from a carpeted floor can generate enough static electricity to damage an ESD.

ELECTRONIC SERVICE TIRGOVISTE

1-4 Installation Precautions

1. For safety reasons, more than two people are required for carrying the product.

2. Keep the power cord away from any heat emitting devices, as a melted covering may cause fire or electric shock.

3. Do not place the product in areas with poor ventilation such as a bookshelf or closet. The increased internal temperature may cause fire.

4. Bend the external antenna cable when connecting it to the product. This is a measure to protect it from being exposed to moisture. Otherwise, it may cause a fire or electric shock.

5. Make sure to turn the power off and unplug the power cord from the outlet before repositioning the product. Also check the antenna cable or the external connectors if they are fully unplugged. Damage to the cord may cause fire or electric shock.

6. Keep the antenna far away from any high-voltage cables and install it firmly. Contact with the high-voltage cable or the antenna falling over may cause fire or electric shock.

7. When installing the product, leave enough space (10cm) between the product and the wall for ventilation purposes.
   A rise in temperature within the product may cause fire.

ELECTRONIC SERVICE
TIRGOVISTE

Memo

ELECTRONIC SERVICE
TIRGOVISTE

3 Alignments and Adjustments

3-1 Service Instruction

1. Usually, a color TV-VCR needs only slight touch-up adjustment upon installation. Check the basic characteristics such as height, horizontal and vertical sync.
2. Use the specified test equipment or its equivalent.
3. Correct impedance matching is essential.
4. Avoid overload. Excessive signal from a sweep generator might overload the front-end of the TV. When inserting signal markers, do not allow the marker generator to distort test result.
5. Connect the TV only to an AC power source with voltage and frequency as specified on the backcover nameplate.
6. Do not attempt to connect or disconnect any wire while the TV is turned on. Make sure that the power cord is disconnected before replacing any parts.
7. To protect aganist shock hazard, use an isolation transform.

ELECTRONIC SERVICE TIRGOVISTE

3-2 How to Access Service Mode

3-2-1 Entering Factory Mode

1. To enter "Service Mode" Press the remote -control keys in this sequence :
   - If you do not have Factory remote - control

Power OFF → INFO → MENU → MUTE → Power ON

- If you have Factory remote - control

PICTURE ON → DISPLAY → FACTORY

- The buttons are active in the service mode.
  1. Remote - Control Key : Power, Arrow Up, Arrow Down, Arrow Left
     Arrow Right, Menu, Enter, Number Key(0~9)
  2. Function - Control Key : Power, CH +, CH -, VOL +, VOL -,
     Menu, TV/VIDEO(Enter)

3-2-2 Panel Check

Specially for LE32R71B, You have to check Panel Maker Because of different adjustments as follows.
First of all, Check the label rating!

1) Label Rating File

- LCD PANEL MARK -
A:ACER(AUO) S:SEC

* If not printed you could consider S(sec) panel mark.

2) If Panel Mark is "A", Set the factory mode indicating as follows.

* Option Byte

1. Inch Option 32"
2. Gamma 32"AUO
3. Panel Option AUO

Others are same shown below.

ELECTRONIC SERVICE TIRGOVISTE

3-3 Factory Data

1. Calibration
2. Option Table XXXX XXXX
3. White Balance
4. SVP-PX
5. Option Block
6. STV8257/STA323W
7. YC Delay
8. Adjust
9. I2C Check
10. W/B MOVIE
11. Checksum
12. Reset
13. Spread Spectrum

T-BRDMPEUD-0036 (Main Micom Ver)
T-CBGMPEUS-0004 (Sub Micom Ver)
Month / Day / Year / Hour / Min. / Sec.

1. Calibration
   1) AV Calibration
   2) COMP Calibration
   3) PC Calibration
   4) HDMI Calibration

2. Option Table XXXX XXXX

Inch Option	32"	Carrier Mute	ON	TTX Group	Auto
Gamma	OFF	Language	English	Auto Power	ON
Panel Option	AMLCD_INT	Auto FM	ON	----	OFF
2HDMI	OFF	High Deviation	OFF	----	G
Brt.Sensor	OFF	TTX	ON	----	OFF
EnergySave	ON	TTX List	ON	Debug	OFF
LBE/FBE	OFF	ACR	OFF	Ch.Table	SUWON
FRC(Micronas)	OFF	Dynamic CE	ON	iDTV_Cntry	UK
FRC(Samsung)	OFF	Dynamic Dimming	ON	Dynamic Contrast	OFF
LNA	OFF	Tuner TOP	10		

ELECTRONIC SERVICE TIRGOVISTE

3. White Balance

No	Item		TV/AV	Component	PC	DVI(HDMI)
1	Sub-Briteness	0~255	**80**	**115**	128	**140**
2	R-offset	0~255	**120**	**130**	128	**129**
3	G-offset	0~255	**128**	**128**	128	**128**
4	B-offset	0~255	**113**	**128**	128	**128**
5	Sub-Contrast	0~63	**36**	**32**	32	**28**
6	R-Gain	0~255	**140**	**129**	128	**130**
7	G-Gain	0~255	**128**	**128**	128	**128**
8	B-Gain	0~255	**150**	**129**	128	**120**

4. SVP-EX

1. ComB Filter

No	Item	Range	EEPROM	NTSC	PAL	SECAM		Control IC	Remark
1	Y-Filter	0 ~ 255		80h					x

2. Peaking

No	Item	Range	EEPROM	TV	AV	Component		Control IC	Remark
1	V-Peaking	0 ~ 255		80h					x
2	Peaking Delay	0 ~ 255		80h					x
3	Peaking Gain	0 ~ 255		80h					x
4	Peaking Width	0 ~ 255		80h					x
5	Praking f0	0 ~ 255		80h					x

3. NR

No	Item	Range	EEPROM	TV/AV/S_Video	Component	PC	DVI/HDMI	Control IC	Remark
1	Y-NR-Off	0 ~ 255		80h					x
2	C-NR-Off	0 ~ 255		80h					x
3	Y-NR-ON	0 ~ 255		80h					x
4	C-NR-ON	0 ~ 255		80h					x

4. Deinterlace

No	Item	Range	EEPROM	TV/AV/S_Video	Component	PC	DVI/HDMI	Control IC	Remark
1	Motion	0 ~ 255		80h					x

5. Picture Gain Adjust

No	Item	Range	EEPROM	TV/AV/S_Video	Component	PC	DVI/HDMI
1	TCD3 Contrast	0 ~ 255		AV Calibration(**78h**)	78h	78h	78h
2	TCD3 Brightness	0 ~ 255		AV Calibration(**20h**)	20h	20h	20h
3	TCD3 CR Saturation	0 ~ 255		78h	78h	78h	78h
4	TCD3 CB Saturation	0 ~ 255		78h	78h	78h	78h
5	TCD3 YC Delay	0 ~ 15		00h	00h	00h	00h
6	Analog Y offset	00 ~ 255		40h	3	40h	40h
7	Analog PB offset	00 ~ 255		80h	DTV Calibration(**80h**)	80h	80h
8	Analog PR offset	00 ~ 255		80h	DTV Calibration(**80h**)	80h	80h
9	Analog Y Gain	00 ~ 255		D6h	DTV Calibration(**D6h**)	D6h	D6h
10	Analog PB Gain	00 ~ 255		FEh	FEh	FEh	FEh
11	Analog PR Gain	00 ~ 255		FEh	FEh	FEh	FEh
12	Black Level Setting	00 ~ 255		00h			
13	Brightness(SVP)	0 ~ 255		00h			

5. MST9883

No	Item	Range	EEPROM	TV/AV/S_Video	Component	PC	DVI/HDMI
1	R-Offset	00 ~ 255		151 *(SC1 RGB)*	X	PC Calibration(**128**)	X
2	G-Offset	00 ~ 255		151 *(SC1 RGB)*		PC Calibration(**128**)	
3	B-Offset	00 ~ 255		151 *(SC1 RGB)*		PC Calibration(**128**)	
4	R-Gain	00 ~ 255		123 *(SC1 RGB)*		PC Calibration(**192**)	
5	G-Gain	00 ~ 255		123 *(SC1 RGB)*		PC Calibration(**192**)	
6	B-Gain	00 ~ 255		123 *(SC1 RGB)*		PC Calibration(**192**)	

6. MSP34XX/44XX

No	Item	Range	EEPROM	PAL
1	FM-Prescale	00 ~ 255		20h
2	NT-M-Prescale	00 ~ 255		20h
3	SECAM-L-Prescale	00 ~ 255		22h
4	NICAM-Prescale	00 ~ 255		42h
5	AV-Prescale	00 ~ 255		1Ah
6	I2S_1 Prescale	00 ~ 255		10h
7	I2S_2 Prescale	00 ~ 255		10h
8	Carrier Mute	00 ~ 255		42h
9	Pilot High	00 ~ 255		14
10	Pilot Low	00 ~ 255		7

7. YC Delay

No	Item	Range	EEPROM	TV/AV/S_Video	Component	PC	DVI/HDMI
1	RF PAL-B/G	00 ~ 255		77h	88h	88h	88h
2	RF PAL-D/K	00 ~ 255		88h			
3	RF PAL- I	00 ~ 255		66h			
4	RF SECAM-B/G	00 ~ 255		88h			
5	RF SECAM-D/K	00 ~ 255		77h			
6	RF SECAM-L/L'	00 ~ 255		88h			
7	RF NTSC3.58	00 ~ 255		66h			
8	RF NTSC4.43	00 ~ 255		CCh			
9	AV PAL	00 ~ 255		77h			
10	AV SECAM	00 ~ 255		BBh			
11	AV NTSC 3.58	00 ~ 255		66h			
12	AV NTSC4.43	00 ~ 255		CCh			
13	AV PAL60	00 ~ 255		77h			

ELECTRONIC SERVICE TIRGOVISTE

8. Adjust

No	Item	Range	EEPROM	TV/AV/S_Video	Component	PC	DVI/HDMI	Control IC	Remark
1	Video Mute Time			10					
2	Melody Volume	0 ~ 20		5					
	Ana_Dimm_Max			FEH					
3	TTX Contrast	0 ~ 100		50					
4	TTX Brightness	0 ~ 100		50					
5	TTX Color	0 ~ 100		50					
6	Dynamic Contrast	0 ~ 100		100					Dynamic mode
7	Dynamic Brightness	0 ~ 100		50					
8	Dynamic Color	0 ~ 100		55					
9	Dynamic Sharpness	0 ~ 100		75					
10	Standard Contrast	0 ~ 100		80					Standard mode
11	Standard Brightness	0 ~ 100		50					
12	Standard Color	0 ~ 100		50					
13	Standard Sharpness	0 ~ 100		50					
14	Movie Contrast	0 ~ 100		70					Movie mode
15	Movie Brightness	0 ~ 100		50					
16	Movie Color	0 ~ 100		25					
17	Movie Sharpness	0 ~ 100		45					
No	Item	Range	EEPROM	TV/AV/S-Video	Component/PC/HDMI				
1	LNA PLUS								
2	RFDB_1 Level			1					
3	RFDB_2 Level			5	x			P4 CVD2 0x7F [07..00]	
4	RFDB_3 Level			10					
5	RFDB_4 Level			16					

9. I2C Check

10. Chip Debugger : OFF

11. Checksum XXXX XXXX

12. Reset

13. Spread Spectrum

1	Spectrum	ON
2	Delta	-3
3	Positive	8
4	Nagative	2

ELECTRONIC SERVICE TIRGOVISTE

3-4 Service Adjustment

3-4-1 White Balance - Calibration

If picture color is wrong, do calibration first.

Equipment : CA210, Patten : chess pattern
Execute calibration in Factory Mode
Source AV : PAL composite, Component : 1280*720/60Hz
PC : 1024*768/60Hz

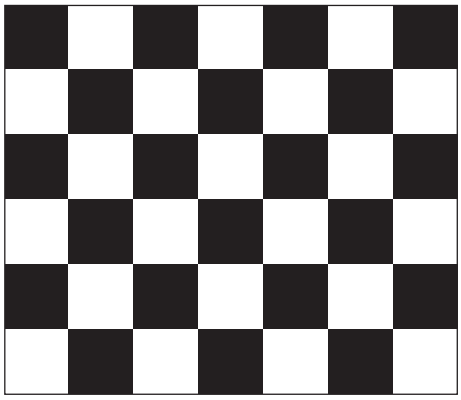

(chess patten)

3-4-2 White Balance - Adjustment

If picture color is wrong, check White Balance condition.

Equipment : CA210, Patten : Toshiba
Adjust W/B in Factory Mode

Sub brightness and R/G/B Offset controls low light region
Sub contrast and R/G/B Gain controls high light region
Source AV : PAL composite, Component : 1280*720/60Hz
HDMI[DVI] : 1280*720/60Hz

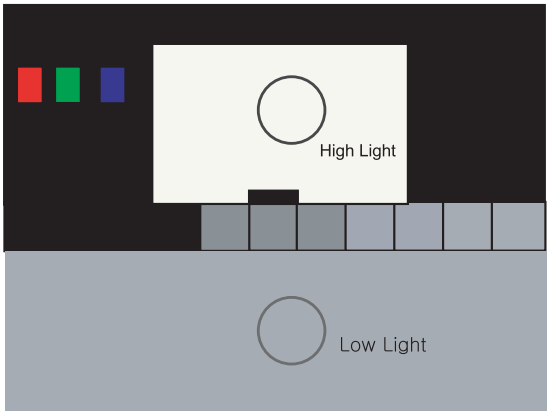

[Test Pattern : MSPG-945 Series Pattern #16]

*Color temperature
1500K +/-500, -6 ~-20 MPCD

*Color coordinate
H/L : 267/263 +/- 2 35.0 Ft +/- 2.0Ft
L/L : 270/260 +/- 3 1.5 Ft +/- 0.2Ft

Toshiba Patten

ELECTRONIC SERVICE TIRGOVISTE

3-4-3 Conditions for Measurement

1. On the basis of toshiba ABL pattern : High Light level (57 IRE)
   - INPUT SIGNAL GENERATOR : MSPG-925LTH
     * Mode NO 2 : 744X484@60 Hz
       NO 6 : 1280X720@60 Hz
       NO 21 : 1024X768@60 Hz
     * Pattern NO 36 : 16 Color Pattern
       NO 16 : Toshiba ABL Pattern
2. Optical measuring device : CA210 (FL)
   Please use the MSPG-925 LTH generator for model LE26M51B/LE32M51B/LE40M51B/LE46M51B.

3-4-4 Method of Adjustment

1. Adjust the white balance of AV, Component and DVI Modes.
   (AV ⟶ Component)
   a) Set the input to the mode in which the adjustment will be made
   (RF ⟶ DTV ⟶ PC ⟶ DVI).
   * Input signal - VIDEO Mode : Model #2 (744*484 Mode), Pattern #16
   - DTV,DVI Mode : Model #6 (1280*720 Mode), Pattern #16
   - HDMI Mode: Model #6(1280*720 Mode), Pattern #16

   b) Enter factory color control, confirm the data.

   c) Adjust the low light. (Refer to table 1, 2 in adjustment position by mode)
   - Adjust sub - Brightness to set the 'Y' value.
   - Adjust red offset ('x') and blue offset ('y') to the color coordinates.

Picture 4-2 Toshiba ABL Pattern

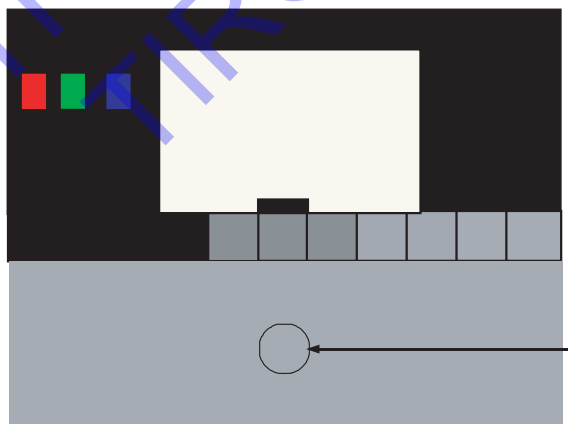

   * Do not adjust green offset data.

   d) Adjust the high light. (Refer to table 1, 2 in adjustment position by mode)
   - Adjust red gain ('x') and blue gain ('y') to the color coordinates.
   * Do not adjust the green gain and sub-contrast (Y) data.

ELECTRONIC SERVICE TIRGOVISTE

d) Adjust the high light. (Refer to table 1, 2 in adjustment position by mode)

- Adjust red gain ('x') and blue gain ('y') to the color coordinates.

* Do not adjust the green gain and sub-contrast (Y) data.

Picture 4-3 Toshiba ABL Pattern

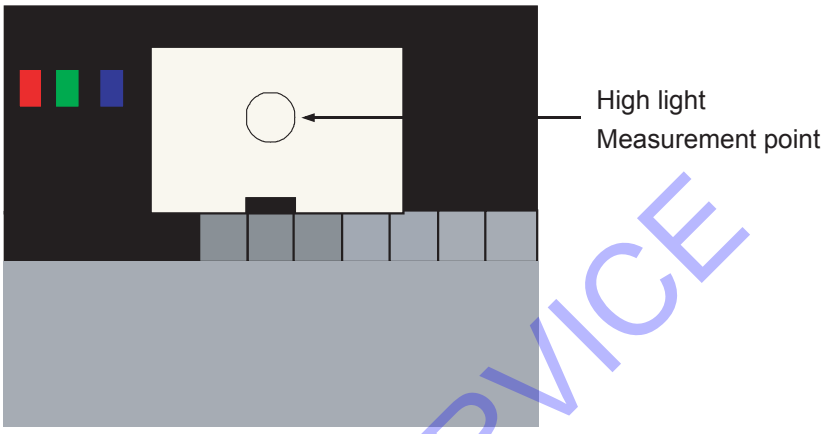

ELECTRONIC SERVICE
TIRGOVISTE

3-5 Software Upgrade

3-5-1 How to Update Flash ROM

1. Install the Flash Downloader
   Connect Set(Service Jack) and Jig Cable to execute Program Update.

2. Flash Downloader program update
   -Before Turning on the set, Click "connect" which is under of OSD Screen!
   -Turn on the Set.

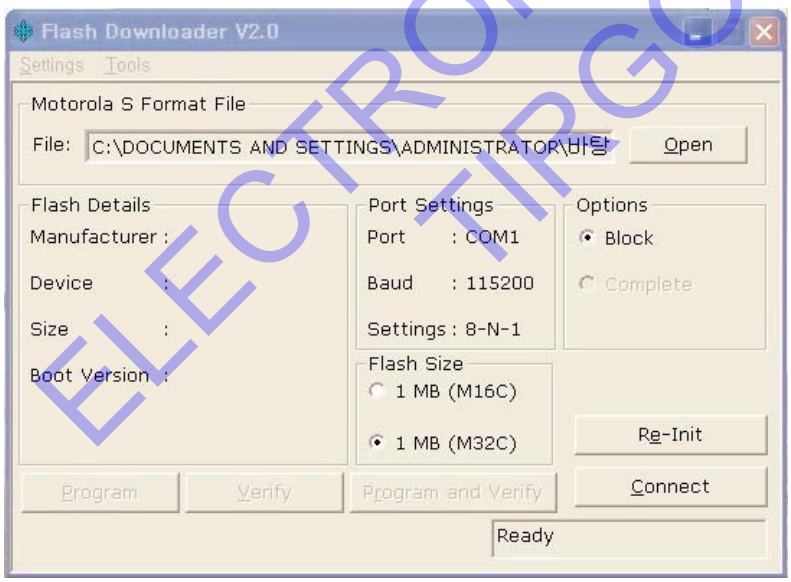

ELECTRONIC SERVICE TIRGOVISTE

3-6 DTV Program Download & Generals

3-6-1 Software Version Check Method

Press the MENU key and select System.

Where you can find the Prodect Information menu in it.

When you press the Product Information you can find the Software Version.

3-6-2 Serial Download Method

1) Turn off LCD-TV.
2) Connect the RS-232 cable to the LCD-TV
3) Execute the sv2_fr.exe file.
4) Assign the path of samsung.tvz file (application image)
5) Execute the progress follow the screen until step 2.
6) Turn On the LCD-TV.
7) If the LCD-TV turn on during the sv2_fr.exe execution, it will automatically find the COM port and execute the upgrade.

3-6-3 Hyper Terminal Setting

Set the hyper terminal to observe the progress of the TV via the RS-232 cable.

Set up hyper terminal.

1) When setting up a hyper terminal, set it in sub-program.
2) Enter a new name.
3) Select a modem port. (com 1 and direct connection.)
4) Set the bit/second to 115200.
5) Set the data bit to 8.
6) No parity bit.
7) Set stop bit to 1.
8) No flow control.
9) Save in memory.
10) At this point, the new hyper terminal is ready.

3-6-4 Resetting the System Parameters

1) Press the MENU button and select the Reset menu of System.
2) Press the secret number.
3) Press the RED, GREEN, YELLOW, BLUE button in order, after the Reset execute.
4) In a few minutes, DTV will booting again.

ELECTRONIC SERVICE TIRGOVISTE

4 Troubleshooting

4-1 First Checklist for Troubleshooting

1. Check the various cable connections first.
   - Check to see if there is a burnt or damaged cable.
   - Check to see if there is a disconnected cable connection or a connection is too loose.
   - Check to see if the cables are connected according to the connection diagram.

2. Check the power input to the Main Board.

3. Check the voltage in and out between the SMPS ↔ Main Board, between the SMPS ↔ INVERTER Board, and between the Main LVDS Boards.

ELECTRONIC SERVICE TIRGOVISTE

4-2 Checkpoints by Error Mode

4-2-1 No Power

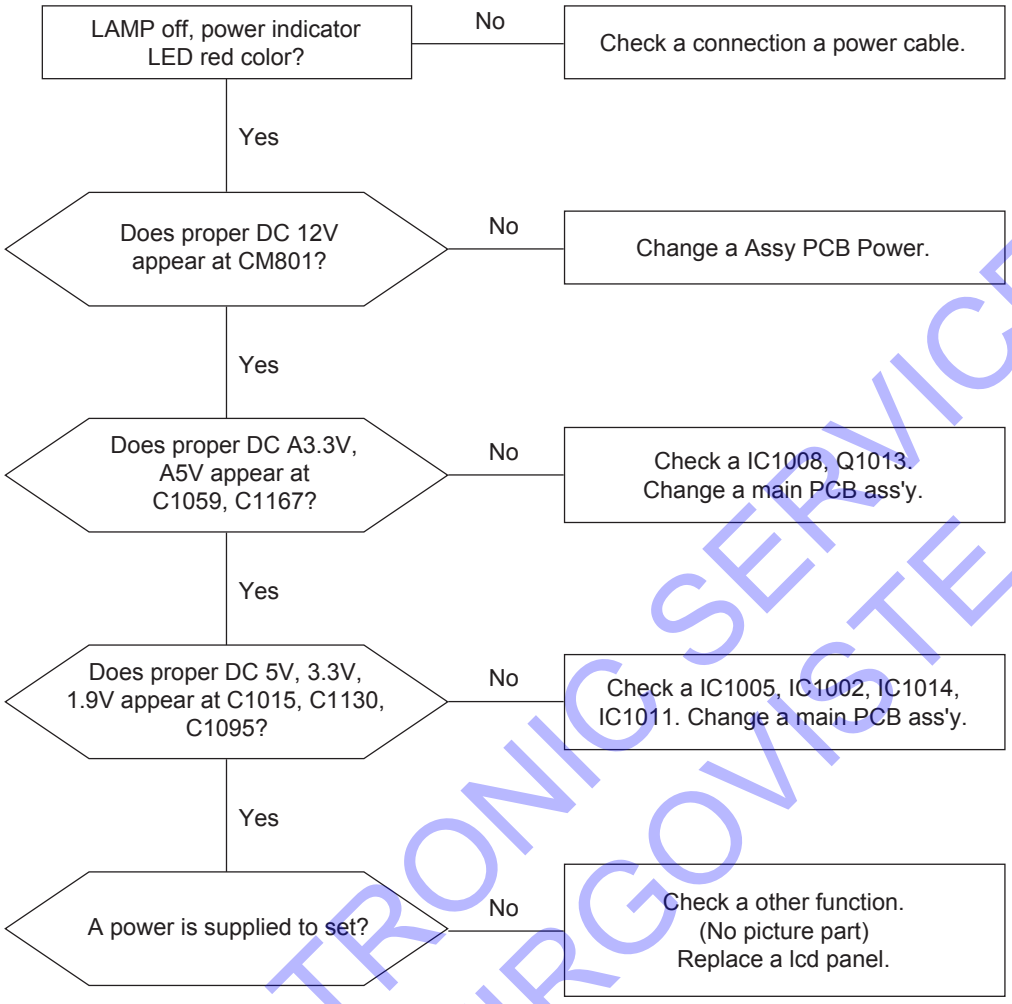

ELECTRONIC SERVICE TIRGOVISTE

4-2-2 No Video (Analog PC)

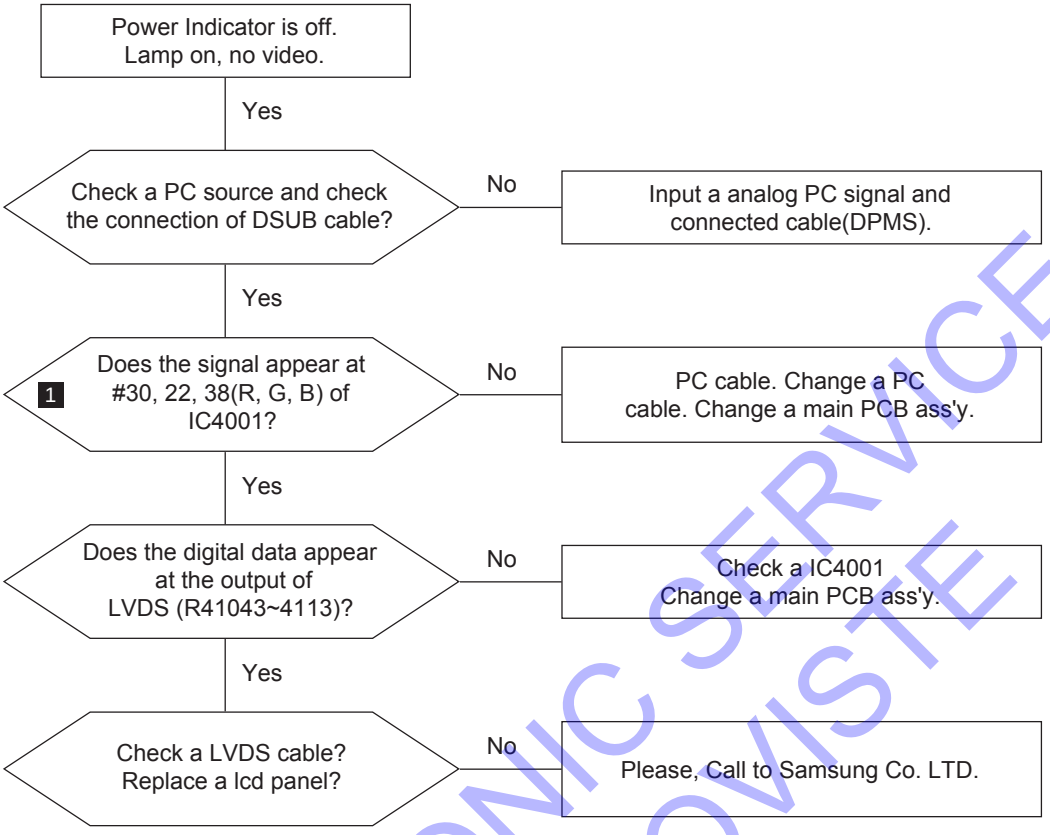

ELECTRONIC SERVICE TIRGOVISTE

WAVEFORMS

1 R,G,B Output Signal of IC500

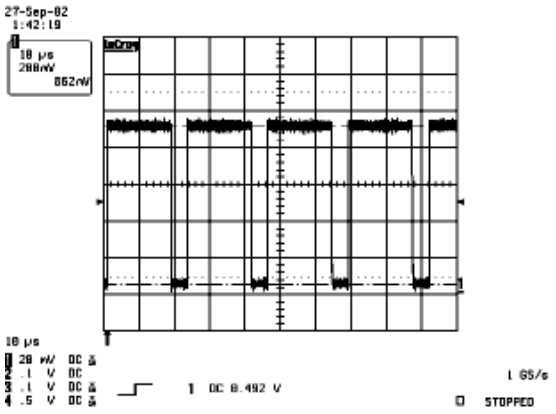

ELECTRONIC SERVICE
TIRGOVISTE

4-2-3 No Video (Digital-HDMI)

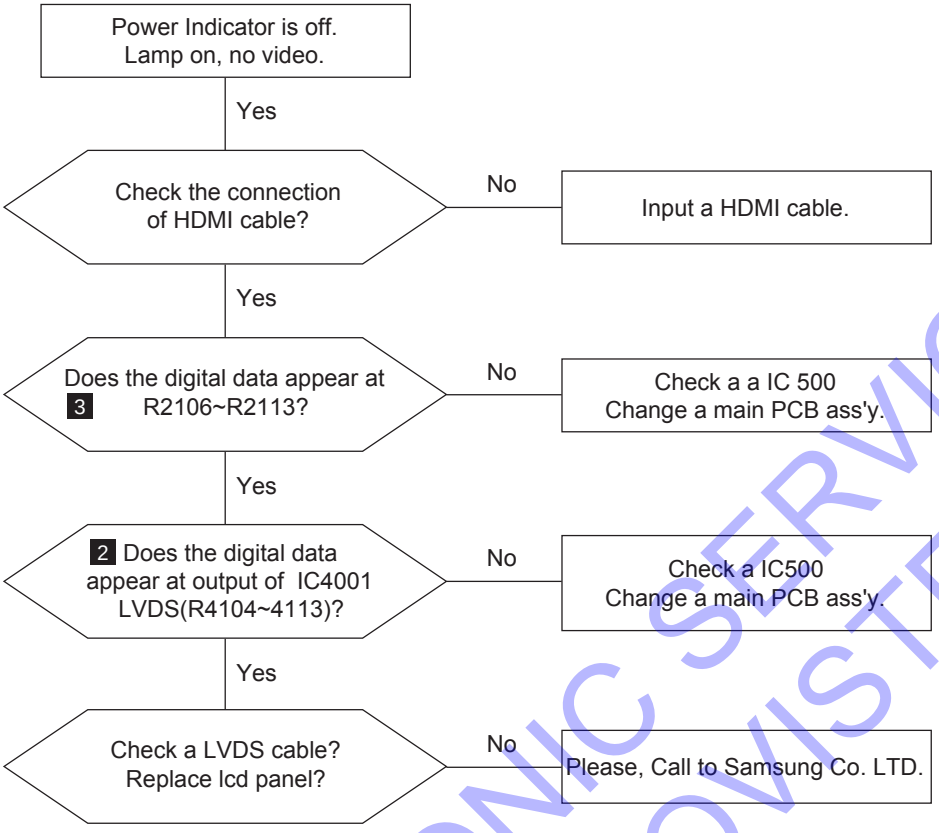

ELECTRONIC SERVICE TIRGOVISTE

2 Digital Output Data of IC500

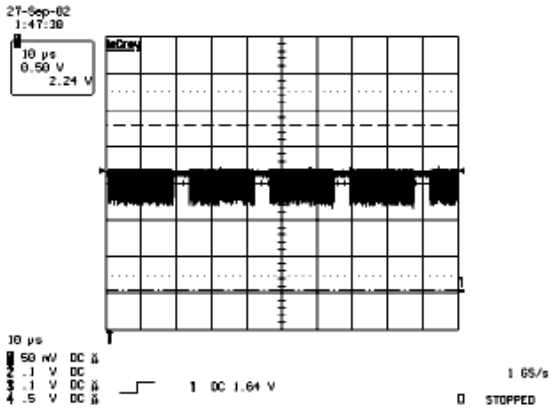

3 Signal of HDMI(Data)

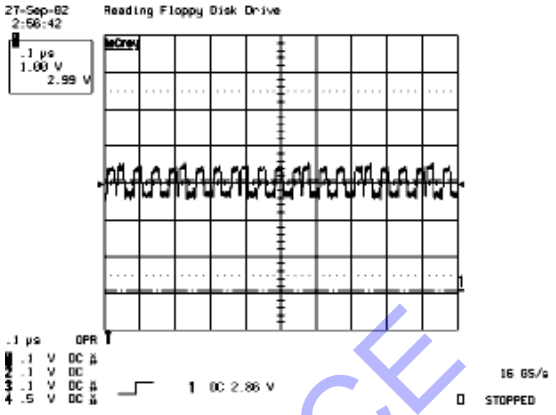

ELECTRONIC SERVICE
TIRGOVISTE

4-2-4 No Picture (Tuner_CVBS)

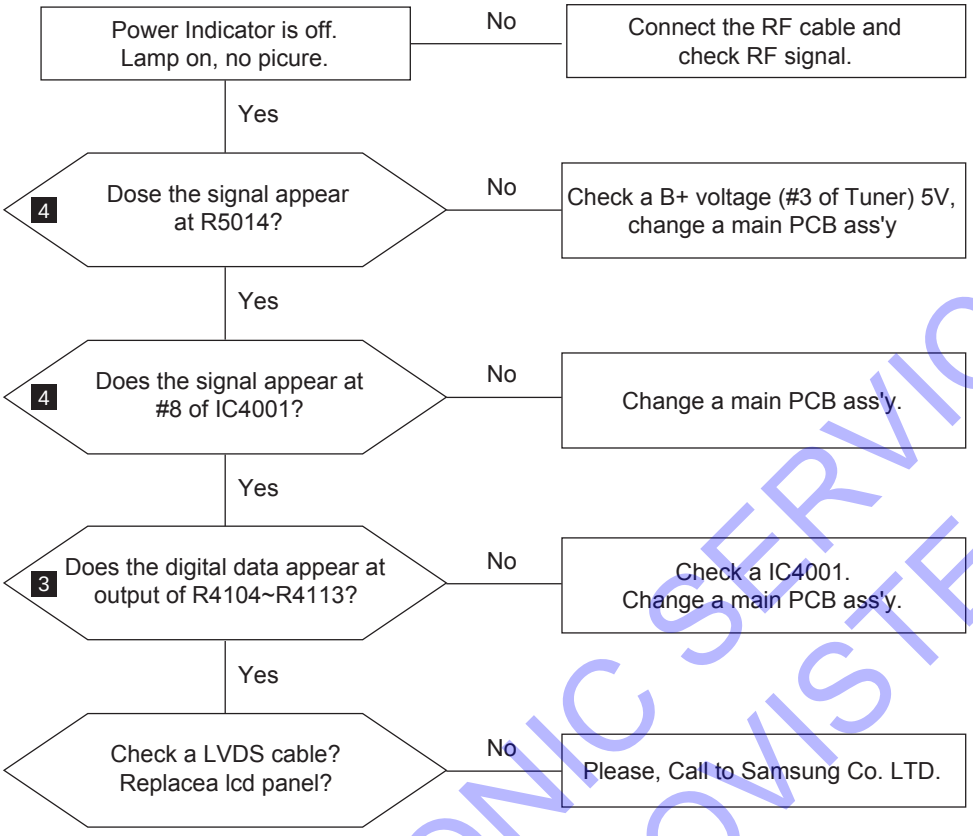

ELECTRONIC SERVICE
TIRGOVISTE

WAVEFORMS

3 CVBS Output Signal

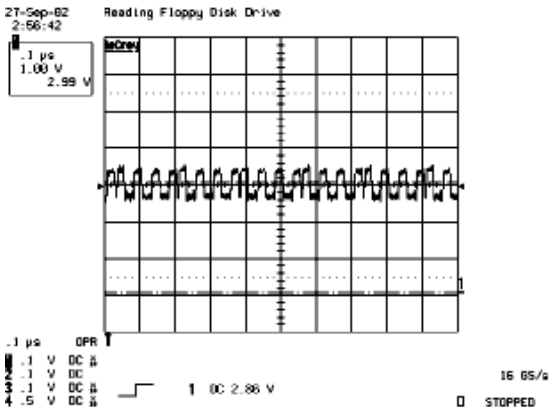

4 Tuner_CVBS Output Signal

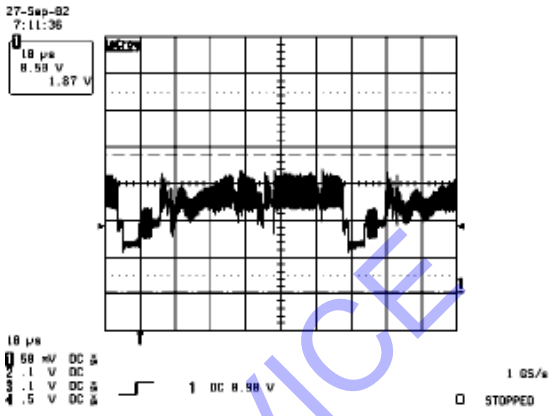

ELECTRONIC SERVICE
TIRGOVISTE

4-2-5 No Picture (Video_CVBS)

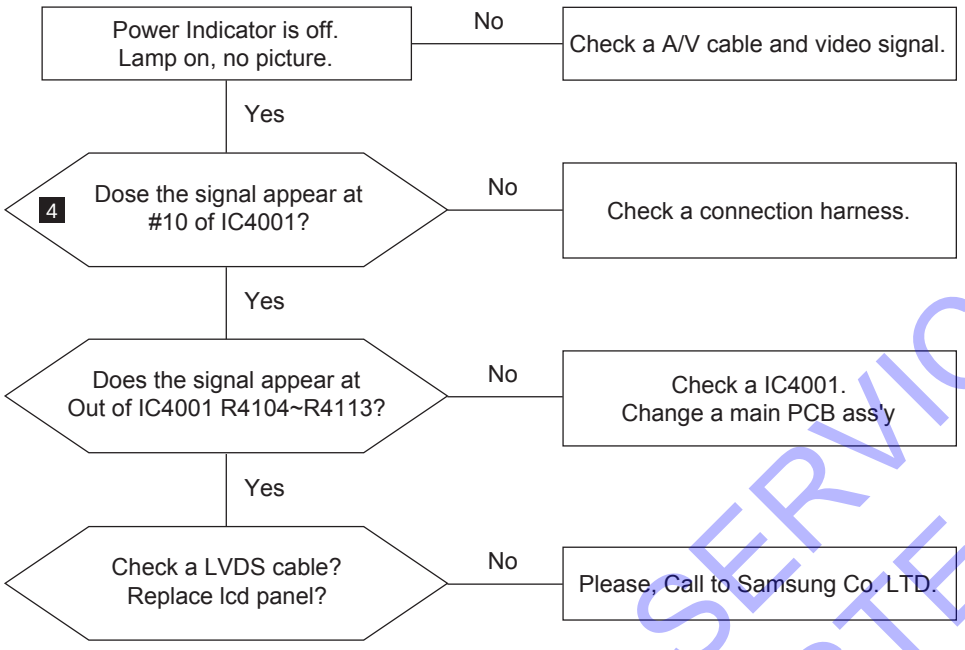

ELECTRONIC SERVICE
TIRGOVISTE

WAVEFORMS

4 CVBS Output Signal

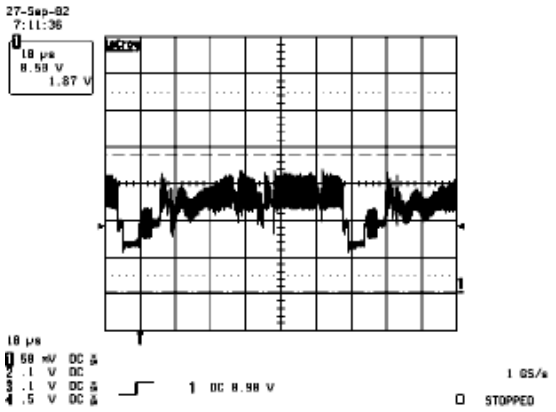

ELECTRONIC SERVICE
TIRGOVISTE

4-2-6 No Picture (S-VIDEO_Y,C)

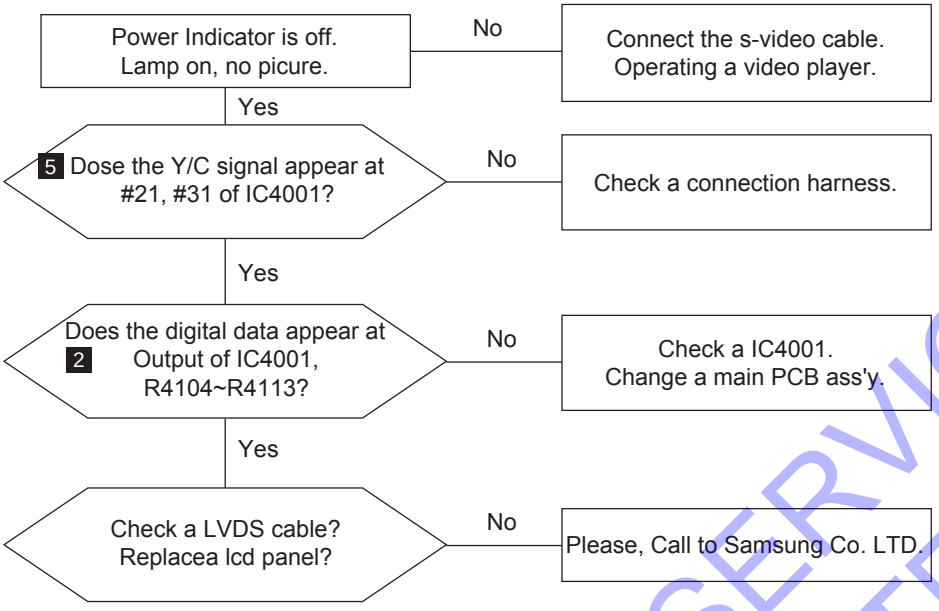

ELECTRONIC SERVICE
TIRGOVISTE

WAVEFORMS

2 Digital Output Data of IC500

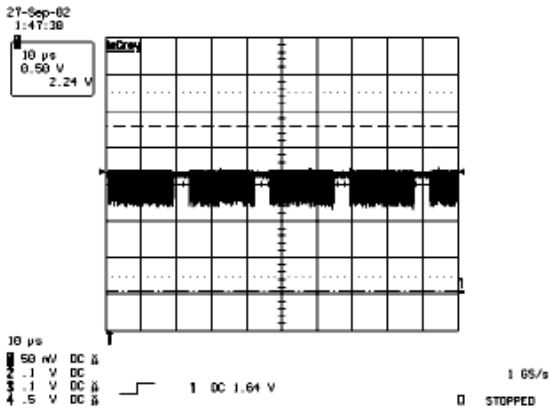

5 Analog Signal(Y,C) to IC500

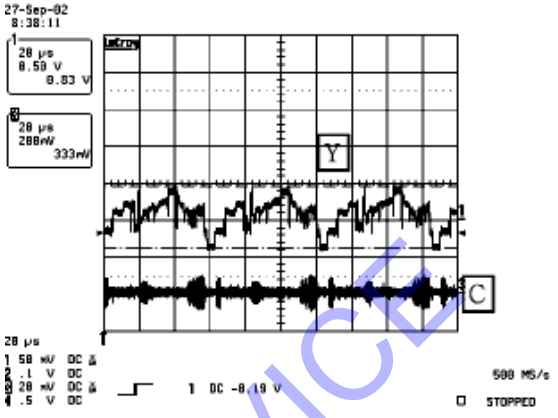

ELECTRONIC SERVICE
TIRGOVISTE

4-2-7 No Sound

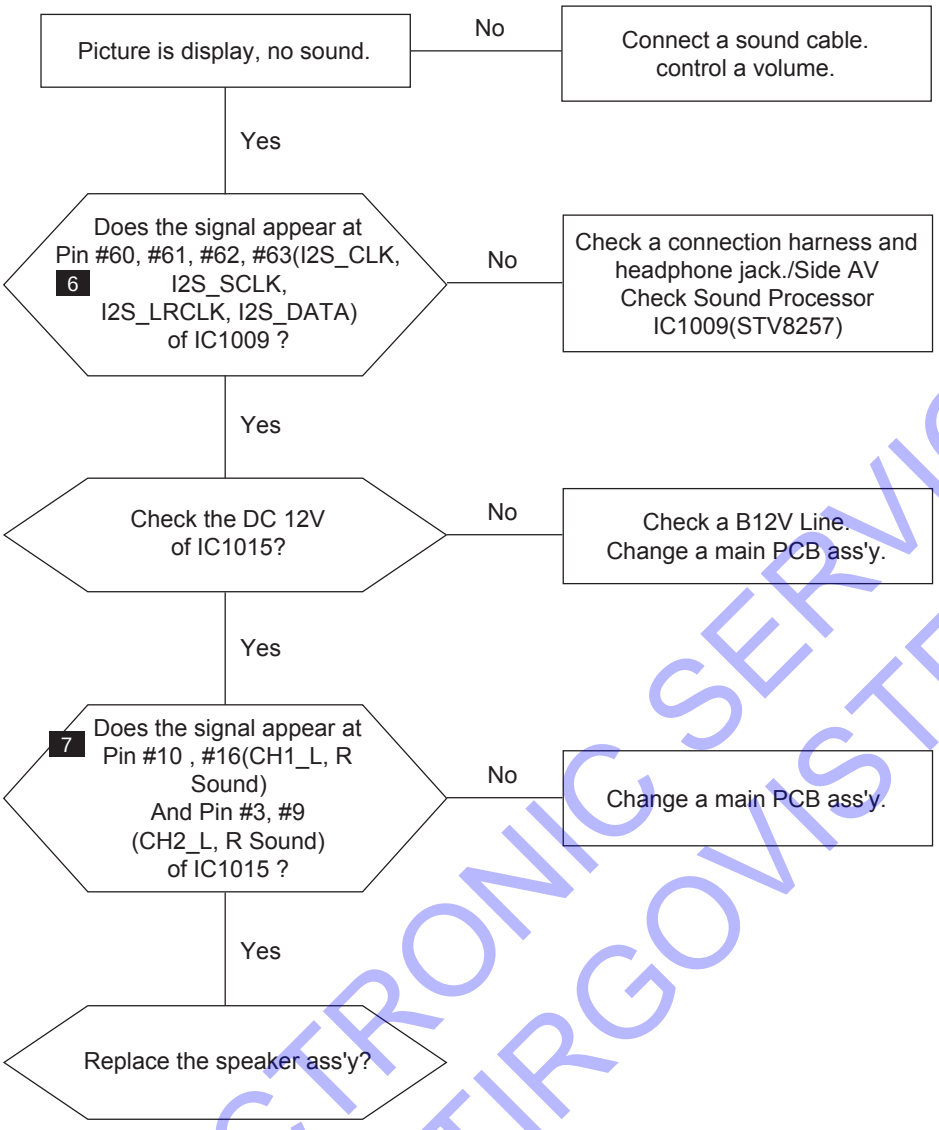

ELECTRONIC SERVICE
TIRGOVISTE

WAVEFORMS

6 The Signal are Inputed to IC603

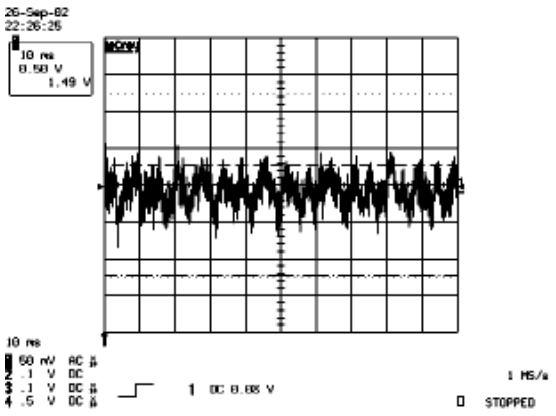

7 DC +12V

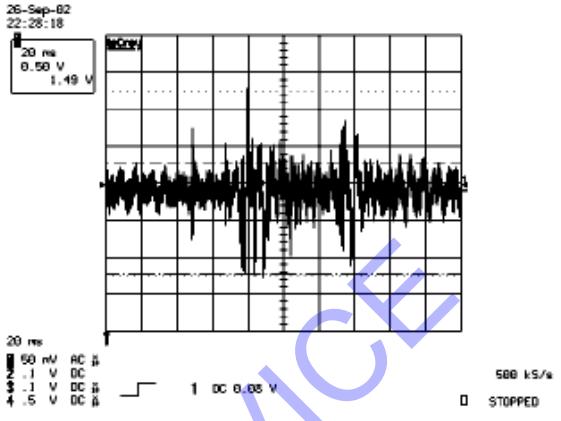

ELECTRONIC SERVICE
TIRGOVISTE

5 Exploded View and Parts List

- You can search for updated part codes through ITSELF web site.
  URL : http://itself.sec.samsung.co.kr/

5-1 LE26R73BD Exploded View

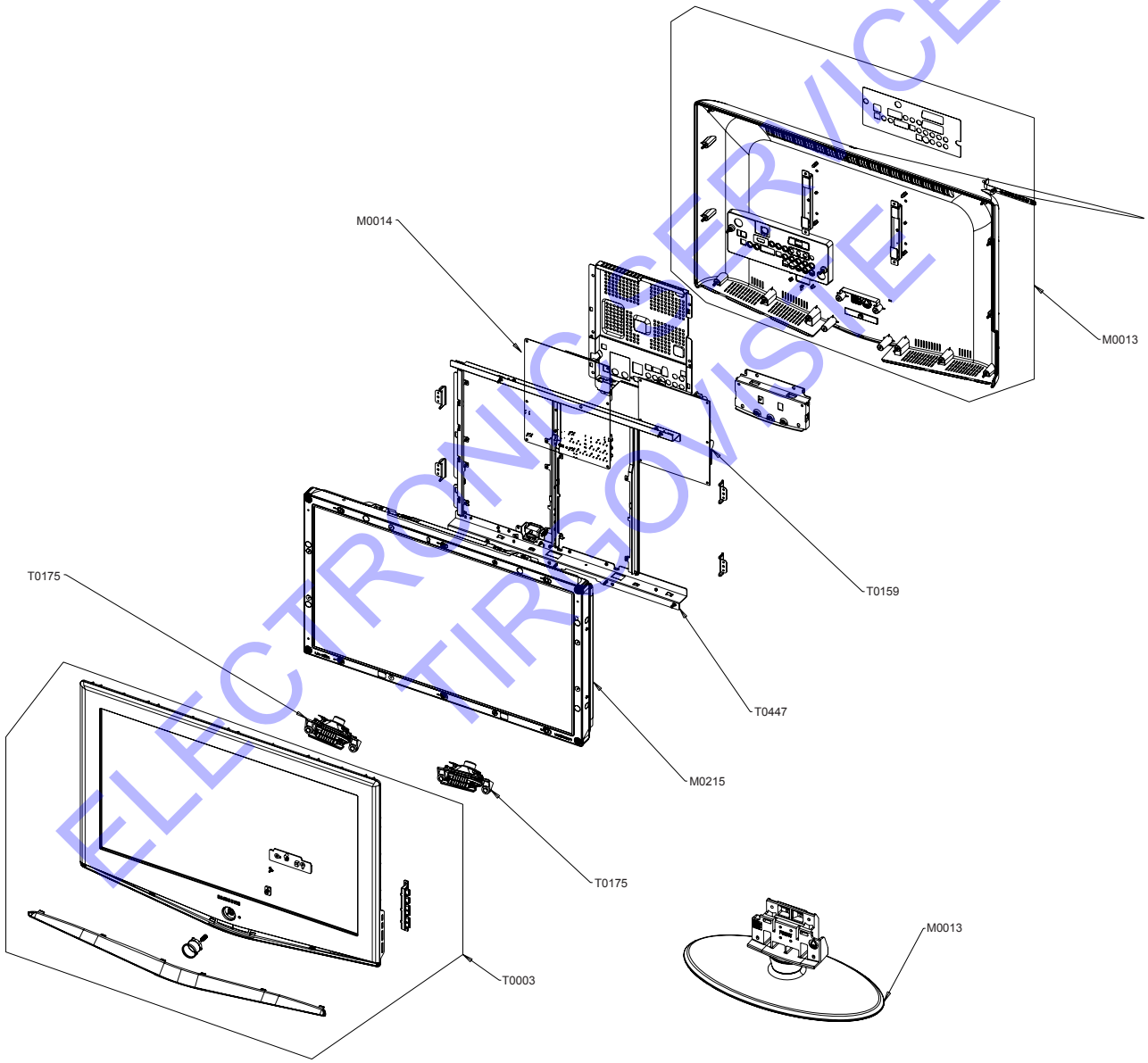

ELECTRONICSERVICE TIRGOVISTE

5-2 LE26R73BD Parts list

Location	Code.No	Item & Specification	Q'ty	SA/SNA	Remark
T0003	BN96-03012C	ASSY COVER P-FRONT;26R73,EO,ABS+PMMA,HB,	1	SA	
T0175	BN96-03053A	ASSY SPEAKER P;16ohm,Bordeuax 26,Left,5W	1	SA	
T0175	BN96-03054A	ASSY SPEAKER P;16ohm,Bordeuax 26,Right,5	1	SA	
M0215	BN07-00254A	LCD-PANEL;T260XW02,8bit,626.0*373.0*50.0	1	SA	
T0447	BN96-03439B	ASSY BRACKET P-PANEL;26,SECC,BUILT-IN,AU	1	SNA	
M0014	BN94-01001A	ASSY PCB MAIN-AMZ;LE26R74BDX/*	1	SNA	
T0159	BN96-03058A	ASSY PCB P-SMPS;Bordeaux 26 PFC,LE26R71B	1	SA	
M0013	BN96-03245A	ASSY COVER P-REAR;26R73,EO,ABS+PMMA,HB,B	1	SA	
M0013	BN96-03017A	ASSY STAND P-BASE;26R71,ABS+PMMA,HB,BK23	1	SA	

ELECTRONIC SERVICE
TIRGOVISTE

5-3 LE32R73BD Exploded View

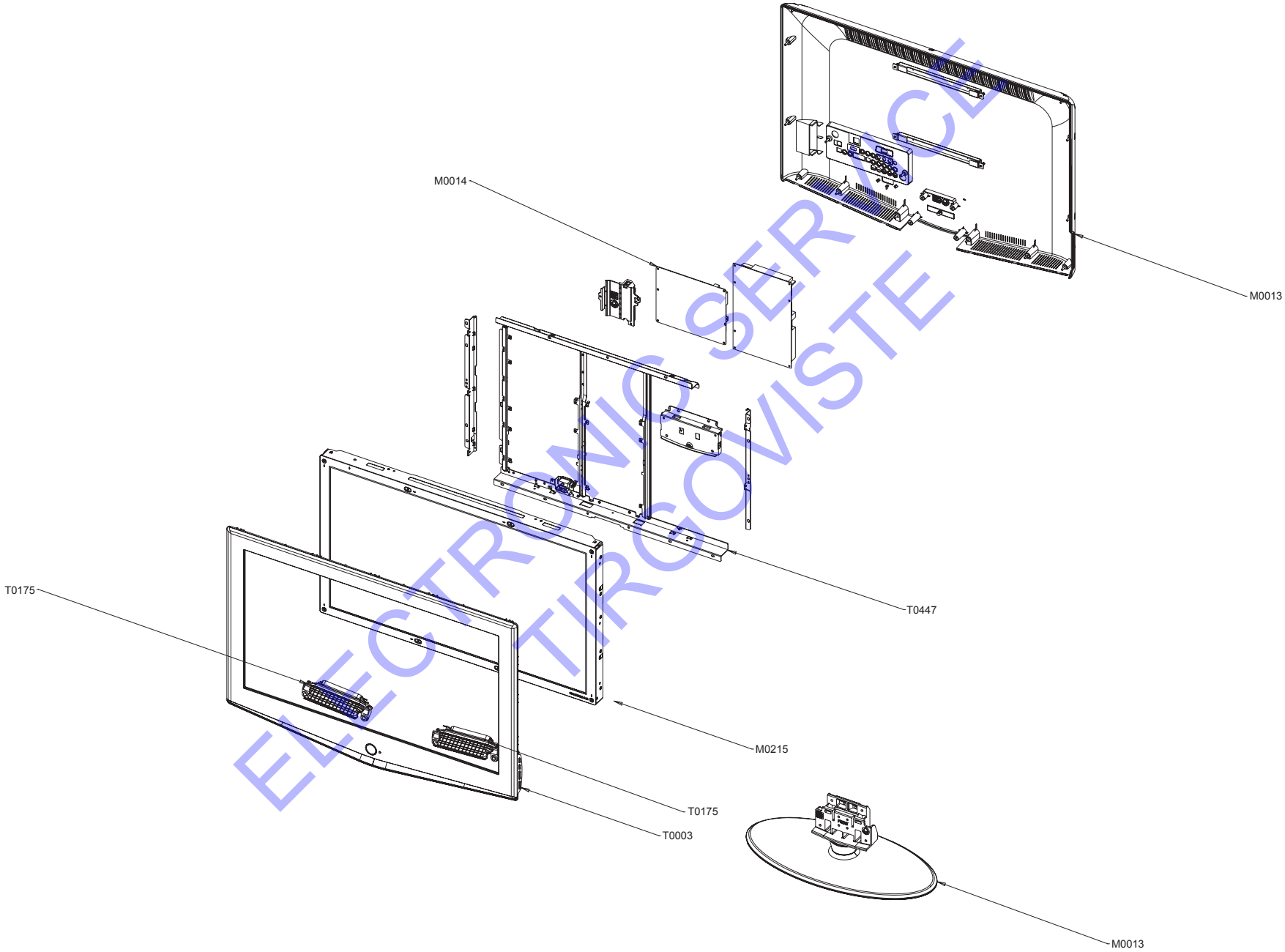

ELECTRONIC SERVICE TIRGOVISTE

5-4 LE32R73BD Parts list

Location	Code.No	Item & Specification	Q'ty	SA/SNA	Remark
T0003	BN96-02996E	ASSY COVER P-FRONT;32R73,EO,ABS+PMMA,HB,	1	SA	
T0175	BN96-03002A	ASSY SPEAKER P;8ohm,Bordeuax 32"/37"/40"	1	SA	
T0175	BN96-03003A	ASSY SPEAKER P;8ohm,Bordeuax 32"/37"/40"	1	SA	
M0215	BN07-00247A	LCD-PANEL;LTA320WT-L14,-,8BIT,760*450*50	1	SA	
T0447	BN96-03440A	ASSY BRACKET P-PANEL;32,SECC,BUILT-IN	1	SNA	
M0014	BN94-01001B	ASSY PCB MAIN-AMZ;LE32R74BDX/*	1	SA	
M0013	BN96-03244A	ASSY COVER P-REAR;32R73,EO,ABS+PMMA,HB,B	1	SA	
M0013	BN96-02998A	ASSY STAND P-BASE;32R71,ABS+PMMA,HB,BK23	1	SA	

ELECTRONIC SERVICE
TIRGOVISTE

5-5 LE40R73BD Exploded View

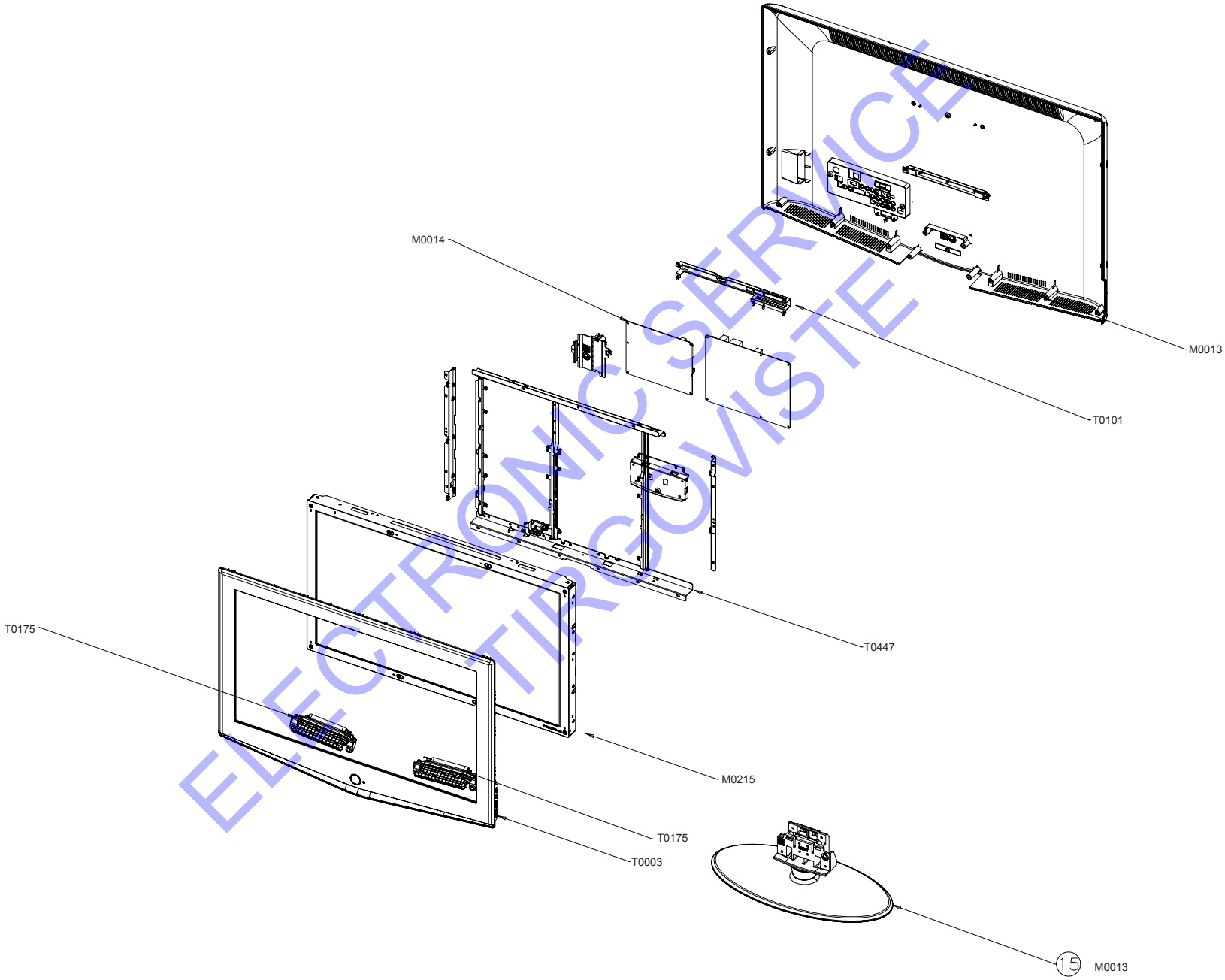

ELECTRONIC SERVICE TIRGOVISTE

5-6 LE40R73BD Parts list

Location	Code.No	Item & Specification	Q'ty	SA/SNA	Remark
T0003	BN96-03011E	ASSY COVER P-FRONT;40R73,EO,ABS+PMMA,HB,	1	SA	
T0175	BN96-03002A	ASSY SPEAKER P;8ohm,Bordeuax 32"/37"/40"	1	SA	
T0175	BN96-03003A	ASSY SPEAKER P;8ohm,Bordeuax 32"/37"/40"	1	SA	
M0215	BN07-00264A	LCD-PANEL;LTA400WT-L01,8bit,952*551*51.0	1	SA	
T0447	BN96-03442B	ASSY BRACKET P-PANEL;CAMBRIDGE40,SECC,AM	1	SNA	
M0014	BN94-01001B	ASSY PCB MAIN-AMZ;LE32R74BDX/*	1	SA	
T0101	BN61-02427A	BRACKET-WALL;BORDEAUX 40,SECC,T1.2	1	SNA	
M0013	BN96-03243A	ASSY COVER P-REAR;40R73,EO,ABS+PMMA,HB,B	1	SA	
M0013	BN96-03016A	ASSY STAND P-BASE;40R71,ABS+PMMA,HB,BK23	1	SA	

ELECTRONIC SERVICE
TIRGOVISTE

5-7 LE26R74BD Exploded View

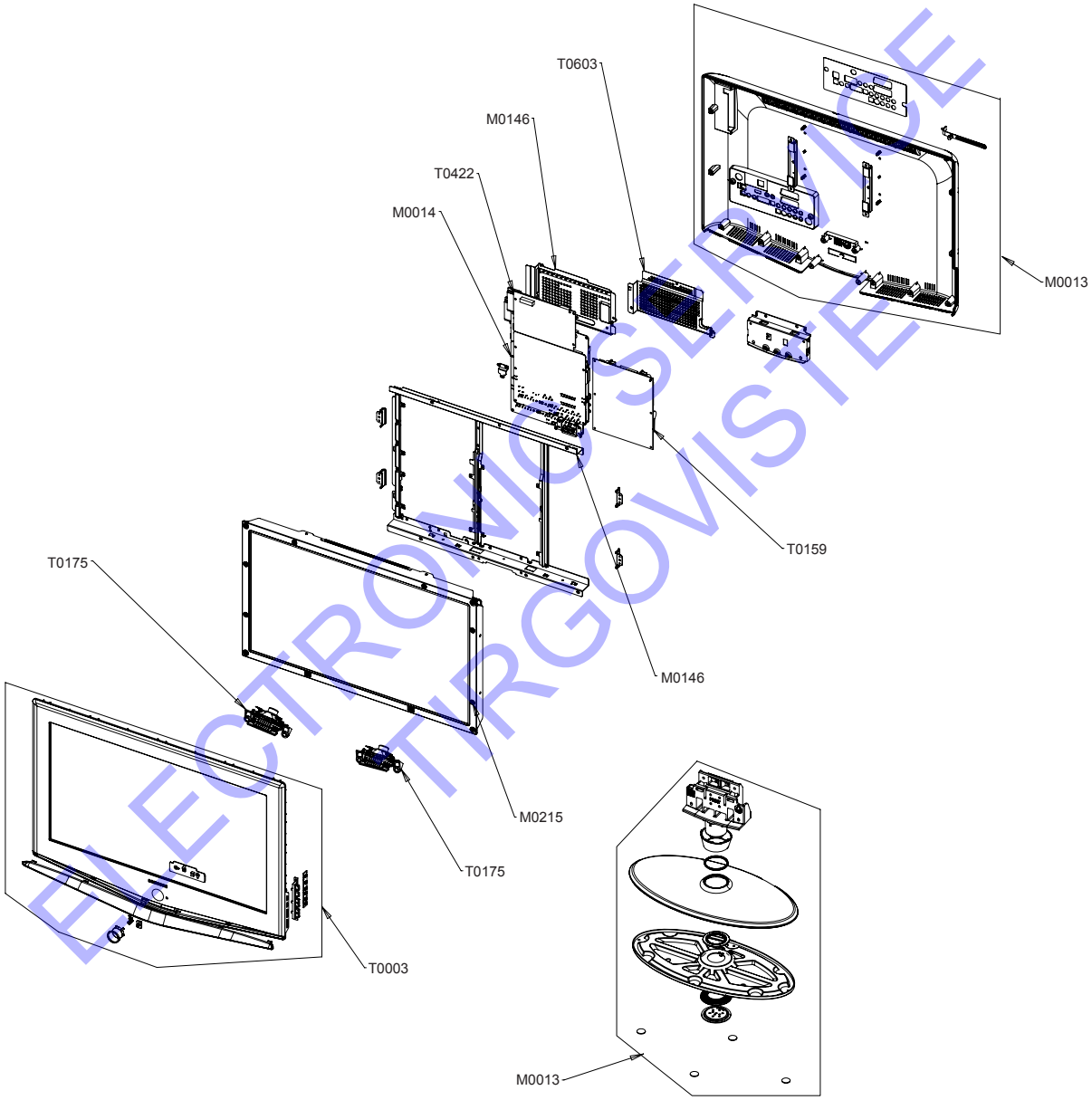

ELECTRONIC SERVICE TIRGOVISTE

5-8 LE26R74BD Parts list

Location	Code.No	Item & Specification	Q'ty	SA/SNA	Remark
T0003	BN96-03260B	ASSY COVER P-FRONT;26R74,EO,ABS+PMMA,HB,	1	SA	
T0175	BN96-03264A	ASSY SPEAKER P;16ohm,Bordeuax2, 26,Left,	1	SA	
T0175	BN96-03265A	ASSY SPEAKER P;16ohm,Bordeuax2, 26,Right	1	SA	
M0215	BN07-00254A	LCD-PANEL;T260XW02,8bit,626.0*373.0*50.0	1	SA	
M0146	BN61-02205B	BRACKET-PANEL TOP;Bordeaux 26,SECC,T1.2	1	SNA	
T0159	BN96-03058A	ASSY PCB P-SMPS;Bordeaux 26 PFC,LE26R71B	1	SA	
M0014	BN94-00866A	ASSY PCB MAIN;LE26R73BDX/XEU,CAMBRIDGE	1	SA	
T0422	BN94-00887B	ASSY PCB MISC-DTV MODULE;LE26R73BD/LE26R	1	SNA	
M0146	BN63-02460A	SHIELD CASE;CAMBRIDGE 26,SECC,T0.8,ITALY	1	SA	
T0603	BN63-02458A	SHIELD-PCB MAIN;CAMBRIDGE 32,SECC,T0.5,U	1	SA	
M0013	BN96-03245A	ASSY COVER P-REAR;26R73,EO,ABS+PMMA,HB,B	1	SA	
M0013	BN96-03017A	ASSY STAND P-BASE;26R71,ABS+PMMA,HB,BK23	1	SA	

ELECTRONIC SERVICE
TIRGOVISTE

5-9 LE32R74BD Exploded View

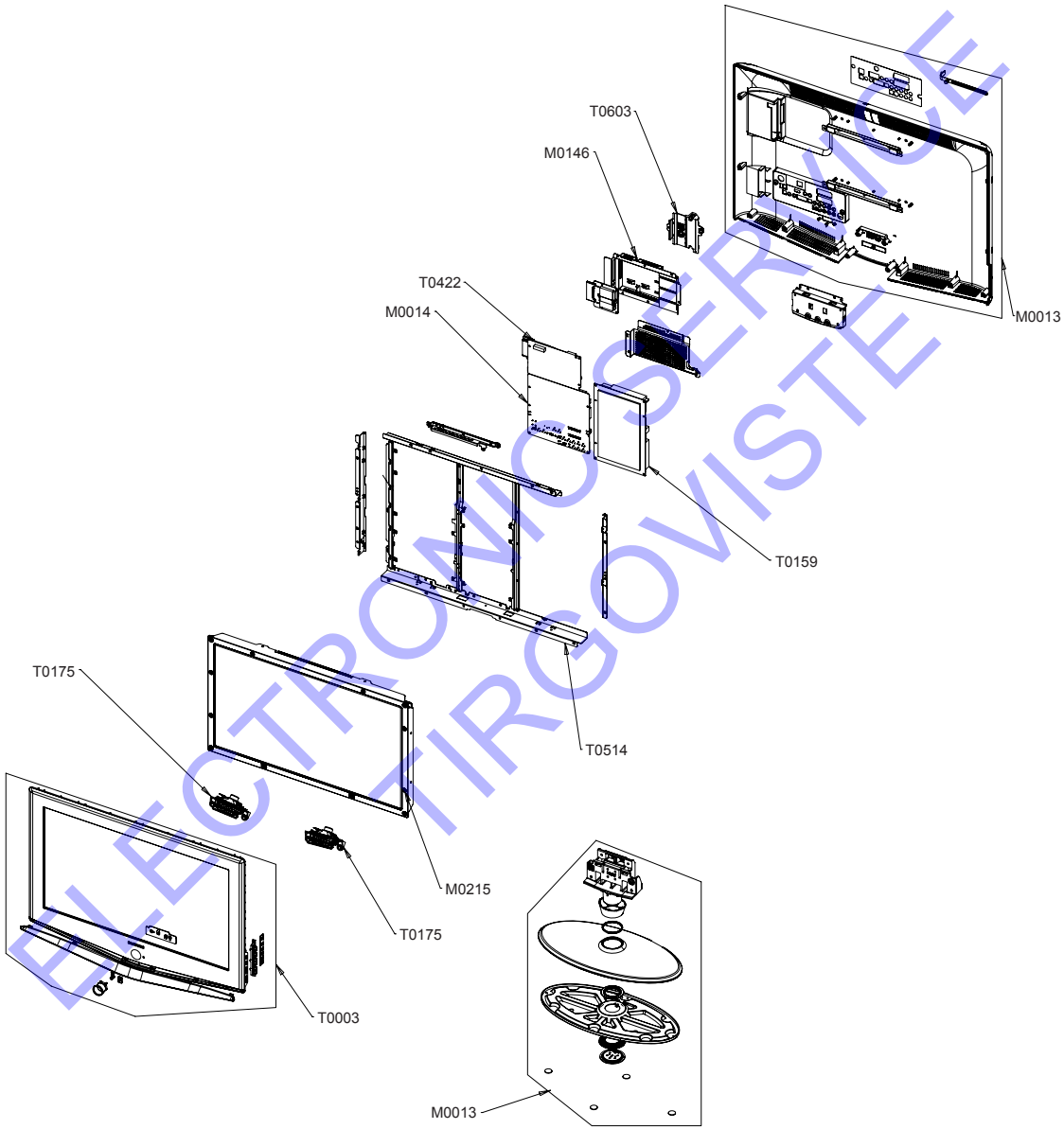

ELECTRONICSERVICE TIRGOVISTE

5-10 LE32R74BD Parts list

Location	Code.No	Item & Specification	Q'ty	SA/SNA	Remark
T0003	BN96-03259B	ASSY COVER P-FRONT;32R74,EO,ABS+PMMA,HB,	1	SA	
T0175	BN96-03266A	ASSY SPEAKER P;8ohm,Bordeuax2, 32,Left,1	1	SA	
T0175	BN96-03267A	ASSY SPEAKER P;8ohm,Bordeuax2, 32,Right,	1	SA	
M0215	BN07-00247A	LCD-PANEL;LTA320WT-L14,-,8BIT,760*450*50	1	SA	
T0514	BN61-02393A	BRACKET-SUPPORT;CAMBRIDGE 32,SECC,T1.2	1	SA	
T0159	BN96-03057A	ASSY PCB P-SMPS;Bordeaux 32 PFC,LE32R71B	1	SA	
M0014	BN94-00865A	ASSY PCB MAIN;LE32R73BDX/XEU,CAMBRIDGE	1	SA	
T0422	BN94-00887A	ASSY PCB MISC-DTV MODULE;DTV MODULE,XEF	1	SNA	
M0146	BN63-02462A	SHIELD CASE;CAMBRIDGE 32,SECC,T0.8,UK	1	SA	
T0603	BN63-02458A	SHIELD-PCB MAIN;CAMBRIDGE 32,SECC,T0.5,U	1	SA	
M0013	BN96-03244A	ASSY COVER P-REAR;32R73,EO,ABS+PMMA,HB,B	1	SA	
M0013	BN96-02998A	ASSY STAND P-BASE;32R71,ABS+PMMA,HB,BK23	1	SA	

ELECTRONIC SERVICE
TIRGOVISTE

5-11 LE37R74BD Exploded View

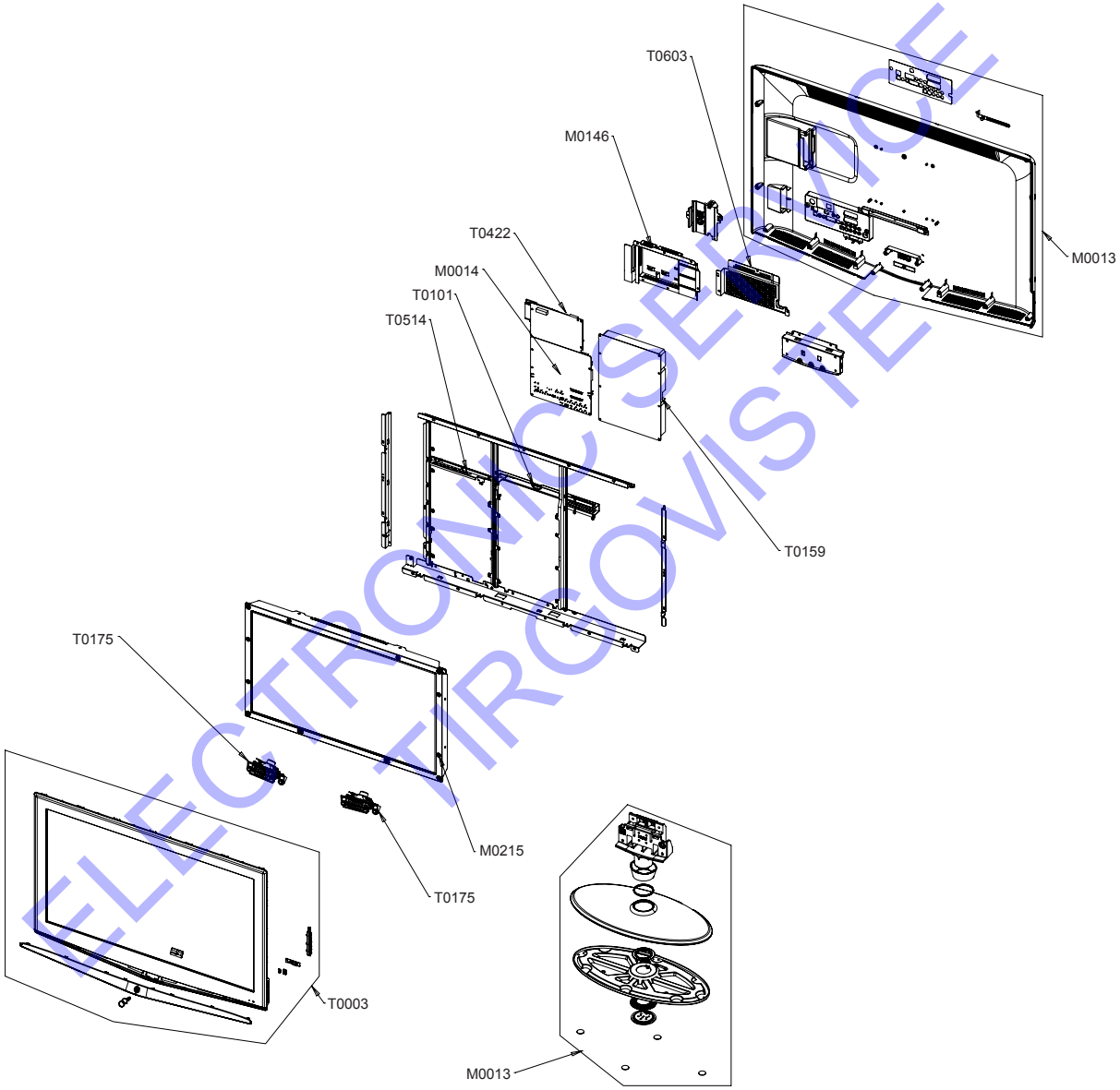

ELECTRONIC SERVICE TIRGOVISTE

5-12 LE37R74BD Parts list

Location	Code.No	Item & Specification	Q'ty	SA/SNA	Remark
T0003	BN96-03254B	ASSY COVER P-FRONT;37R74,EO,ABS+PMMA,HB,	1	SA	
T0175	BN96-03266A	ASSY SPEAKER P;8ohm,Bordeuax2, 32,Left,1	1	SA	
T0175	BN96-03267A	ASSY SPEAKER P;8ohm,Bordeuax2, 32,Right,	1	SA	
M0215	BN07-00255A	LCD-PANEL;T370XW01,8bit,877.0*514.6*54.7	1	SA	
T0514	BN61-02393A	BRACKET-SUPPORT;CAMBRIDGE 32,SECC,T1.2	1	SA	
T0101	BN61-02427A	BRACKET-WALL;BORDEAUX 40,SECC,T1.2	1	SA	
T0159	BN96-03050A	ASSY PCB P-SMPS;Bordeaux 37 PFC,LE37R71B	1	SNA	
M0014	BN94-00865A	ASSY PCB MAIN;LE32R73BDX/XEU,CAMBRIDGE	1	SA	
T0422	BN94-00887A	ASSY PCB MISC-DTV MODULE;DTV MODULE,XEF	1	SNA	
M0146	BN63-02462A	SHIELD CASE;CAMBRIDGE 32,SECC,T0.8,UK	1	SA	
T0603	BN63-02458A	SHIELD-PCB MAIN;CAMBRIDGE 32,SECC,T0.5,U	1	SA	
M0013	BN96-03292A	ASSY COVER P-REAR;37R74,EO,ABS+PMMA,HB,B	1	SA	
M0013	BN96-03016A	ASSY STAND P-BASE;40R71,ABS+PMMA,HB,BK23	1	SA	

ELECTRONIC SERVICE
TIRGOVISTE

5-13 LE40R74BD Exploded View

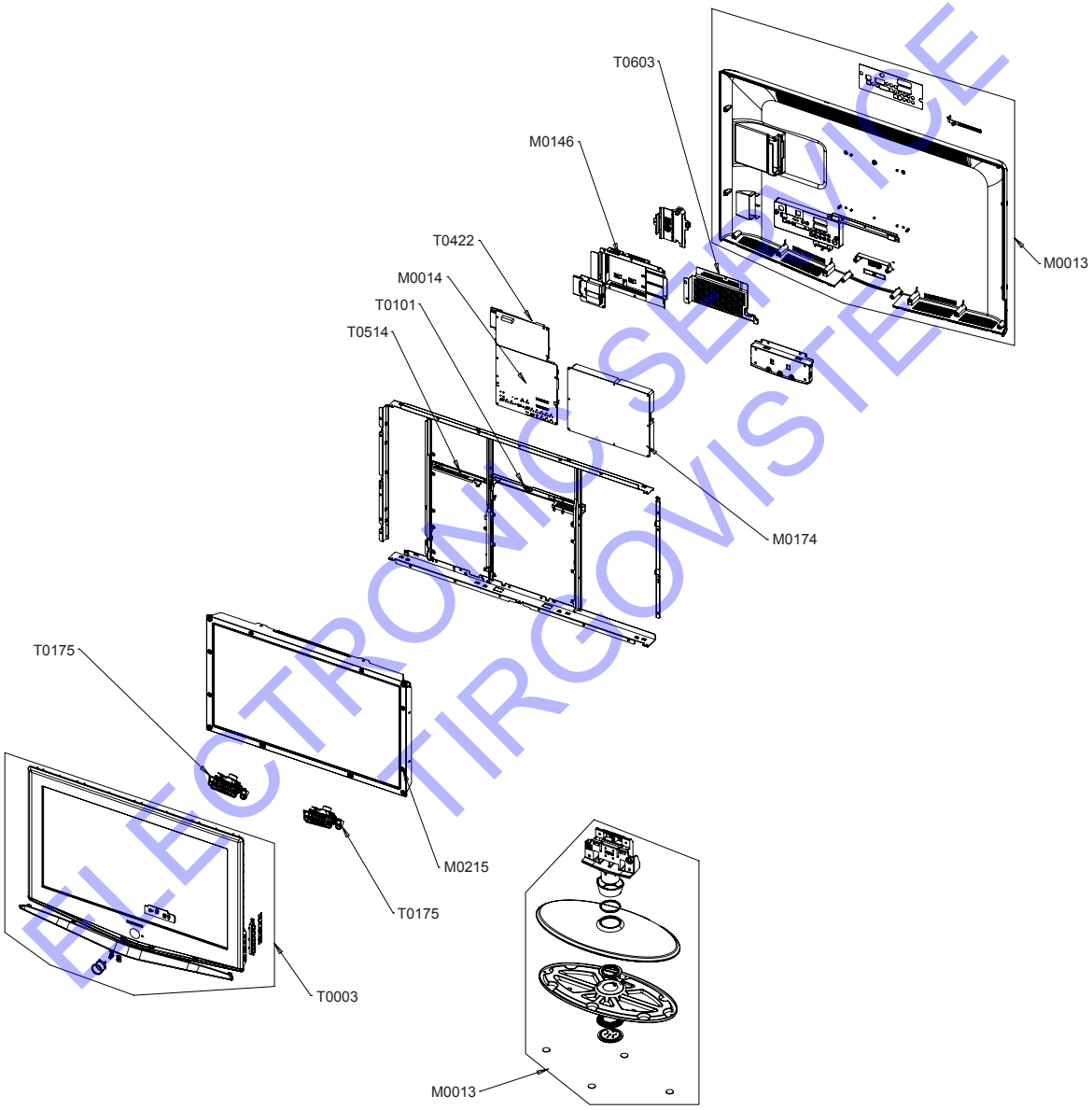

ELECTRONIC SERVICE TIRGOVISTE

5-14 LE40R74BD Parts list

Location	Code.No	Item & Specification	Q'ty	SA/SNA	Remark
T0003	BN96-03258B	ASSY COVER P-FRONT;40R74,EO,ABS+PMMA,HB,	1	SA	
T0175	BN96-03266A	ASSY SPEAKER P;8ohm,Bordeuax2, 32,Left,1	1	SA	
T0175	BN96-03267A	ASSY SPEAKER P;8ohm,Bordeuax2, 32,Right,	1	SA	
M0215	BN07-00264A	LCD-PANEL;LTA400WT-L01,8bit,952*551*51.0	1	SA	
T0514	BN61-02393A	BRACKET-SUPPORT;CAMBRIDGE 32,SECC,T1.2	1	SA	
T0101	BN61-02427A	BRACKET-WALL;BORDEAUX 40,SECC,T1.2	1	SA	
M0174	BN44-00134A	IP BOARD;SIP40,LE40R71B,2.0~3.0mA,6.0~7.	1	SA	
M0014	BN94-00865A	ASSY PCB MAIN;LE32R73BDX/XEU,CAMBRIDGE	1	SA	
T0422	BN94-00887A	ASSY PCB MISC-DTV MODULE;DTV MODULE,XEF	1	SNA	
M0146	BN63-02462A	SHIELD CASE;CAMBRIDGE 32,SECC,T0.8,UK	1	SA	
T0603	BN63-02458A	SHIELD-PCB MAIN;CAMBRIDGE 32,SECC,T0.5,U	1	SA	
M0013	BN96-03243A	ASSY COVER P-REAR;40R73,EO,ABS+PMMA,HB,B	1	SA	
M0013	BN96-03016A	ASSY STAND P-BASE;40R71,ABS+PMMA,HB,BK23	1	SA	

ELECTRONIC SERVICE TIRGOVISTE

6 Electrical Parts List

-You can search for updated part codes through ITSELF web site.
URL : http://itself.sec.samsung.co.kr/

6-1 LE26R73BDX/XEE Parts List

Level	Loc. No.	Code No.	Description & Specification	Q'ty	SA/SNA
0		LE26R73BDX/XE	LE26R73BD,R62D/26R70-GSH,26,LCD-TV,SWEDE	0	
1	M0001	BN90-00844C	ASSY COVER FRONT;26R73,EO,CAMBRIDGE	1	SNA
..2	T0003	BN96-03012C	ASSY COVER P-FRONT;26R73,EO,ABS+PMMA,HB,	1	SA
...3	M0081	6003-001003	SCREW-TAPTITE;BH,+,B,M4,L12,ZPC(BLK),SWR	2	SNA
...3	M0081	6003-001003	SCREW-TAPTITE;BH,+,B,M4,L12,ZPC(BLK),SWR	2	SNA
...3	T0060	BN61-01655A	SPRING ETC;STS-304 SUS,D8,L12,T0.5	1	SA
...3		BN63-02183F	COVER-SHEET;Rhcm,PE Vinyl,T0.05,900mm,20	1.118	SNA
...3	M0112	BN63-02331E	COVER-FRONT;26R73,EO,ABS+PMMA,HB,BK23,S/	1	SNA
...3	T0056	BN63-02333A	COVER-DECORATION;26R71,HIPS,HB,GR503,BLM	1	SNA
...3	T0023	BN64-00342A	KNOB POWER;ROME,40,PC,VIOLET	1	SNA
...3	T0059	BN64-00366A	INDICATOR LED;ROME-I,PC,CLEAR,ALL MODEL	1	SNA
...3	T0054	BN64-00443A	KNOB-DECORATION;32R71,ABS,HB,GR503,VACUU	1	SNA
...3	T0061	BN64-00453A	WINDOW-REMOCON;32R71,PC,V0,VIOLET,DIFFUS	1	SNA
...3		BN96-03404A	ASSY BOARD P-FUNCTION&KNOB;Bordeaux,CT50	1	SNA
....4	T0022	BN64-00442A	KNOB CONTROL;26,32,40R71,PC,BLK,ACRYL CL	1	SNA
....4	M0145	BN96-03045A	ASSY BOARD P-FUNCTION;BORDEAUX,FUNCTION	1	SA
...3	M0146	BN96-03405A	ASSY BOARD P-POWER;BORDEAUX1,CT5000-4140	1	SA
..2	T0175	BN96-03053A	ASSY SPEAKER P;16ohm,Bordeuax 26,Left,5W	1	SA
..2	T0175	BN96-03054A	ASSY SPEAKER P;16ohm,Bordeuax 26,Right,5	1	SA
1	M0216	BN90-00848A	ASSY STAND;26R71,BORDEAUX	1	SNA
..2	M0013	BN96-03017A	ASSY STAND P-BASE;26R71,ABS+PMMA,HB,BK23	1	SA
...3	T0081	6002-001294	SCREW-TAPPING;BH,+,,M4,L16,ZPC(BLK)	4	SA
...3	M0081	6003-001239	SCREW-TAPTITE;FH,+,B,M4,L10,ZPC(YEL),SWR	4	SA
...3		BN61-02192A	GUIDE-STAND;26,32R71,ABS,V0,BLK	1	SNA
...3		BN61-02202A	BRACKET-STAND BOTTOM;BORDEAUX 26,SECC,T2	1	SNA
...3		BN61-02204A	HOLDER-SWIVEL RING;26,32R71,ACETAL,BLK	1	SNA
...3		BN61-02232A	HOLDER-SWIVEL RING;32R71,ACETAL NATUAL,T	1	SNA
...3		BN61-02233A	HOLDER-SWIVEL RING;32R71,ACETAL NATUAL,B	1	SNA
...3		BN61-02236A	BRACKET-HINGE SWIVEL;BORDEAUX 32,SECC,T1	1	SNA
...3		BN63-02322A	COVER-STAND SUB;32R71,ABS+PMMA,HB,BK23,H	1	SNA
...3	T0004	BN63-02335A	COVER-STAND BASE;26R71,ABS+PMMA,HB,BK23,	1	SNA
...3	T0132	BN73-00052A	RUBBER FOOT;ARES 17,SILICON,DIA 17 * T1.	4	SNA
...3		BN63-02183D	COVER-SHEET;Rhcm,PE Vinyl,T0.05,680mm,20	0.4	SNA
...3	T0514	BN61-02367A	BRACKET-SUPPORT;BORDEAUX 32,SECC,T2.0	1	SNA
..2	T0524	6902-000241	BAG PE;NITRON/HDPE,T0.5/T0.012,W600,L600	1	SNA
1	M0002	BN90-00874A	ASSY COVER REAR;26R73,EO,CAMBRIDGE	1	SNA
..2	T0081	6002-001294	SCREW-TAPPING;BH,+,,M4,L16,ZPC(BLK)	2	SA
..2	T0081	6002-001294	SCREW-TAPPING;BH,+,,M4,L16,ZPC(BLK)	13	SA
..2	M0013	BN96-03245A	ASSY COVER P-REAR;26R73,EO,ABS+PMMA,HB,B	1	SA
...3	T0101	BN61-02058A	BRACKET-WALL;23,27,MGM,SECC,T1.6	2	SNA
...3	M0006	BN63-02453A	COVER-REAR;26R73,EO,ABS+PMMA,HB,BK23,H/G	1	SNA
...3	T0071	BN64-00444E	INLAY-TERMINAL;CAMBRIDGE,26,PS SHEET,T0.	1	SNA
...3		BN63-02183F	COVER-SHEET;Rhcm,PE Vinyl,T0.05,900mm,20	0.6	SNA
...3	T0064	BN65-00002A	CLAMPER CORE;BORDEAUX,PP,V0,BLK	1	SNA
1	M0017	BN91-01006D	ASSY CHASSIS;LE26R73BDX/XEE	1	SNA
..2	T0422	BN94-00868B	ASSY PCB MISC-DTV MODULE;LE26R73BD/LE26R	1	SNA
...3	T0245	0202-001522	SOLDER-WIRE FLUX;LFA3-107,-,D1.2,96.5Sn/	0.003	SNA
...3	CN902	3703-001124	CONNECTOR-BACK PANEL;32P,2R,MALE,ANGLE,A	1	SA
...3	CN902	3703-001124	CONNECTOR-BACK PANEL;32P,2R,MALE,ANGLE,A	1	SA
...3	DJ301	3709-001346	CONNECTOR-CARD SLOT;68P,0.27mm,ANGLE,AU1	1	SA

ELECTRONIC SERVICE TIRGOVISTE

Level	Loc. No.	Code No.	Description & Specification	Q'ty	SA/SNA
...3	DJ402	3722-001055	JACK-PHONE;5P/2C,AG,BLK,ANGLE	1	SA
...3	T0510	BN97-00842A	ASSY SMD-MAIN;DTV MODULE,XEE	1	SNA
....4	CIS05	0202-001477	SOLDER-CREAM;LST309-M,-,D20~45§-,96.5Sn/	0.465	SNA
....4	DQ701	0501-000434	TR-SMALL SIGNAL;KTC3875S-GR,NPN,150mW,SO	1	SA
....4	DQ401	0501-000669	TR-SMALL SIGNAL;KTA1505Y,PNP,150mW,SOT-2	1	SA
....4	DQ402	0501-000669	TR-SMALL SIGNAL;KTA1505Y,PNP,150mW,SOT-2	1	SA
....4	DQ703	0501-000669	TR-SMALL SIGNAL;KTA1505Y,PNP,150mW,SOT-2	1	SA
....4	DQ704	0501-000669	TR-SMALL SIGNAL;KTA1505Y,PNP,150mW,SOT-2	1	SA
....4	IC104	0801-002095	IC-CMOS LOGIC;74LCX245,TRANSCEIVER,TSSOP	1	SA
....4	IC104	0801-002237	IC-CMOS LOGIC;74V(A)HC1G04,INVERTER,SC70	1	SA
....4	IC104	0801-002394	IC-CMOS LOGIC;74LCX32,OR GATE,SOIC,14P,1	1	SA
....4	IC104	0801-002407	IC-CMOS LOGIC;74LCX08,AND GATE,SOIC,14P,	1	SA
....4	IC104	0801-002683	IC-CMOS LOGIC;74HCT245,TRANSCEIVER,TSSOP	1	SA
....4	IC104	0801-002709	IC-CMOS LOGIC;74HC373,D FLIP-FLOP,TSSOP,	1	SA
....4	IC104	0801-002709	IC-CMOS LOGIC;74HC373,D FLIP-FLOP,TSSOP,	1	SA
....4	IC107	1002-001227	IC-D/A CONVERTER;CS4340-KSR,24BIT,SOP,16	1	SA
....4	DU402	1006-001165	IC-LINE TRANSCEIVER;MAX3243CDBR,SSOP,28P	1	SA
....4	IC113	1105-001305	IC-DRAM;4S641632,-,64MBIT,1MX16X4BIT,TSO	1	SA
....4	IC113	1105-001308	IC-DRAM;K4S281632,128Mbit,8Mx16,TSOP,54P	1	SA
....4	DU701	1203-001824	IC-VOL. DETECTOR;7042,SOT-89,3P,-,PLASTI	1	SA
....4	T0087	1203-002842	IC-POSI.FIXED REG.;AP1117D-33A,TO-252,3P	1	SA
....4	DU101	1204-002400	IC-DECODER;STI5517SUA,PBGA,416P,27x27mm,	1	SA
....4	DR155	2007-000052	R-CHIP;10Kohm,1%,1/10W,TP,1608	1	SA
....4	DR156	2007-000052	R-CHIP;10Kohm,1%,1/10W,TP,1608	1	SA
....4	DR140	2007-000070	R-CHIP;0ohm,5%,1/10W,TP,1608	1	SA
....4	DR154	2007-000070	R-CHIP;0ohm,5%,1/10W,TP,1608	1	SA
....4	DR158	2007-000070	R-CHIP;0ohm,5%,1/10W,TP,1608	1	SA
....4	DR159	2007-000070	R-CHIP;0ohm,5%,1/10W,TP,1608	1	SA
....4	DR811	2007-000070	R-CHIP;0ohm,5%,1/10W,TP,1608	1	SA
....4	DR812	2007-000070	R-CHIP;0ohm,5%,1/10W,TP,1608	1	SA
....4	DR907	2007-000070	R-CHIP;0ohm,5%,1/10W,TP,1608	1	SA
....4	OR112	2007-000070	R-CHIP;0ohm,5%,1/10W,TP,1608	1	SA
....4	OR113	2007-000070	R-CHIP;0ohm,5%,1/10W,TP,1608	1	SA
....4	DR1102	2007-000072	R-CHIP;47ohm,5%,1/10W,TP,1608	1	SA
....4	DR111	2007-000072	R-CHIP;47ohm,5%,1/10W,TP,1608	1	SA
....4	DR116	2007-000072	R-CHIP;47ohm,5%,1/10W,TP,1608	1	SA
....4	DR169	2007-000072	R-CHIP;47ohm,5%,1/10W,TP,1608	1	SA
....4	DR170	2007-000072	R-CHIP;47ohm,5%,1/10W,TP,1608	1	SA
....4	DR174	2007-000072	R-CHIP;47ohm,5%,1/10W,TP,1608	1	SA
....4	DR176	2007-000072	R-CHIP;47ohm,5%,1/10W,TP,1608	1	SA
....4	DR182	2007-000072	R-CHIP;47ohm,5%,1/10W,TP,1608	1	SA
....4	DR183	2007-000072	R-CHIP;47ohm,5%,1/10W,TP,1608	1	SA
....4	DR184	2007-000072	R-CHIP;47ohm,5%,1/10W,TP,1608	1	SA
....4	DR185	2007-000072	R-CHIP;47ohm,5%,1/10W,TP,1608	1	SA
....4	DR186	2007-000072	R-CHIP;47ohm,5%,1/10W,TP,1608	1	SA
....4	DR187	2007-000072	R-CHIP;47ohm,5%,1/10W,TP,1608	1	SA
....4	DR195	2007-000072	R-CHIP;47ohm,5%,1/10W,TP,1608	1	SA
....4	DR196	2007-000072	R-CHIP;47ohm,5%,1/10W,TP,1608	1	SA
....4	DR197	2007-000072	R-CHIP;47ohm,5%,1/10W,TP,1608	1	SA
....4	DR198	2007-000072	R-CHIP;47ohm,5%,1/10W,TP,1608	1	SA
....4	DR199	2007-000072	R-CHIP;47ohm,5%,1/10W,TP,1608	1	SA
....4	DR202	2007-000072	R-CHIP;47ohm,5%,1/10W,TP,1608	1	SA
....4	DR203	2007-000072	R-CHIP;47ohm,5%,1/10W,TP,1608	1	SA
....4	DR204	2007-000072	R-CHIP;47ohm,5%,1/10W,TP,1608	1	SA
....4	DR501	2007-000072	R-CHIP;47ohm,5%,1/10W,TP,1608	1	SA
....4	DR902	2007-000072	R-CHIP;47ohm,5%,1/10W,TP,1608	1	SA
....4	DR905	2007-000072	R-CHIP;47ohm,5%,1/10W,TP,1608	1	SA
....4	DR906	2007-000072	R-CHIP;47ohm,5%,1/10W,TP,1608	1	SA
....4	DR916	2007-000072	R-CHIP;47ohm,5%,1/10W,TP,1608	1	SA
....4	DR917	2007-000072	R-CHIP;47ohm,5%,1/10W,TP,1608	1	SA

ELECTRONIC SERVICE TIRGOVISTE

Level	Loc. No.	Code No.	Description & Specification	Q'ty	SA/SNA
....4	DR923	2007-000072	R-CHIP;47ohm,5%,1/10W,TP,1608	1	SA
....4	DR104	2007-000074	R-CHIP;100ohm,5%,1/10W,TP,1608	1	SA
....4	DR105	2007-000074	R-CHIP;100ohm,5%,1/10W,TP,1608	1	SA
....4	DR1101	2007-000074	R-CHIP;100ohm,5%,1/10W,TP,1608	1	SA
....4	DR112	2007-000074	R-CHIP;100ohm,5%,1/10W,TP,1608	1	SA
....4	DR113	2007-000074	R-CHIP;100ohm,5%,1/10W,TP,1608	1	SA
....4	DR118	2007-000074	R-CHIP;100ohm,5%,1/10W,TP,1608	1	SA
....4	DR119	2007-000074	R-CHIP;100ohm,5%,1/10W,TP,1608	1	SA
....4	DR120	2007-000074	R-CHIP;100ohm,5%,1/10W,TP,1608	1	SA
....4	DR121	2007-000074	R-CHIP;100ohm,5%,1/10W,TP,1608	1	SA
....4	DR122	2007-000074	R-CHIP;100ohm,5%,1/10W,TP,1608	1	SA
....4	DR123	2007-000074	R-CHIP;100ohm,5%,1/10W,TP,1608	1	SA
....4	DR124	2007-000074	R-CHIP;100ohm,5%,1/10W,TP,1608	1	SA
....4	DR125	2007-000074	R-CHIP;100ohm,5%,1/10W,TP,1608	1	SA
....4	DR126	2007-000074	R-CHIP;100ohm,5%,1/10W,TP,1608	1	SA
....4	DR127	2007-000074	R-CHIP;100ohm,5%,1/10W,TP,1608	1	SA
....4	DR128	2007-000074	R-CHIP;100ohm,5%,1/10W,TP,1608	1	SA
....4	DR129	2007-000074	R-CHIP;100ohm,5%,1/10W,TP,1608	1	SA
....4	DR130	2007-000074	R-CHIP;100ohm,5%,1/10W,TP,1608	1	SA
....4	DR131	2007-000074	R-CHIP;100ohm,5%,1/10W,TP,1608	1	SA
....4	DR137	2007-000074	R-CHIP;100ohm,5%,1/10W,TP,1608	1	SA
....4	DR138	2007-000074	R-CHIP;100ohm,5%,1/10W,TP,1608	1	SA
....4	DR145	2007-000074	R-CHIP;100ohm,5%,1/10W,TP,1608	1	SA
....4	DR146	2007-000074	R-CHIP;100ohm,5%,1/10W,TP,1608	1	SA
....4	DR147	2007-000074	R-CHIP;100ohm,5%,1/10W,TP,1608	1	SA
....4	DR148	2007-000074	R-CHIP;100ohm,5%,1/10W,TP,1608	1	SA
....4	DR149	2007-000074	R-CHIP;100ohm,5%,1/10W,TP,1608	1	SA
....4	DR150	2007-000074	R-CHIP;100ohm,5%,1/10W,TP,1608	1	SA
....4	DR151	2007-000074	R-CHIP;100ohm,5%,1/10W,TP,1608	1	SA
....4	DR152	2007-000074	R-CHIP;100ohm,5%,1/10W,TP,1608	1	SA
....4	DR160	2007-000074	R-CHIP;100ohm,5%,1/10W,TP,1608	1	SA
....4	DR161	2007-000074	R-CHIP;100ohm,5%,1/10W,TP,1608	1	SA
....4	DR166	2007-000074	R-CHIP;100ohm,5%,1/10W,TP,1608	1	SA
....4	DR171	2007-000074	R-CHIP;100ohm,5%,1/10W,TP,1608	1	SA
....4	DR172	2007-000074	R-CHIP;100ohm,5%,1/10W,TP,1608	1	SA
....4	DR175	2007-000074	R-CHIP;100ohm,5%,1/10W,TP,1608	1	SA
....4	DR180	2007-000074	R-CHIP;100ohm,5%,1/10W,TP,1608	1	SA
....4	DR181	2007-000074	R-CHIP;100ohm,5%,1/10W,TP,1608	1	SA
....4	DR200	2007-000074	R-CHIP;100ohm,5%,1/10W,TP,1608	1	SA
....4	DR201	2007-000074	R-CHIP;100ohm,5%,1/10W,TP,1608	1	SA
....4	DR221	2007-000074	R-CHIP;100ohm,5%,1/10W,TP,1608	1	SA
....4	DR400	2007-000074	R-CHIP;100ohm,5%,1/10W,TP,1608	1	SA
....4	DR401	2007-000074	R-CHIP;100ohm,5%,1/10W,TP,1608	1	SA
....4	DR402	2007-000074	R-CHIP;100ohm,5%,1/10W,TP,1608	1	SA
....4	DR403	2007-000074	R-CHIP;100ohm,5%,1/10W,TP,1608	1	SA
....4	DR404	2007-000074	R-CHIP;100ohm,5%,1/10W,TP,1608	1	SA
....4	DR405	2007-000074	R-CHIP;100ohm,5%,1/10W,TP,1608	1	SA
....4	DR406	2007-000074	R-CHIP;100ohm,5%,1/10W,TP,1608	1	SA
....4	DR407	2007-000074	R-CHIP;100ohm,5%,1/10W,TP,1608	1	SA
....4	DR419	2007-000074	R-CHIP;100ohm,5%,1/10W,TP,1608	1	SA
....4	DR704	2007-000074	R-CHIP;100ohm,5%,1/10W,TP,1608	1	SA
....4	DR162	2007-000076	R-CHIP;330ohm,5%,1/10W,TP,1608	1	SA
....4	DR163	2007-000076	R-CHIP;330ohm,5%,1/10W,TP,1608	1	SA
....4	DR164	2007-000076	R-CHIP;330ohm,5%,1/10W,TP,1608	1	SA
....4	DR165	2007-000076	R-CHIP;330ohm,5%,1/10W,TP,1608	1	SA
....4	DR502	2007-000078	R-CHIP;1Kohm,5%,1/10W,TP,1608	1	SA
....4	DR503	2007-000078	R-CHIP;1Kohm,5%,1/10W,TP,1608	1	SA
....4	DR505	2007-000078	R-CHIP;1Kohm,5%,1/10W,TP,1608	1	SA
....4	DR702	2007-000078	R-CHIP;1Kohm,5%,1/10W,TP,1608	1	SA
....4	DR114	2007-000084	R-CHIP;4.7Kohm,5%,1/10W,TP,1608	1	SA

ELECTRONIC SERVICE TIRGOVISTE

Level	Loc. No.	Code No.	Description & Specification	Q'ty	SA/SNA
....4	DR139	2007-000084	R-CHIP;4.7Kohm,5%,1/10W,TP,1608	1	SA
....4	DR141	2007-000084	R-CHIP;4.7Kohm,5%,1/10W,TP,1608	1	SA
....4	DR142	2007-000084	R-CHIP;4.7Kohm,5%,1/10W,TP,1608	1	SA
....4	DR143	2007-000084	R-CHIP;4.7Kohm,5%,1/10W,TP,1608	1	SA
....4	DR144	2007-000084	R-CHIP;4.7Kohm,5%,1/10W,TP,1608	1	SA
....4	DR153	2007-000084	R-CHIP;4.7Kohm,5%,1/10W,TP,1608	1	SA
....4	DR417	2007-000084	R-CHIP;4.7Kohm,5%,1/10W,TP,1608	1	SA
....4	DR418	2007-000084	R-CHIP;4.7Kohm,5%,1/10W,TP,1608	1	SA
....4	DR701	2007-000084	R-CHIP;4.7Kohm,5%,1/10W,TP,1608	1	SA
....4	DR703	2007-000084	R-CHIP;4.7Kohm,5%,1/10W,TP,1608	1	SA
....4	DR705	2007-000084	R-CHIP;4.7Kohm,5%,1/10W,TP,1608	1	SA
....4	DR707	2007-000084	R-CHIP;4.7Kohm,5%,1/10W,TP,1608	1	SA
....4	DR117	2007-000090	R-CHIP;10Kohm,5%,1/10W,TP,1608	1	SA
....4	DR177	2007-000090	R-CHIP;10Kohm,5%,1/10W,TP,1608	1	SA
....4	DR178	2007-000090	R-CHIP;10Kohm,5%,1/10W,TP,1608	1	SA
....4	DR179	2007-000090	R-CHIP;10Kohm,5%,1/10W,TP,1608	1	SA
....4	DR188	2007-000090	R-CHIP;10Kohm,5%,1/10W,TP,1608	1	SA
....4	DR189	2007-000090	R-CHIP;10Kohm,5%,1/10W,TP,1608	1	SA
....4	DR190	2007-000090	R-CHIP;10Kohm,5%,1/10W,TP,1608	1	SA
....4	DR191	2007-000090	R-CHIP;10Kohm,5%,1/10W,TP,1608	1	SA
....4	DR192	2007-000090	R-CHIP;10Kohm,5%,1/10W,TP,1608	1	SA
....4	DR193	2007-000090	R-CHIP;10Kohm,5%,1/10W,TP,1608	1	SA
....4	DR194	2007-000090	R-CHIP;10Kohm,5%,1/10W,TP,1608	1	SA
....4	DR416	2007-000090	R-CHIP;10Kohm,5%,1/10W,TP,1608	1	SA
....4	DR423	2007-000090	R-CHIP;10Kohm,5%,1/10W,TP,1608	1	SA
....4	DR424	2007-000090	R-CHIP;10Kohm,5%,1/10W,TP,1608	1	SA
....4	DR632	2007-000090	R-CHIP;10Kohm,5%,1/10W,TP,1608	1	SA
....4	DR633	2007-000090	R-CHIP;10Kohm,5%,1/10W,TP,1608	1	SA
....4	DR901	2007-000090	R-CHIP;10Kohm,5%,1/10W,TP,1608	1	SA
....4	DR903	2007-000090	R-CHIP;10Kohm,5%,1/10W,TP,1608	1	SA
....4	DR904	2007-000090	R-CHIP;10Kohm,5%,1/10W,TP,1608	1	SA
....4	DR918	2007-000090	R-CHIP;10Kohm,5%,1/10W,TP,1608	1	SA
....4	DR919	2007-000090	R-CHIP;10Kohm,5%,1/10W,TP,1608	1	SA
....4	DR920	2007-000090	R-CHIP;10Kohm,5%,1/10W,TP,1608	1	SA
....4	DR921	2007-000090	R-CHIP;10Kohm,5%,1/10W,TP,1608	1	SA
....4	DR922	2007-000090	R-CHIP;10Kohm,5%,1/10W,TP,1608	1	SA
....4	DR700	2007-000097	R-CHIP;47Kohm,5%,1/10W,TP,1608	1	SA
....4	DR706	2007-000097	R-CHIP;47Kohm,5%,1/10W,TP,1608	1	SA
....4	DR102	2007-000102	R-CHIP;100Kohm,5%,1/10W,TP,1608	1	SA
....4	DR408	2007-000113	R-CHIP;33ohm,5%,1/10W,TP,1608	1	SA
....4	DR409	2007-000113	R-CHIP;33ohm,5%,1/10W,TP,1608	1	SA
....4	DR410	2007-000113	R-CHIP;33ohm,5%,1/10W,TP,1608	1	SA
....4	DR411	2007-000113	R-CHIP;33ohm,5%,1/10W,TP,1608	1	SA
....4	DR412	2007-000113	R-CHIP;33ohm,5%,1/10W,TP,1608	1	SA
....4	DR413	2007-000113	R-CHIP;33ohm,5%,1/10W,TP,1608	1	SA
....4	DR414	2007-000113	R-CHIP;33ohm,5%,1/10W,TP,1608	1	SA
....4	DR415	2007-000113	R-CHIP;33ohm,5%,1/10W,TP,1608	1	SA
....4	DR601	2007-000113	R-CHIP;33ohm,5%,1/10W,TP,1608	1	SA
....4	DR908	2007-000113	R-CHIP;33ohm,5%,1/10W,TP,1608	1	SA
....4	DR909	2007-000113	R-CHIP;33ohm,5%,1/10W,TP,1608	1	SA
....4	DR910	2007-000113	R-CHIP;33ohm,5%,1/10W,TP,1608	1	SA
....4	DR911	2007-000113	R-CHIP;33ohm,5%,1/10W,TP,1608	1	SA
....4	DR912	2007-000113	R-CHIP;33ohm,5%,1/10W,TP,1608	1	SA
....4	DR913	2007-000113	R-CHIP;33ohm,5%,1/10W,TP,1608	1	SA
....4	DR914	2007-000113	R-CHIP;33ohm,5%,1/10W,TP,1608	1	SA
....4	DR915	2007-000113	R-CHIP;33ohm,5%,1/10W,TP,1608	1	SA
....4	DR999	2007-000113	R-CHIP;33ohm,5%,1/10W,TP,1608	1	SA
....4	DR101	2007-000119	R-CHIP;560ohm,5%,1/10W,TP,1608	1	SA
....4	DR173	2007-000372	R-CHIP;130ohm,5%,1/10W,TP,1608	1	SA
....4	DR205	2007-000372	R-CHIP;130ohm,5%,1/10W,TP,1608	1	SA

ELECTRONIC SERVICE TIRGOVISTE

Level	Loc. No.	Code No.	Description & Specification	Q'ty	SA/SNA
....4	DR132	2007-000539	R-CHIP;200ohm,5%,1/10W,TP,1608	1	SA
....4	DR133	2007-000539	R-CHIP;200ohm,5%,1/10W,TP,1608	1	SA
....4	DR134	2007-000539	R-CHIP;200ohm,5%,1/10W,TP,1608	1	SA
....4	DR135	2007-000539	R-CHIP;200ohm,5%,1/10W,TP,1608	1	SA
....4	DR167	2007-000539	R-CHIP;200ohm,5%,1/10W,TP,1608	1	SA
....4	DR800	2007-000763	R-CHIP;330ohm,1%,1/10W,TP,1608	1	SA
....4	DR801	2007-000763	R-CHIP;330ohm,1%,1/10W,TP,1608	1	SA
....4	DR802	2007-000763	R-CHIP;330ohm,1%,1/10W,TP,1608	1	SA
....4	DR803	2007-000763	R-CHIP;330ohm,1%,1/10W,TP,1608	1	SA
....4	DR804	2007-000763	R-CHIP;330ohm,1%,1/10W,TP,1608	1	SA
....4	DR805	2007-000763	R-CHIP;330ohm,1%,1/10W,TP,1608	1	SA
....4	DR806	2007-000763	R-CHIP;330ohm,1%,1/10W,TP,1608	1	SA
....4	DR807	2007-000763	R-CHIP;330ohm,1%,1/10W,TP,1608	1	SA
....4	DR420	2007-001167	R-CHIP;75ohm,5%,1/10W,TP,1608	1	SA
....4	DR421	2007-001167	R-CHIP;75ohm,5%,1/10W,TP,1608	1	SA
....4	DRA103	2011-001011	R-NET;10Kohm,5%,1/16W,L,CHIP,8P,TP,3.2x1	1	SA
....4	DRA401	2011-001011	R-NET;10Kohm,5%,1/16W,L,CHIP,8P,TP,3.2x1	1	SA
....4	DRA108	2011-001410	R-NET;120OHM,5%,1/16W,L,CHIP,8P,TP,3.2X1	1	SA
....4	DRA109	2011-001410	R-NET;120OHM,5%,1/16W,L,CHIP,8P,TP,3.2X1	1	SA
....4	DRA110	2011-001410	R-NET;120OHM,5%,1/16W,L,CHIP,8P,TP,3.2X1	1	SA
....4	DRA111	2011-001410	R-NET;120OHM,5%,1/16W,L,CHIP,8P,TP,3.2X1	1	SA
....4	DRA112	2011-001410	R-NET;120OHM,5%,1/16W,L,CHIP,8P,TP,3.2X1	1	SA
....4	DRA113	2011-001410	R-NET;120OHM,5%,1/16W,L,CHIP,8P,TP,3.2X1	1	SA
....4	DRA114	2011-001410	R-NET;120OHM,5%,1/16W,L,CHIP,8P,TP,3.2X1	1	SA
....4	DRA115	2011-001410	R-NET;120OHM,5%,1/16W,L,CHIP,8P,TP,3.2X1	1	SA
....4	DRA116	2011-001410	R-NET;120OHM,5%,1/16W,L,CHIP,8P,TP,3.2X1	1	SA
....4	DRA117	2011-001410	R-NET;120OHM,5%,1/16W,L,CHIP,8P,TP,3.2X1	1	SA
....4	DRA118	2011-001410	R-NET;120OHM,5%,1/16W,L,CHIP,8P,TP,3.2X1	1	SA
....4	DRA119	2011-001410	R-NET;120OHM,5%,1/16W,L,CHIP,8P,TP,3.2X1	1	SA
....4	DRA120	2011-001410	R-NET;120OHM,5%,1/16W,L,CHIP,8P,TP,3.2X1	1	SA
....4	DRA121	2011-001410	R-NET;120OHM,5%,1/16W,L,CHIP,8P,TP,3.2X1	1	SA
....4	DRA122	2011-001410	R-NET;120OHM,5%,1/16W,L,CHIP,8P,TP,3.2X1	1	SA
....4	DRA123	2011-001410	R-NET;120OHM,5%,1/16W,L,CHIP,8P,TP,3.2X1	1	SA
....4	DRA124	2011-001410	R-NET;120OHM,5%,1/16W,L,CHIP,8P,TP,3.2X1	1	SA
....4	DRA125	2011-001410	R-NET;120OHM,5%,1/16W,L,CHIP,8P,TP,3.2X1	1	SA
....4	DC100	2203-000257	C-CER,CHIP;10nF,10%,50V,X7R,1608	1	SA
....4	DC102	2203-000257	C-CER,CHIP;10nF,10%,50V,X7R,1608	1	SA
....4	DC105	2203-000257	C-CER,CHIP;10nF,10%,50V,X7R,1608	1	SA
....4	DC107	2203-000257	C-CER,CHIP;10nF,10%,50V,X7R,1608	1	SA
....4	DC109	2203-000257	C-CER,CHIP;10nF,10%,50V,X7R,1608	1	SA
....4	DC111	2203-000257	C-CER,CHIP;10nF,10%,50V,X7R,1608	1	SA
....4	DC112	2203-000257	C-CER,CHIP;10nF,10%,50V,X7R,1608	1	SA
....4	DC114	2203-000257	C-CER,CHIP;10nF,10%,50V,X7R,1608	1	SA
....4	DC116	2203-000257	C-CER,CHIP;10nF,10%,50V,X7R,1608	1	SA
....4	DC118	2203-000257	C-CER,CHIP;10nF,10%,50V,X7R,1608	1	SA
....4	DC801	2203-000659	C-CER,CHIP;0.27nF,5%,50V,C0G,1608	1	SA
....4	DC804	2203-000659	C-CER,CHIP;0.27nF,5%,50V,C0G,1608	1	SA
....4	DC807	2203-000659	C-CER,CHIP;0.27nF,5%,50V,C0G,1608	1	SA
....4	DC810	2203-000659	C-CER,CHIP;0.27nF,5%,50V,C0G,1608	1	SA
....4	DC155	2203-001630	C-CER,CHIP;330nF,+80-20%,16V,Y5V,1608	1	SA
....4	DC700	2203-001630	C-CER,CHIP;330nF,+80-20%,16V,Y5V,1608	1	SA
....4	DC701	2203-001630	C-CER,CHIP;330nF,+80-20%,16V,Y5V,1608	1	SA
....4	DC101	2203-005005	C-CER,CHIP;100nF,10%,16V,X7R,1608	1	SA
....4	DC103	2203-005005	C-CER,CHIP;100nF,10%,16V,X7R,1608	1	SA
....4	DC104	2203-005005	C-CER,CHIP;100nF,10%,16V,X7R,1608	1	SA
....4	DC106	2203-005005	C-CER,CHIP;100nF,10%,16V,X7R,1608	1	SA
....4	DC108	2203-005005	C-CER,CHIP;100nF,10%,16V,X7R,1608	1	SA
....4	DC110	2203-005005	C-CER,CHIP;100nF,10%,16V,X7R,1608	1	SA
....4	DC113	2203-005005	C-CER,CHIP;100nF,10%,16V,X7R,1608	1	SA
....4	DC115	2203-005005	C-CER,CHIP;100nF,10%,16V,X7R,1608	1	SA

ELECTRONIC SERVICE TIRGOVISTE

Level	Loc. No.	Code No.	Description & Specification	Q'ty	SA/SNA
....4	DC117	2203-005005	C-CER,CHIP;100nF,10%,16V,X7R,1608	1	SA
....4	DC119	2203-005005	C-CER,CHIP;100nF,10%,16V,X7R,1608	1	SA
....4	DC120	2203-005005	C-CER,CHIP;100nF,10%,16V,X7R,1608	1	SA
....4	DC126	2203-005005	C-CER,CHIP;100nF,10%,16V,X7R,1608	1	SA
....4	DC127	2203-005005	C-CER,CHIP;100nF,10%,16V,X7R,1608	1	SA
....4	DC128	2203-005005	C-CER,CHIP;100nF,10%,16V,X7R,1608	1	SA
....4	DC129	2203-005005	C-CER,CHIP;100nF,10%,16V,X7R,1608	1	SA
....4	DC130	2203-005005	C-CER,CHIP;100nF,10%,16V,X7R,1608	1	SA
....4	DC131	2203-005005	C-CER,CHIP;100nF,10%,16V,X7R,1608	1	SA
....4	DC132	2203-005005	C-CER,CHIP;100nF,10%,16V,X7R,1608	1	SA
....4	DC133	2203-005005	C-CER,CHIP;100nF,10%,16V,X7R,1608	1	SA
....4	DC134	2203-005005	C-CER,CHIP;100nF,10%,16V,X7R,1608	1	SA
....4	DC135	2203-005005	C-CER,CHIP;100nF,10%,16V,X7R,1608	1	SA
....4	DC136	2203-005005	C-CER,CHIP;100nF,10%,16V,X7R,1608	1	SA
....4	DC137	2203-005005	C-CER,CHIP;100nF,10%,16V,X7R,1608	1	SA
....4	DC138	2203-005005	C-CER,CHIP;100nF,10%,16V,X7R,1608	1	SA
....4	DC139	2203-005005	C-CER,CHIP;100nF,10%,16V,X7R,1608	1	SA
....4	DC140	2203-005005	C-CER,CHIP;100nF,10%,16V,X7R,1608	1	SA
....4	DC141	2203-005005	C-CER,CHIP;100nF,10%,16V,X7R,1608	1	SA
....4	DC142	2203-005005	C-CER,CHIP;100nF,10%,16V,X7R,1608	1	SA
....4	DC143	2203-005005	C-CER,CHIP;100nF,10%,16V,X7R,1608	1	SA
....4	DC144	2203-005005	C-CER,CHIP;100nF,10%,16V,X7R,1608	1	SA
....4	DC145	2203-005005	C-CER,CHIP;100nF,10%,16V,X7R,1608	1	SA
....4	DC146	2203-005005	C-CER,CHIP;100nF,10%,16V,X7R,1608	1	SA
....4	DC147	2203-005005	C-CER,CHIP;100nF,10%,16V,X7R,1608	1	SA
....4	DC148	2203-005005	C-CER,CHIP;100nF,10%,16V,X7R,1608	1	SA
....4	DC149	2203-005005	C-CER,CHIP;100nF,10%,16V,X7R,1608	1	SA
....4	DC150	2203-005005	C-CER,CHIP;100nF,10%,16V,X7R,1608	1	SA
....4	DC151	2203-005005	C-CER,CHIP;100nF,10%,16V,X7R,1608	1	SA
....4	DC152	2203-005005	C-CER,CHIP;100nF,10%,16V,X7R,1608	1	SA
....4	DC153	2203-005005	C-CER,CHIP;100nF,10%,16V,X7R,1608	1	SA
....4	DC203	2203-005005	C-CER,CHIP;100nF,10%,16V,X7R,1608	1	SA
....4	DC400	2203-005005	C-CER,CHIP;100nF,10%,16V,X7R,1608	1	SA
....4	DC401	2203-005005	C-CER,CHIP;100nF,10%,16V,X7R,1608	1	SA
....4	DC402	2203-005005	C-CER,CHIP;100nF,10%,16V,X7R,1608	1	SA
....4	DC403	2203-005005	C-CER,CHIP;100nF,10%,16V,X7R,1608	1	SA
....4	DC404	2203-005005	C-CER,CHIP;100nF,10%,16V,X7R,1608	1	SA
....4	DC500	2203-005005	C-CER,CHIP;100nF,10%,16V,X7R,1608	1	SA
....4	DC501	2203-005005	C-CER,CHIP;100nF,10%,16V,X7R,1608	1	SA
....4	DC502	2203-005005	C-CER,CHIP;100nF,10%,16V,X7R,1608	1	SA
....4	DC503	2203-005005	C-CER,CHIP;100nF,10%,16V,X7R,1608	1	SA
....4	DC504	2203-005005	C-CER,CHIP;100nF,10%,16V,X7R,1608	1	SA
....4	DC505	2203-005005	C-CER,CHIP;100nF,10%,16V,X7R,1608	1	SA
....4	DC506	2203-005005	C-CER,CHIP;100nF,10%,16V,X7R,1608	1	SA
....4	DC507	2203-005005	C-CER,CHIP;100nF,10%,16V,X7R,1608	1	SA
....4	DC508	2203-005005	C-CER,CHIP;100nF,10%,16V,X7R,1608	1	SA
....4	DC509	2203-005005	C-CER,CHIP;100nF,10%,16V,X7R,1608	1	SA
....4	DC510	2203-005005	C-CER,CHIP;100nF,10%,16V,X7R,1608	1	SA
....4	DC511	2203-005005	C-CER,CHIP;100nF,10%,16V,X7R,1608	1	SA
....4	DC512	2203-005005	C-CER,CHIP;100nF,10%,16V,X7R,1608	1	SA
....4	DC513	2203-005005	C-CER,CHIP;100nF,10%,16V,X7R,1608	1	SA
....4	DC514	2203-005005	C-CER,CHIP;100nF,10%,16V,X7R,1608	1	SA
....4	DC601	2203-005005	C-CER,CHIP;100nF,10%,16V,X7R,1608	1	SA
....4	DC612	2203-005005	C-CER,CHIP;100nF,10%,16V,X7R,1608	1	SA
....4	DC614	2203-005005	C-CER,CHIP;100nF,10%,16V,X7R,1608	1	SA
....4	DC631	2203-005005	C-CER,CHIP;100nF,10%,16V,X7R,1608	1	SA
....4	DC632	2203-005005	C-CER,CHIP;100nF,10%,16V,X7R,1608	1	SA
....4	DC633	2203-005005	C-CER,CHIP;100nF,10%,16V,X7R,1608	1	SA
....4	DC902	2203-005005	C-CER,CHIP;100nF,10%,16V,X7R,1608	1	SA
....4	DC903	2203-005005	C-CER,CHIP;100nF,10%,16V,X7R,1608	1	SA

ELECTRONIC SERVICE TIRGOVISTE

Level	Loc. No.	Code No.	Description & Specification	Q'ty	SA/SNA
....4	DC905	2203-005005	C-CER,CHIP;100nF,10%,16V,X7R,1608	1	SA
....4	DC906	2203-005005	C-CER,CHIP;100nF,10%,16V,X7R,1608	1	SA
....4	DC907	2203-005005	C-CER,CHIP;100nF,10%,16V,X7R,1608	1	SA
....4	DC909	2203-005005	C-CER,CHIP;100nF,10%,16V,X7R,1608	1	SA
....4	DC910	2203-005005	C-CER,CHIP;100nF,10%,16V,X7R,1608	1	SA
....4	DC915	2203-005005	C-CER,CHIP;100nF,10%,16V,X7R,1608	1	SA
....4	DC916	2203-005005	C-CER,CHIP;100nF,10%,16V,X7R,1608	1	SA
....4	DC921	2203-005005	C-CER,CHIP;100nF,10%,16V,X7R,1608	1	SA
....4	DC922	2203-005005	C-CER,CHIP;100nF,10%,16V,X7R,1608	1	SA
....4	DC9906	2203-005005	C-CER,CHIP;100nF,10%,16V,X7R,1608	1	SA
....4	DC121	2402-000108	C-AL,SMD;10uF,20%,16V,WT,TP,4.3x4.3x5.2m	1	SA
....4	DC122	2402-000108	C-AL,SMD;10uF,20%,16V,WT,TP,4.3x4.3x5.2m	1	SA
....4	DC123	2402-000108	C-AL,SMD;10uF,20%,16V,WT,TP,4.3x4.3x5.2m	1	SA
....4	DC124	2402-000108	C-AL,SMD;10uF,20%,16V,WT,TP,4.3x4.3x5.2m	1	SA
....4	DC125	2402-000108	C-AL,SMD;10uF,20%,16V,WT,TP,4.3x4.3x5.2m	1	SA
....4	DC602	2402-000108	C-AL,SMD;10uF,20%,16V,WT,TP,4.3x4.3x5.2m	1	SA
....4	DC154	2402-001128	C-AL,SMD;100UF,20%,16V,WT,TP,6.3X5.7MM	1	SA
....4	DC522	2402-001128	C-AL,SMD;100UF,20%,16V,WT,TP,6.3X5.7MM	1	SA
....4	DC611	2402-001128	C-AL,SMD;100UF,20%,16V,WT,TP,6.3X5.7MM	1	SA
....4	DC634	2402-001128	C-AL,SMD;100UF,20%,16V,WT,TP,6.3X5.7MM	1	SA
....4	DC901	2402-001128	C-AL,SMD;100UF,20%,16V,WT,TP,6.3X5.7MM	1	SA
....4	DC904	2402-001128	C-AL,SMD;100UF,20%,16V,WT,TP,6.3X5.7MM	1	SA
....4	DC635	2402-001158	C-AL,SMD;1UF,20%,50V,WT,TP,4X5.2MM	1	SA
....4	DC636	2402-001158	C-AL,SMD;1UF,20%,50V,WT,TP,4X5.2MM	1	SA
....4	DC637	2402-001159	C-AL,SMD;3.3UF,20%,50V,WT,TP,4X5.2MM	1	SA
....4	DC638	2402-001159	C-AL,SMD;3.3UF,20%,50V,WT,TP,4X5.2MM	1	SA
....4	DC202	2402-001216	C-AL,SMD;470uF,20%,16V,WT,TP,10.3x10.3x1	1	SA
....4	DC613	2402-001216	C-AL,SMD;470uF,20%,16V,WT,TP,10.3x10.3x1	1	SA
....4	T0052	2703-000125	INDUCTOR-SMD;10uH,10%,2012	1	SA
....4	T0052	2703-000125	INDUCTOR-SMD;10uH,10%,2012	1	SA
....4	T0052	2703-000125	INDUCTOR-SMD;10uH,10%,2012	1	SA
....4	T0052	2703-000125	INDUCTOR-SMD;10uH,10%,2012	1	SA
....4	DX601	2806-001308	OSCILLATOR-VCXO;27MHZ,-,30PF,TP,3.3V,50M	1	SA
....4	T0568	3301-001569	BEAD-SMD;600ohm,2012,1000mA,TP,520ohm/90	1	SNA
....4	T0568	3301-001569	BEAD-SMD;600ohm,2012,1000mA,TP,520ohm/90	1	SNA
....4	T0568	3301-001569	BEAD-SMD;600ohm,2012,1000mA,TP,520ohm/90	1	SNA
....4	T0568	3301-001569	BEAD-SMD;600ohm,2012,1000mA,TP,520ohm/90	1	SNA
....4	T0568	3301-001569	BEAD-SMD;600ohm,2012,1000mA,TP,520ohm/90	1	SNA
....4	T0568	3301-001569	BEAD-SMD;600ohm,2012,1000mA,TP,520ohm/90	1	SNA
....4	T0568	3301-001569	BEAD-SMD;600ohm,2012,1000mA,TP,520ohm/90	1	SNA
....4	T0568	3301-001569	BEAD-SMD;600ohm,2012,1000mA,TP,520ohm/90	1	SNA
....4	MP1.1	BN41-00684A	PCB-DIGITAL B/D;BORDEAUX,FR-4,6L,1.0,1.6	1	SNA
....4	M0018	BN97-00805K	ASSY MICOM;T-XXXX-XXXX,DTV MODULE,XEE,20	1	SA
.....5	IC115	1107-001475	IC-FLASH MEMORY;29LV320,32MBIT,4MX8/2MX1	1	SA
....4	IC104	0801-002172	IC-CMOS LOGIC;74LCX16244,BUFFER/LINE DRI	1	SA
....4	T0087	1203-003704	IC-POSI.FIXED REG.;G953-18T6U,SOT-223,3P	1	SA
...3	T0066	BP62-00017A	HEAT SINK-ES;SP-50L2HX,A6063S,T2.0,26.2,	1	SNA
..2	M0014	BN94-01001A	ASSY PCB MAIN-AMZ;LE26R74BDX/*	1	SNA
...3	T0245	0202-001522	SOLDER-WIRE FLUX;LFA3-107,-,D1.2,96.5Sn/	0.25	SNA
...3	JA2007	3701-001294	CONNECTOR-DSUB;15P,3R,FEMALE,STRAIGHT,AU	1	SA
...3	CN902	3703-001600	CONNECTOR-BACK PANEL;32P,2R,FEMALE,ANGLE	1	SA
...3	CN902	3703-001600	CONNECTOR-BACK PANEL;32P,2R,FEMALE,ANGLE	1	SA
...3	CN4002	3711-004484	HEADER-BOARD TO CABLE;BOX,5P,1R,2mm,STRA	1	SA
...3	CN4004	3711-005606	HEADER-BOARD TO CABLE;BOX,30P,2R,2mm,STR	1	SA
...3	CN1001	3711-005942	HEADER-BOARD TO CABLE;BOX,16P,1R,2mm,STR	1	SA
...3	JA2001	3722-000498	JACK-SCART;21P,-,SN,BLK,NO	1	SA
...3	JA2005	3722-000498	JACK-SCART;21P,-,SN,BLK,NO	1	SA
...3	JA2003	3722-001061	JACK-PHONE;1P,3.6PI,AG,BLK,N	1	SA
...3	JA2006	3722-001061	JACK-PHONE;1P,3.6PI,AG,BLK,N	1	SA
...3	JA2012_26	3722-001061	JACK-PHONE;1P,3.6PI,AG,BLK,N	1	SA

ELECTRONIC SERVICE TIRGOVISTE

Level	Loc. No.	Code No.	Description & Specification	Q'ty	SA/SNA
...3	JA2008_26	3722-001734	JACK-VHS;4P,SN,BLK,STRAIGHT	1	SA
...3	JA2010	3722-002360	JACK-PIN;3P,AU,GRN/BLU/RED,STRAIGHT	1	SA
...3	JA2002	3722-002362	JACK-PIN;2P,Sn,WHT/RED,STRAIGHT	1	SA
...3	JA2004	3722-002362	JACK-PIN;2P,Sn,WHT/RED,STRAIGHT	1	SA
...3	JA2009	3722-002362	JACK-PIN;2P,Sn,WHT/RED,STRAIGHT	1	SA
...3	JA2011_26	3722-002363	JACK-PIN;3P,Sn,YEL/WHT/RED,STRAIGHT	1	SA
...3	T0562	6046-001013	STAND OFF;M3,L5,Ni PLT,SUM24L,#4-40	2	SNA
...3	CIS3	BN40-00080A	TUNER;DNOS403ZH261B(S),DNOS403ZH261B(S),	1	SA
...3	T0852	BN96-01470A	ASSY BOARD P-OPTICAL;HP-P5581,OPTICAL	1	SA
....4	CN906	3707-001067	CONNECTOR-OPTICAL;PLUG,SM,-,4.4/2.0mm	1	SA
...3		BN97-01036A	ASSY SMD-AMZ;LE26R74BDX/*	1	SNA
....4	CIS05	0202-001477	SOLDER-CREAM;LST309-M,-,D20~45§-,96.5Sn/	3.577	SNA
....4	D2003	0401-001056	DIODE-SWITCHING;MMBD4148SE,100V,200mA,SO	1	SA
....4	D2010	0401-001056	DIODE-SWITCHING;MMBD4148SE,100V,200mA,SO	1	SA
....4	D2011	0401-001056	DIODE-SWITCHING;MMBD4148SE,100V,200mA,SO	1	SA
....4	D2012	0401-001056	DIODE-SWITCHING;MMBD4148SE,100V,200mA,SO	1	SA
....4	D2013	0401-001056	DIODE-SWITCHING;MMBD4148SE,100V,200mA,SO	1	SA
....4	D2016	0401-001056	DIODE-SWITCHING;MMBD4148SE,100V,200mA,SO	1	SA
....4	D2017	0401-001056	DIODE-SWITCHING;MMBD4148SE,100V,200mA,SO	1	SA
....4	D2018	0401-001056	DIODE-SWITCHING;MMBD4148SE,100V,200mA,SO	1	SA
....4	D2019	0401-001056	DIODE-SWITCHING;MMBD4148SE,100V,200mA,SO	1	SA
....4	D2020	0401-001056	DIODE-SWITCHING;MMBD4148SE,100V,200mA,SO	1	SA
....4	D2021	0401-001056	DIODE-SWITCHING;MMBD4148SE,100V,200mA,SO	1	SA
....4	D2022	0401-001056	DIODE-SWITCHING;MMBD4148SE,100V,200mA,SO	1	SA
....4	D2023	0401-001056	DIODE-SWITCHING;MMBD4148SE,100V,200mA,SO	1	SA
....4	D2032	0401-001056	DIODE-SWITCHING;MMBD4148SE,100V,200mA,SO	1	SA
....4	D2033	0401-001056	DIODE-SWITCHING;MMBD4148SE,100V,200mA,SO	1	SA
....4	D2034	0401-001056	DIODE-SWITCHING;MMBD4148SE,100V,200mA,SO	1	SA
....4	D2044	0401-001056	DIODE-SWITCHING;MMBD4148SE,100V,200mA,SO	1	SA
....4	D2047_26	0401-001056	DIODE-SWITCHING;MMBD4148SE,100V,200mA,SO	1	SA
....4	D2053_26	0401-001056	DIODE-SWITCHING;MMBD4148SE,100V,200mA,SO	1	SA
....4	D2057	0401-001056	DIODE-SWITCHING;MMBD4148SE,100V,200mA,SO	1	SA
....4	D2060_26	0401-001056	DIODE-SWITCHING;MMBD4148SE,100V,200mA,SO	1	SA
....4	D5001	0401-001056	DIODE-SWITCHING;MMBD4148SE,100V,200mA,SO	1	SA
....4	D5002	0401-001056	DIODE-SWITCHING;MMBD4148SE,100V,200mA,SO	1	SA
....4	D5003	0401-001056	DIODE-SWITCHING;MMBD4148SE,100V,200mA,SO	1	SA
....4	D5004	0401-001056	DIODE-SWITCHING;MMBD4148SE,100V,200mA,SO	1	SA
....4	D5005	0401-001056	DIODE-SWITCHING;MMBD4148SE,100V,200mA,SO	1	SA
....4	D5006	0401-001056	DIODE-SWITCHING;MMBD4148SE,100V,200mA,SO	1	SA
....4	D1001	0402-000553	DIODE-SCHOTTKY;"SS24,B240",40V,2000mA,DO	1	SA
....4	D1004	0402-000553	DIODE-SCHOTTKY;"SS24,B240",40V,2000mA,DO	1	SA
....4	D1008	0403-000258	DIODE-ZENER;BZX84C5V6,5.2-6V,225mW,SOT-2	1	SA
....4	D3003	0403-000258	DIODE-ZENER;BZX84C5V6,5.2-6V,225mW,SOT-2	1	SA
....4	D2001	0403-000620	DIODE-ZENER;RLZ5.6B,5.45-5.73V,500mW,LL-	1	SA
....4	D2002	0403-000620	DIODE-ZENER;RLZ5.6B,5.45-5.73V,500mW,LL-	1	SA
....4	D2040	0403-000620	DIODE-ZENER;RLZ5.6B,5.45-5.73V,500mW,LL-	1	SA
....4	D2041	0403-000620	DIODE-ZENER;RLZ5.6B,5.45-5.73V,500mW,LL-	1	SA
....4	D2042	0403-000620	DIODE-ZENER;RLZ5.6B,5.45-5.73V,500mW,LL-	1	SA
....4	D2043	0403-000620	DIODE-ZENER;RLZ5.6B,5.45-5.73V,500mW,LL-	1	SA
....4	D2064	0403-000620	DIODE-ZENER;RLZ5.6B,5.45-5.73V,500mW,LL-	1	SA
....4	D2065	0403-000620	DIODE-ZENER;RLZ5.6B,5.45-5.73V,500mW,LL-	1	SA
....4	D3006	0403-000620	DIODE-ZENER;RLZ5.6B,5.45-5.73V,500mW,LL-	1	SA
....4	D3008	0403-000620	DIODE-ZENER;RLZ5.6B,5.45-5.73V,500mW,LL-	1	SA
....4	D4001	0403-000620	DIODE-ZENER;RLZ5.6B,5.45-5.73V,500mW,LL-	1	SA
....4	D4002	0403-000620	DIODE-ZENER;RLZ5.6B,5.45-5.73V,500mW,LL-	1	SA
....4	D4003	0403-000620	DIODE-ZENER;RLZ5.6B,5.45-5.73V,500mW,LL-	1	SA
....4	D4005	0403-000620	DIODE-ZENER;RLZ5.6B,5.45-5.73V,500mW,LL-	1	SA
....4	D4006	0403-000620	DIODE-ZENER;RLZ5.6B,5.45-5.73V,500mW,LL-	1	SA
....4	D4007	0403-000620	DIODE-ZENER;RLZ5.6B,5.45-5.73V,500mW,LL-	1	SA
....4	D4008	0403-000620	DIODE-ZENER;RLZ5.6B,5.45-5.73V,500mW,LL-	1	SA

ELECTRONICSERVICE TIRGOVISTE

Level	Loc. No.	Code No.	Description & Specification	Q'ty	SA/SNA
....4	D4009	0403-000620	DIODE-ZENER;RLZ5.6B,5.45-5.73V,500mW,LL-	1	SA
....4	D4010	0403-000620	DIODE-ZENER;RLZ5.6B,5.45-5.73V,500mW,LL-	1	SA
....4	D4011	0403-000620	DIODE-ZENER;RLZ5.6B,5.45-5.73V,500mW,LL-	1	SA
....4	D4012	0403-000620	DIODE-ZENER;RLZ5.6B,5.45-5.73V,500mW,LL-	1	SA
....4	D2004	0403-001016	DIODE-ZENER;RLZ6.2B,5.96-6.27V,500mW,LL-	1	SA
....4	D2009	0403-001169	DIODE-ZENER;RLZ16C,15.96-16.51V,500MW,LL	1	SA
....4	D2039	0403-001169	DIODE-ZENER;RLZ16C,15.96-16.51V,500MW,LL	1	SA
....4	D2005	0406-001172	DIODE-TVS;CDS3C30GTH,48V,0W,SMD	1	SA
....4	D2006	0406-001172	DIODE-TVS;CDS3C30GTH,48V,0W,SMD	1	SA
....4	D2007	0406-001172	DIODE-TVS;CDS3C30GTH,48V,0W,SMD	1	SA
....4	D2008	0406-001172	DIODE-TVS;CDS3C30GTH,48V,0W,SMD	1	SA
....4	D2014	0406-001172	DIODE-TVS;CDS3C30GTH,48V,0W,SMD	1	SA
....4	D2015	0406-001172	DIODE-TVS;CDS3C30GTH,48V,0W,SMD	1	SA
....4	D2024	0406-001172	DIODE-TVS;CDS3C30GTH,48V,0W,SMD	1	SA
....4	D2025	0406-001172	DIODE-TVS;CDS3C30GTH,48V,0W,SMD	1	SA
....4	D2026	0406-001172	DIODE-TVS;CDS3C30GTH,48V,0W,SMD	1	SA
....4	D2027	0406-001172	DIODE-TVS;CDS3C30GTH,48V,0W,SMD	1	SA
....4	D2028	0406-001172	DIODE-TVS;CDS3C30GTH,48V,0W,SMD	1	SA
....4	D2029	0406-001172	DIODE-TVS;CDS3C30GTH,48V,0W,SMD	1	SA
....4	D2030	0406-001172	DIODE-TVS;CDS3C30GTH,48V,0W,SMD	1	SA
....4	D2031	0406-001172	DIODE-TVS;CDS3C30GTH,48V,0W,SMD	1	SA
....4	D2035	0406-001172	DIODE-TVS;CDS3C30GTH,48V,0W,SMD	1	SA
....4	D2036	0406-001172	DIODE-TVS;CDS3C30GTH,48V,0W,SMD	1	SA
....4	D2037	0406-001172	DIODE-TVS;CDS3C30GTH,48V,0W,SMD	1	SA
....4	D2038	0406-001172	DIODE-TVS;CDS3C30GTH,48V,0W,SMD	1	SA
....4	D2045_26	0406-001172	DIODE-TVS;CDS3C30GTH,48V,0W,SMD	1	SA
....4	D2046_26	0406-001172	DIODE-TVS;CDS3C30GTH,48V,0W,SMD	1	SA
....4	D2048_26	0406-001172	DIODE-TVS;CDS3C30GTH,48V,0W,SMD	1	SA
....4	D2049_26	0406-001172	DIODE-TVS;CDS3C30GTH,48V,0W,SMD	1	SA
....4	D2050_26	0406-001172	DIODE-TVS;CDS3C30GTH,48V,0W,SMD	1	SA
....4	D2051	0406-001172	DIODE-TVS;CDS3C30GTH,48V,0W,SMD	1	SA
....4	D2052	0406-001172	DIODE-TVS;CDS3C30GTH,48V,0W,SMD	1	SA
....4	D2054	0406-001172	DIODE-TVS;CDS3C30GTH,48V,0W,SMD	1	SA
....4	D2055	0406-001172	DIODE-TVS;CDS3C30GTH,48V,0W,SMD	1	SA
....4	D2056	0406-001172	DIODE-TVS;CDS3C30GTH,48V,0W,SMD	1	SA
....4	D2058_26	0406-001172	DIODE-TVS;CDS3C30GTH,48V,0W,SMD	1	SA
....4	D2059_26	0406-001172	DIODE-TVS;CDS3C30GTH,48V,0W,SMD	1	SA
....4	D1002	0407-000123	DIODE-ARRAY;DAN202K,80V,100mA,CA2-3,SOT-	1	SA
....4	D1009	0407-000123	DIODE-ARRAY;DAN202K,80V,100mA,CA2-3,SOT-	1	SA
....4	D3001	0407-000123	DIODE-ARRAY;DAN202K,80V,100mA,CA2-3,SOT-	1	SA
....4	D3002	0407-000123	DIODE-ARRAY;DAN202K,80V,100mA,CA2-3,SOT-	1	SA
....4	Q1007	0501-000280	TR-SMALL SIGNAL;KSA1182,PNP,150MW,SOT-23	1	SA
....4	Q1001	0501-000342	TR-SMALL SIGNAL;KSC1623-Y,NPN,200mW,SOT-	1	SA
....4	Q1002	0501-000342	TR-SMALL SIGNAL;KSC1623-Y,NPN,200mW,SOT-	1	SA
....4	Q1005	0501-000342	TR-SMALL SIGNAL;KSC1623-Y,NPN,200mW,SOT-	1	SA
....4	Q1006	0501-000342	TR-SMALL SIGNAL;KSC1623-Y,NPN,200mW,SOT-	1	SA
....4	Q1008	0501-000342	TR-SMALL SIGNAL;KSC1623-Y,NPN,200mW,SOT-	1	SA
....4	Q1009	0501-000342	TR-SMALL SIGNAL;KSC1623-Y,NPN,200mW,SOT-	1	SA
....4	Q1010	0501-000342	TR-SMALL SIGNAL;KSC1623-Y,NPN,200mW,SOT-	1	SA
....4	Q1011	0501-000342	TR-SMALL SIGNAL;KSC1623-Y,NPN,200mW,SOT-	1	SA
....4	Q1013	0501-000342	TR-SMALL SIGNAL;KSC1623-Y,NPN,200mW,SOT-	1	SA
....4	Q1014	0501-000342	TR-SMALL SIGNAL;KSC1623-Y,NPN,200mW,SOT-	1	SA
....4	Q2001	0501-000342	TR-SMALL SIGNAL;KSC1623-Y,NPN,200mW,SOT-	1	SA
....4	Q3001	0501-000342	TR-SMALL SIGNAL;KSC1623-Y,NPN,200mW,SOT-	1	SA
....4	Q3003	0501-000342	TR-SMALL SIGNAL;KSC1623-Y,NPN,200mW,SOT-	1	SA
....4	Q3008	0501-000342	TR-SMALL SIGNAL;KSC1623-Y,NPN,200mW,SOT-	1	SA
....4	Q3010	0501-000342	TR-SMALL SIGNAL;KSC1623-Y,NPN,200mW,SOT-	1	SA
....4	Q3011	0501-000342	TR-SMALL SIGNAL;KSC1623-Y,NPN,200mW,SOT-	1	SA
....4	Q4001	0501-000342	TR-SMALL SIGNAL;KSC1623-Y,NPN,200mW,SOT-	1	SA
....4	Q5010	0501-000342	TR-SMALL SIGNAL;KSC1623-Y,NPN,200mW,SOT-	1	SA

ELECTRONIC SERVICE TIRGOVISTE

Level	Loc. No.	Code No.	Description & Specification	Q'ty	SA/SNA
....4	Q1003	0501-002080	TR-SMALL SIGNAL;2SC2412K,NPN,200mW,SC-59	1	SA
....4	Q1004	0501-002080	TR-SMALL SIGNAL;2SC2412K,NPN,200mW,SC-59	1	SA
....4	Q5011	0501-002080	TR-SMALL SIGNAL;2SC2412K,NPN,200mW,SC-59	1	SA
....4	Q409	0505-000110	FET-SILICON;2N7002,N,60V,115mA,7.5ohm,0.	1	SA
....4	Q409	0505-000110	FET-SILICON;2N7002,N,60V,115mA,7.5ohm,0.	1	SA
....4	Q409	0505-000110	FET-SILICON;2N7002,N,60V,115mA,7.5ohm,0.	1	SA
....4	Q409	0505-000110	FET-SILICON;2N7002,N,60V,115mA,7.5ohm,0.	1	SA
....4	Q409	0505-000110	FET-SILICON;2N7002,N,60V,115mA,7.5ohm,0.	1	SA
....4	Q409	0505-001170	FET-SILICON;SI9933ADY-T1,P,-20V,3.4A,0.0	1	SA
....4	IC104	0801-002095	IC-CMOS LOGIC;74LCX245,TRANSCEIVER,TSSOP	1	SA
....4	IC3002	0903-001432	IC-MICROCOMPUTER;M30840SGP,16Bit,LQFP,10	1	SA
....4	IC1003	1001-000164	IC-ANALOG MULTIPLEX;74HC4052,CMOS,SOP,16	1	SA
....4	IC1006	1001-000164	IC-ANALOG MULTIPLEX;74HC4052,CMOS,SOP,16	1	SA
....4	IC106	1001-001082	IC-VIDEO SWITCH;BA7657F,-,SOP,24P,300MIL	1	SA
....4	IC3006	1001-001109	IC-ANALOG SWITCH;FST3125M,BUS SWITCH & C	1	SA
....4	IC5005	1001-001109	IC-ANALOG SWITCH;FST3125M,BUS SWITCH & C	1	SA
....4	IC107	1002-001399	IC-D/A CONVERTER;PCM1754,24BIT,SSOP,16P,	1	SA
....4	IC110	1006-001076	IC-DRIVER/RECEIVER;MAX232ECWE+T,SOP,16P,	1	SA
....4	IC112	1103-000129	IC-EEPROM;24C02,2Kbit,256x8Bit,SOP,8P,5x	1	SA
....4	IC112	1103-000129	IC-EEPROM;24C02,2Kbit,256x8Bit,SOP,8P,5x	1	SA
....4	IC112	1103-001279	IC-EEPROM;24C32,32Kbit,4Kx8Bit,SOP,8P,5x	1	SA
....4	IC5002	1105-001538	IC-VIDEO RAM;K4D263238,-,128M,4x1Mx32Bit	1	SA
....4	DU410	1201-000166	IC-OP AMP;LM358,SOP,ST,8P,150MIL,DUAL,10	1	SA
....4	T0085	1201-002136	IC-AUDIO AMP;LM4810,MSOP,8P,3x3mm,DUAL,-	1	SA
....4	T0085	1201-002246	IC-AUDIO AMP;STA323W,SO,36P,15.9x11mm,-,	1	SA
....4	IC150	1203-001009	IC-SWITCH REG.;3172,SOP,8P,244MIL,PLASTI	1	SA
....4	IC3009	1203-001559	IC-RESET;DS1834A,SOIC,8P,150MIL,PLASTIC,	1	SA
....4	IC4006_26	1203-001559	IC-RESET;DS1834A,SOIC,8P,150MIL,PLASTIC,	1	SA
....4	T0087	1203-001815	IC-POSI.FIXED REG.;78M09,TO-252,3P,-,PLA	1	SA
....4	T0087	1203-001816	IC-POSI.FIXED REG.;78M08,TO-252,3P,-,PLA	1	SA
....4	T0087	1203-002842	IC-POSI.FIXED REG.;AP1117D-33A,TO-252,3P	1	SA
....4	T0087	1203-002842	IC-POSI.FIXED REG.;AP1117D-33A,TO-252,3P	1	SA
....4	T0087	1203-002842	IC-POSI.FIXED REG.;AP1117D-33A,TO-252,3P	1	SA
....4	T0087	1203-002855	IC-POSI.FIXED REG.;MC33269DTRK-5.0,DPRK,	1	SA
....4	T0087	1203-002974	IC-POSI.FIXED REG.;AP1117D-25A,TO-252,3P	1	SA
....4	T0170	1203-003059	IC-SWITCH VOL. REG.;MP1583,SOIC,8P,4.9x3	1	SA
....4	IC1009	1204-002464	IC-AUDIO PROCESSOR;STV8257DSX,TQFP,80P,1	1	SA
....4	IC118	1204-002503	IC-VIDEO PROCESS;SVP-PX56-7256,PQFP,256P	1	SNA
....4	R2024	2007-000040	R-CHIP;150ohm,1%,1/10W,TP,1608	1	SA
....4	R5026	2007-000043	R-CHIP;1Kohm,1%,1/10W,TP,1608	1	SA
....4	R5029	2007-000043	R-CHIP;1Kohm,1%,1/10W,TP,1608	1	SA
....4	R3088	2007-000052	R-CHIP;10Kohm,1%,1/10W,TP,1608	1	SA
....4	R3100	2007-000052	R-CHIP;10Kohm,1%,1/10W,TP,1608	1	SA
....4	R3101	2007-000052	R-CHIP;10Kohm,1%,1/10W,TP,1608	1	SA
....4	R3102	2007-000052	R-CHIP;10Kohm,1%,1/10W,TP,1608	1	SA
....4	R3103	2007-000052	R-CHIP;10Kohm,1%,1/10W,TP,1608	1	SA
....4	R3104	2007-000052	R-CHIP;10Kohm,1%,1/10W,TP,1608	1	SA
....4	R3105	2007-000052	R-CHIP;10Kohm,1%,1/10W,TP,1608	1	SA
....4	R3106	2007-000052	R-CHIP;10Kohm,1%,1/10W,TP,1608	1	SA
....4	R3107	2007-000052	R-CHIP;10Kohm,1%,1/10W,TP,1608	1	SA
....4	R3130	2007-000052	R-CHIP;10Kohm,1%,1/10W,TP,1608	1	SA
....4	R3141	2007-000052	R-CHIP;10Kohm,1%,1/10W,TP,1608	1	SA
....4	R5013	2007-000060	R-CHIP;100Kohm,1%,1/10W,TP,1608	1	SA
....4	R1066	2007-000067	R-CHIP;15Kohm,1%,1/10W,TP,1608	1	SA
....4	R1059	2007-000070	R-CHIP;0ohm,5%,1/10W,TP,1608	1	SA
....4	R1085	2007-000070	R-CHIP;0ohm,5%,1/10W,TP,1608	1	SA
....4	R1086	2007-000070	R-CHIP;0ohm,5%,1/10W,TP,1608	1	SA
....4	R1087	2007-000070	R-CHIP;0ohm,5%,1/10W,TP,1608	1	SA
....4	R2055	2007-000070	R-CHIP;0ohm,5%,1/10W,TP,1608	1	SA
....4	R2064	2007-000070	R-CHIP;0ohm,5%,1/10W,TP,1608	1	SA

ELECTRONIC SERVICE TIRGOVISTE

Level	Loc. No.	Code No.	Description & Specification	Q'ty	SA/SNA
....4	R2080	2007-000070	R-CHIP;0ohm,5%,1/10W,TP,1608	1	SA
....4	R3003	2007-000070	R-CHIP;0ohm,5%,1/10W,TP,1608	1	SA
....4	R3019	2007-000070	R-CHIP;0ohm,5%,1/10W,TP,1608	1	SA
....4	R3024	2007-000070	R-CHIP;0ohm,5%,1/10W,TP,1608	1	SA
....4	R3025_LVDS	2007-000070	R-CHIP;0ohm,5%,1/10W,TP,1608	1	SA
....4	R3026	2007-000070	R-CHIP;0ohm,5%,1/10W,TP,1608	1	SA
....4	R3027	2007-000070	R-CHIP;0ohm,5%,1/10W,TP,1608	1	SA
....4	R3028	2007-000070	R-CHIP;0ohm,5%,1/10W,TP,1608	1	SA
....4	R3029	2007-000070	R-CHIP;0ohm,5%,1/10W,TP,1608	1	SA
....4	R3031	2007-000070	R-CHIP;0ohm,5%,1/10W,TP,1608	1	SA
....4	R3032	2007-000070	R-CHIP;0ohm,5%,1/10W,TP,1608	1	SA
....4	R3033	2007-000070	R-CHIP;0ohm,5%,1/10W,TP,1608	1	SA
....4	R3035	2007-000070	R-CHIP;0ohm,5%,1/10W,TP,1608	1	SA
....4	R3037	2007-000070	R-CHIP;0ohm,5%,1/10W,TP,1608	1	SA
....4	R3039	2007-000070	R-CHIP;0ohm,5%,1/10W,TP,1608	1	SA
....4	R3040	2007-000070	R-CHIP;0ohm,5%,1/10W,TP,1608	1	SA
....4	R3041	2007-000070	R-CHIP;0ohm,5%,1/10W,TP,1608	1	SA
....4	R3043	2007-000070	R-CHIP;0ohm,5%,1/10W,TP,1608	1	SA
....4	R3047_LVDS	2007-000070	R-CHIP;0ohm,5%,1/10W,TP,1608	1	SA
....4	R3089	2007-000070	R-CHIP;0ohm,5%,1/10W,TP,1608	1	SA
....4	R3090	2007-000070	R-CHIP;0ohm,5%,1/10W,TP,1608	1	SA
....4	R3117	2007-000070	R-CHIP;0ohm,5%,1/10W,TP,1608	1	SA
....4	R3118	2007-000070	R-CHIP;0ohm,5%,1/10W,TP,1608	1	SA
....4	R3132	2007-000070	R-CHIP;0ohm,5%,1/10W,TP,1608	1	SA
....4	R4001	2007-000070	R-CHIP;0ohm,5%,1/10W,TP,1608	1	SA
....4	R4002	2007-000070	R-CHIP;0ohm,5%,1/10W,TP,1608	1	SA
....4	R4003	2007-000070	R-CHIP;0ohm,5%,1/10W,TP,1608	1	SA
....4	R4012	2007-000070	R-CHIP;0ohm,5%,1/10W,TP,1608	1	SA
....4	R4016	2007-000070	R-CHIP;0ohm,5%,1/10W,TP,1608	1	SA
....4	R4017	2007-000070	R-CHIP;0ohm,5%,1/10W,TP,1608	1	SA
....4	R4018	2007-000070	R-CHIP;0ohm,5%,1/10W,TP,1608	1	SA
....4	R4019	2007-000070	R-CHIP;0ohm,5%,1/10W,TP,1608	1	SA
....4	R4032	2007-000070	R-CHIP;0ohm,5%,1/10W,TP,1608	1	SA
....4	R4033	2007-000070	R-CHIP;0ohm,5%,1/10W,TP,1608	1	SA
....4	R4035	2007-000070	R-CHIP;0ohm,5%,1/10W,TP,1608	1	SA
....4	R4086_EN	2007-000070	R-CHIP;0ohm,5%,1/10W,TP,1608	1	SA
....4	R4090	2007-000070	R-CHIP;0ohm,5%,1/10W,TP,1608	1	SA
....4	R5012	2007-000070	R-CHIP;0ohm,5%,1/10W,TP,1608	1	SA
....4	R5014	2007-000070	R-CHIP;0ohm,5%,1/10W,TP,1608	1	SA
....4	R5068	2007-000070	R-CHIP;0ohm,5%,1/10W,TP,1608	1	SA
....4	R5076	2007-000070	R-CHIP;0ohm,5%,1/10W,TP,1608	1	SA
....4	R5084	2007-000070	R-CHIP;0ohm,5%,1/10W,TP,1608	1	SA
....4	R5087	2007-000070	R-CHIP;0ohm,5%,1/10W,TP,1608	1	SA
....4	R5099	2007-000070	R-CHIP;0ohm,5%,1/10W,TP,1608	1	SA
....4	R5100	2007-000070	R-CHIP;0ohm,5%,1/10W,TP,1608	1	SA
....4	R5101	2007-000070	R-CHIP;0ohm,5%,1/10W,TP,1608	1	SA
....4	R5103	2007-000070	R-CHIP;0ohm,5%,1/10W,TP,1608	1	SA
....4	R5115	2007-000070	R-CHIP;0ohm,5%,1/10W,TP,1608	1	SA
....4	R5116	2007-000070	R-CHIP;0ohm,5%,1/10W,TP,1608	1	SA
....4	R5117	2007-000070	R-CHIP;0ohm,5%,1/10W,TP,1608	1	SA
....4	R5120	2007-000070	R-CHIP;0ohm,5%,1/10W,TP,1608	1	SA
....4	R1084	2007-000071	R-CHIP;22ohm,5%,1/10W,TP,1608	1	SA
....4	R1095	2007-000071	R-CHIP;22ohm,5%,1/10W,TP,1608	1	SA
....4	R2050	2007-000071	R-CHIP;22ohm,5%,1/10W,TP,1608	1	SA
....4	R2063	2007-000071	R-CHIP;22ohm,5%,1/10W,TP,1608	1	SA
....4	R2106	2007-000071	R-CHIP;22ohm,5%,1/10W,TP,1608	1	SA
....4	R2107	2007-000071	R-CHIP;22ohm,5%,1/10W,TP,1608	1	SA
....4	R2108	2007-000071	R-CHIP;22ohm,5%,1/10W,TP,1608	1	SA
....4	R2109	2007-000071	R-CHIP;22ohm,5%,1/10W,TP,1608	1	SA
....4	R2110	2007-000071	R-CHIP;22ohm,5%,1/10W,TP,1608	1	SA

ELECTRONIC SERVICE TIRGOVISTE

Level	Loc. No.	Code No.	Description & Specification	Q'ty	SA/SNA
....4	R2111	2007-000071	R-CHIP;22ohm,5%,1/10W,TP,1608	1	SA
....4	R2112	2007-000071	R-CHIP;22ohm,5%,1/10W,TP,1608	1	SA
....4	R2113	2007-000071	R-CHIP;22ohm,5%,1/10W,TP,1608	1	SA
....4	R4015	2007-000071	R-CHIP;22ohm,5%,1/10W,TP,1608	1	SA
....4	R4020	2007-000071	R-CHIP;22ohm,5%,1/10W,TP,1608	1	SA
....4	R4093	2007-000071	R-CHIP;22ohm,5%,1/10W,TP,1608	1	SA
....4	R5030	2007-000071	R-CHIP;22ohm,5%,1/10W,TP,1608	1	SA
....4	R5031	2007-000071	R-CHIP;22ohm,5%,1/10W,TP,1608	1	SA
....4	R5032	2007-000071	R-CHIP;22ohm,5%,1/10W,TP,1608	1	SA
....4	R5033	2007-000071	R-CHIP;22ohm,5%,1/10W,TP,1608	1	SA
....4	R5061	2007-000071	R-CHIP;22ohm,5%,1/10W,TP,1608	1	SA
....4	R5065	2007-000071	R-CHIP;22ohm,5%,1/10W,TP,1608	1	SA
....4	R5071	2007-000071	R-CHIP;22ohm,5%,1/10W,TP,1608	1	SA
....4	R5077	2007-000071	R-CHIP;22ohm,5%,1/10W,TP,1608	1	SA
....4	R5081	2007-000071	R-CHIP;22ohm,5%,1/10W,TP,1608	1	SA
....4	R5085	2007-000071	R-CHIP;22ohm,5%,1/10W,TP,1608	1	SA
....4	R5088	2007-000071	R-CHIP;22ohm,5%,1/10W,TP,1608	1	SA
....4	R5090	2007-000071	R-CHIP;22ohm,5%,1/10W,TP,1608	1	SA
....4	R5094	2007-000071	R-CHIP;22ohm,5%,1/10W,TP,1608	1	SA
....4	R5098	2007-000071	R-CHIP;22ohm,5%,1/10W,TP,1608	1	SA
....4	R5102	2007-000071	R-CHIP;22ohm,5%,1/10W,TP,1608	1	SA
....4	R5104	2007-000071	R-CHIP;22ohm,5%,1/10W,TP,1608	1	SA
....4	R5106	2007-000071	R-CHIP;22ohm,5%,1/10W,TP,1608	1	SA
....4	R5108	2007-000071	R-CHIP;22ohm,5%,1/10W,TP,1608	1	SA
....4	R1061	2007-000072	R-CHIP;47ohm,5%,1/10W,TP,1608	1	SA
....4	R1063	2007-000072	R-CHIP;47ohm,5%,1/10W,TP,1608	1	SA
....4	R2007	2007-000072	R-CHIP;47ohm,5%,1/10W,TP,1608	1	SA
....4	R2008	2007-000072	R-CHIP;47ohm,5%,1/10W,TP,1608	1	SA
....4	R2049	2007-000072	R-CHIP;47ohm,5%,1/10W,TP,1608	1	SA
....4	R2051	2007-000072	R-CHIP;47ohm,5%,1/10W,TP,1608	1	SA
....4	R4104	2007-000072	R-CHIP;47ohm,5%,1/10W,TP,1608	1	SA
....4	R4105	2007-000072	R-CHIP;47ohm,5%,1/10W,TP,1608	1	SA
....4	R4106	2007-000072	R-CHIP;47ohm,5%,1/10W,TP,1608	1	SA
....4	R4107	2007-000072	R-CHIP;47ohm,5%,1/10W,TP,1608	1	SA
....4	R4108	2007-000072	R-CHIP;47ohm,5%,1/10W,TP,1608	1	SA
....4	R4109	2007-000072	R-CHIP;47ohm,5%,1/10W,TP,1608	1	SA
....4	R4110	2007-000072	R-CHIP;47ohm,5%,1/10W,TP,1608	1	SA
....4	R4111	2007-000072	R-CHIP;47ohm,5%,1/10W,TP,1608	1	SA
....4	R4112	2007-000072	R-CHIP;47ohm,5%,1/10W,TP,1608	1	SA
....4	R4113	2007-000072	R-CHIP;47ohm,5%,1/10W,TP,1608	1	SA
....4	R5019	2007-000072	R-CHIP;47ohm,5%,1/10W,TP,1608	1	SA
....4	R5020	2007-000072	R-CHIP;47ohm,5%,1/10W,TP,1608	1	SA
....4	R5048	2007-000072	R-CHIP;47ohm,5%,1/10W,TP,1608	1	SA
....4	R5050	2007-000072	R-CHIP;47ohm,5%,1/10W,TP,1608	1	SA
....4	R1009	2007-000074	R-CHIP;100ohm,5%,1/10W,TP,1608	1	SA
....4	R1010	2007-000074	R-CHIP;100ohm,5%,1/10W,TP,1608	1	SA
....4	R1011	2007-000074	R-CHIP;100ohm,5%,1/10W,TP,1608	1	SA
....4	R1012	2007-000074	R-CHIP;100ohm,5%,1/10W,TP,1608	1	SA
....4	R1013	2007-000074	R-CHIP;100ohm,5%,1/10W,TP,1608	1	SA
....4	R1014	2007-000074	R-CHIP;100ohm,5%,1/10W,TP,1608	1	SA
....4	R1017	2007-000074	R-CHIP;100ohm,5%,1/10W,TP,1608	1	SA
....4	R1018	2007-000074	R-CHIP;100ohm,5%,1/10W,TP,1608	1	SA
....4	R1032	2007-000074	R-CHIP;100ohm,5%,1/10W,TP,1608	1	SA
....4	R1033	2007-000074	R-CHIP;100ohm,5%,1/10W,TP,1608	1	SA
....4	R1037	2007-000074	R-CHIP;100ohm,5%,1/10W,TP,1608	1	SA
....4	R1040	2007-000074	R-CHIP;100ohm,5%,1/10W,TP,1608	1	SA
....4	R1042	2007-000074	R-CHIP;100ohm,5%,1/10W,TP,1608	1	SA
....4	R1047	2007-000074	R-CHIP;100ohm,5%,1/10W,TP,1608	1	SA
....4	R1048	2007-000074	R-CHIP;100ohm,5%,1/10W,TP,1608	1	SA
....4	R1049	2007-000074	R-CHIP;100ohm,5%,1/10W,TP,1608	1	SA

ELECTRONIC SERVICE TIRGOVISTE

Level	Loc. No.	Code No.	Description & Specification	Q'ty	SA/SNA
....4	R1050	2007-000074	R-CHIP;100ohm,5%,1/10W,TP,1608	1	SA
....4	R1052	2007-000074	R-CHIP;100ohm,5%,1/10W,TP,1608	1	SA
....4	R1053	2007-000074	R-CHIP;100ohm,5%,1/10W,TP,1608	1	SA
....4	R1054	2007-000074	R-CHIP;100ohm,5%,1/10W,TP,1608	1	SA
....4	R1055	2007-000074	R-CHIP;100ohm,5%,1/10W,TP,1608	1	SA
....4	R1056	2007-000074	R-CHIP;100ohm,5%,1/10W,TP,1608	1	SA
....4	R1091	2007-000074	R-CHIP;100ohm,5%,1/10W,TP,1608	1	SA
....4	R1092	2007-000074	R-CHIP;100ohm,5%,1/10W,TP,1608	1	SA
....4	R1093	2007-000074	R-CHIP;100ohm,5%,1/10W,TP,1608	1	SA
....4	R2018	2007-000074	R-CHIP;100ohm,5%,1/10W,TP,1608	1	SA
....4	R2022	2007-000074	R-CHIP;100ohm,5%,1/10W,TP,1608	1	SA
....4	R2023	2007-000074	R-CHIP;100ohm,5%,1/10W,TP,1608	1	SA
....4	R2029	2007-000074	R-CHIP;100ohm,5%,1/10W,TP,1608	1	SA
....4	R2031	2007-000074	R-CHIP;100ohm,5%,1/10W,TP,1608	1	SA
....4	R2053	2007-000074	R-CHIP;100ohm,5%,1/10W,TP,1608	1	SA
....4	R2058	2007-000074	R-CHIP;100ohm,5%,1/10W,TP,1608	1	SA
....4	R2060	2007-000074	R-CHIP;100ohm,5%,1/10W,TP,1608	1	SA
....4	R2068	2007-000074	R-CHIP;100ohm,5%,1/10W,TP,1608	1	SA
....4	R2081	2007-000074	R-CHIP;100ohm,5%,1/10W,TP,1608	1	SA
....4	R2084	2007-000074	R-CHIP;100ohm,5%,1/10W,TP,1608	1	SA
....4	R2093	2007-000074	R-CHIP;100ohm,5%,1/10W,TP,1608	1	SA
....4	R3008	2007-000074	R-CHIP;100ohm,5%,1/10W,TP,1608	1	SA
....4	R3009	2007-000074	R-CHIP;100ohm,5%,1/10W,TP,1608	1	SA
....4	R3010	2007-000074	R-CHIP;100ohm,5%,1/10W,TP,1608	1	SA
....4	R3011	2007-000074	R-CHIP;100ohm,5%,1/10W,TP,1608	1	SA
....4	R3034	2007-000074	R-CHIP;100ohm,5%,1/10W,TP,1608	1	SA
....4	R3046	2007-000074	R-CHIP;100ohm,5%,1/10W,TP,1608	1	SA
....4	R3057	2007-000074	R-CHIP;100ohm,5%,1/10W,TP,1608	1	SA
....4	R3058	2007-000074	R-CHIP;100ohm,5%,1/10W,TP,1608	1	SA
....4	R3059	2007-000074	R-CHIP;100ohm,5%,1/10W,TP,1608	1	SA
....4	R3062	2007-000074	R-CHIP;100ohm,5%,1/10W,TP,1608	1	SA
....4	R3063	2007-000074	R-CHIP;100ohm,5%,1/10W,TP,1608	1	SA
....4	R3073	2007-000074	R-CHIP;100ohm,5%,1/10W,TP,1608	1	SA
....4	R3074	2007-000074	R-CHIP;100ohm,5%,1/10W,TP,1608	1	SA
....4	R3077	2007-000074	R-CHIP;100ohm,5%,1/10W,TP,1608	1	SA
....4	R3078	2007-000074	R-CHIP;100ohm,5%,1/10W,TP,1608	1	SA
....4	R3125	2007-000074	R-CHIP;100ohm,5%,1/10W,TP,1608	1	SA
....4	R3127	2007-000074	R-CHIP;100ohm,5%,1/10W,TP,1608	1	SA
....4	R3135	2007-000074	R-CHIP;100ohm,5%,1/10W,TP,1608	1	SA
....4	R4028	2007-000074	R-CHIP;100ohm,5%,1/10W,TP,1608	1	SA
....4	R4038	2007-000074	R-CHIP;100ohm,5%,1/10W,TP,1608	1	SA
....4	R4049	2007-000074	R-CHIP;100ohm,5%,1/10W,TP,1608	1	SA
....4	R4050	2007-000074	R-CHIP;100ohm,5%,1/10W,TP,1608	1	SA
....4	R4097	2007-000074	R-CHIP;100ohm,5%,1/10W,TP,1608	1	SA
....4	R4102	2007-000074	R-CHIP;100ohm,5%,1/10W,TP,1608	1	SA
....4	R4120	2007-000074	R-CHIP;100ohm,5%,1/10W,TP,1608	1	SA
....4	R5010	2007-000074	R-CHIP;100ohm,5%,1/10W,TP,1608	1	SA
....4	R5066	2007-000074	R-CHIP;100ohm,5%,1/10W,TP,1608	1	SA
....4	R5069	2007-000074	R-CHIP;100ohm,5%,1/10W,TP,1608	1	SA
....4	R4121	2007-000075	R-CHIP;220ohm,5%,1/10W,TP,1608	1	SA
....4	R2001	2007-000076	R-CHIP;330ohm,5%,1/10W,TP,1608	1	SA
....4	R2005	2007-000076	R-CHIP;330ohm,5%,1/10W,TP,1608	1	SA
....4	R2035	2007-000076	R-CHIP;330ohm,5%,1/10W,TP,1608	1	SA
....4	R2040	2007-000076	R-CHIP;330ohm,5%,1/10W,TP,1608	1	SA
....4	R1098	2007-000077	R-CHIP;470ohm,5%,1/10W,TP,1608	1	SA
....4	R2004	2007-000077	R-CHIP;470ohm,5%,1/10W,TP,1608	1	SA
....4	R2006	2007-000077	R-CHIP;470ohm,5%,1/10W,TP,1608	1	SA
....4	R2033	2007-000077	R-CHIP;470ohm,5%,1/10W,TP,1608	1	SA
....4	R2034	2007-000077	R-CHIP;470ohm,5%,1/10W,TP,1608	1	SA
....4	R2037	2007-000077	R-CHIP;470ohm,5%,1/10W,TP,1608	1	SA

ELECTRONIC SERVICE TIRGOVISTE

Level	Loc. No.	Code No.	Description & Specification	Q'ty	SA/SNA
....4	R2039	2007-000077	R-CHIP;470ohm,5%,1/10W,TP,1608	1	SA
....4	R2042	2007-000077	R-CHIP;470ohm,5%,1/10W,TP,1608	1	SA
....4	R2043	2007-000077	R-CHIP;470ohm,5%,1/10W,TP,1608	1	SA
....4	R2074	2007-000077	R-CHIP;470ohm,5%,1/10W,TP,1608	1	SA
....4	R2075	2007-000077	R-CHIP;470ohm,5%,1/10W,TP,1608	1	SA
....4	R2077	2007-000077	R-CHIP;470ohm,5%,1/10W,TP,1608	1	SA
....4	R2079	2007-000077	R-CHIP;470ohm,5%,1/10W,TP,1608	1	SA
....4	R3128	2007-000077	R-CHIP;470ohm,5%,1/10W,TP,1608	1	SA
....4	R3133	2007-000077	R-CHIP;470ohm,5%,1/10W,TP,1608	1	SA
....4	R4030	2007-000077	R-CHIP;470ohm,5%,1/10W,TP,1608	1	SA
....4	R4031	2007-000077	R-CHIP;470ohm,5%,1/10W,TP,1608	1	SA
....4	R4099	2007-000077	R-CHIP;470ohm,5%,1/10W,TP,1608	1	SA
....4	R5091	2007-000077	R-CHIP;470ohm,5%,1/10W,TP,1608	1	SA
....4	R5093	2007-000077	R-CHIP;470ohm,5%,1/10W,TP,1608	1	SA
....4	R1074	2007-000078	R-CHIP;1Kohm,5%,1/10W,TP,1608	1	SA
....4	R2009	2007-000078	R-CHIP;1Kohm,5%,1/10W,TP,1608	1	SA
....4	R2016	2007-000078	R-CHIP;1Kohm,5%,1/10W,TP,1608	1	SA
....4	R2096_26	2007-000078	R-CHIP;1Kohm,5%,1/10W,TP,1608	1	SA
....4	R2097_26	2007-000078	R-CHIP;1Kohm,5%,1/10W,TP,1608	1	SA
....4	R3001	2007-000078	R-CHIP;1Kohm,5%,1/10W,TP,1608	1	SA
....4	R3030	2007-000078	R-CHIP;1Kohm,5%,1/10W,TP,1608	1	SA
....4	R3121	2007-000078	R-CHIP;1Kohm,5%,1/10W,TP,1608	1	SA
....4	R3138	2007-000078	R-CHIP;1Kohm,5%,1/10W,TP,1608	1	SA
....4	R3139	2007-000078	R-CHIP;1Kohm,5%,1/10W,TP,1608	1	SA
....4	R4025	2007-000078	R-CHIP;1Kohm,5%,1/10W,TP,1608	1	SA
....4	R4026	2007-000078	R-CHIP;1Kohm,5%,1/10W,TP,1608	1	SA
....4	R4027	2007-000078	R-CHIP;1Kohm,5%,1/10W,TP,1608	1	SA
....4	R4034	2007-000078	R-CHIP;1Kohm,5%,1/10W,TP,1608	1	SA
....4	R4053	2007-000078	R-CHIP;1Kohm,5%,1/10W,TP,1608	1	SA
....4	R4096	2007-000078	R-CHIP;1Kohm,5%,1/10W,TP,1608	1	SA
....4	R4103	2007-000078	R-CHIP;1Kohm,5%,1/10W,TP,1608	1	SA
....4	R5043	2007-000078	R-CHIP;1Kohm,5%,1/10W,TP,1608	1	SA
....4	R3016	2007-000082	R-CHIP;3.3Kohm,5%,1/10W,TP,1608	1	SA
....4	R3017	2007-000082	R-CHIP;3.3Kohm,5%,1/10W,TP,1608	1	SA
....4	R3071	2007-000082	R-CHIP;3.3Kohm,5%,1/10W,TP,1608	1	SA
....4	R3072	2007-000082	R-CHIP;3.3Kohm,5%,1/10W,TP,1608	1	SA
....4	R4100	2007-000082	R-CHIP;3.3Kohm,5%,1/10W,TP,1608	1	SA
....4	R4101	2007-000082	R-CHIP;3.3Kohm,5%,1/10W,TP,1608	1	SA
....4	R1031	2007-000084	R-CHIP;4.7Kohm,5%,1/10W,TP,1608	1	SA
....4	R1035	2007-000084	R-CHIP;4.7Kohm,5%,1/10W,TP,1608	1	SA
....4	R1058	2007-000084	R-CHIP;4.7Kohm,5%,1/10W,TP,1608	1	SA
....4	R1060	2007-000084	R-CHIP;4.7Kohm,5%,1/10W,TP,1608	1	SA
....4	R1082	2007-000084	R-CHIP;4.7Kohm,5%,1/10W,TP,1608	1	SA
....4	R3002	2007-000084	R-CHIP;4.7Kohm,5%,1/10W,TP,1608	1	SA
....4	R3014	2007-000084	R-CHIP;4.7Kohm,5%,1/10W,TP,1608	1	SA
....4	R3015	2007-000084	R-CHIP;4.7Kohm,5%,1/10W,TP,1608	1	SA
....4	R3018	2007-000084	R-CHIP;4.7Kohm,5%,1/10W,TP,1608	1	SA
....4	R3020	2007-000084	R-CHIP;4.7Kohm,5%,1/10W,TP,1608	1	SA
....4	R3021	2007-000084	R-CHIP;4.7Kohm,5%,1/10W,TP,1608	1	SA
....4	R3022	2007-000084	R-CHIP;4.7Kohm,5%,1/10W,TP,1608	1	SA
....4	R3036	2007-000084	R-CHIP;4.7Kohm,5%,1/10W,TP,1608	1	SA
....4	R3038	2007-000084	R-CHIP;4.7Kohm,5%,1/10W,TP,1608	1	SA
....4	R3070	2007-000084	R-CHIP;4.7Kohm,5%,1/10W,TP,1608	1	SA
....4	R3079	2007-000084	R-CHIP;4.7Kohm,5%,1/10W,TP,1608	1	SA
....4	R3080	2007-000084	R-CHIP;4.7Kohm,5%,1/10W,TP,1608	1	SA
....4	R3081	2007-000084	R-CHIP;4.7Kohm,5%,1/10W,TP,1608	1	SA
....4	R3082	2007-000084	R-CHIP;4.7Kohm,5%,1/10W,TP,1608	1	SA
....4	R3086	2007-000084	R-CHIP;4.7Kohm,5%,1/10W,TP,1608	1	SA
....4	R3087	2007-000084	R-CHIP;4.7Kohm,5%,1/10W,TP,1608	1	SA
....4	R3108	2007-000084	R-CHIP;4.7Kohm,5%,1/10W,TP,1608	1	SA

ELECTRONIC SERVICE TIRGOVISTE

Level	Loc. No.	Code No.	Description & Specification	Q'ty	SA/SNA
....4	R3109	2007-000084	R-CHIP;4.7Kohm,5%,1/10W,TP,1608	1	SA
....4	R3110	2007-000084	R-CHIP;4.7Kohm,5%,1/10W,TP,1608	1	SA
....4	R3111	2007-000084	R-CHIP;4.7Kohm,5%,1/10W,TP,1608	1	SA
....4	R3112	2007-000084	R-CHIP;4.7Kohm,5%,1/10W,TP,1608	1	SA
....4	R3113	2007-000084	R-CHIP;4.7Kohm,5%,1/10W,TP,1608	1	SA
....4	R3114	2007-000084	R-CHIP;4.7Kohm,5%,1/10W,TP,1608	1	SA
....4	R3116	2007-000084	R-CHIP;4.7Kohm,5%,1/10W,TP,1608	1	SA
....4	R3129	2007-000084	R-CHIP;4.7Kohm,5%,1/10W,TP,1608	1	SA
....4	R3134	2007-000084	R-CHIP;4.7Kohm,5%,1/10W,TP,1608	1	SA
....4	R3137	2007-000084	R-CHIP;4.7Kohm,5%,1/10W,TP,1608	1	SA
....4	R4036	2007-000084	R-CHIP;4.7Kohm,5%,1/10W,TP,1608	1	SA
....4	R4037	2007-000084	R-CHIP;4.7Kohm,5%,1/10W,TP,1608	1	SA
....4	R4098	2007-000084	R-CHIP;4.7Kohm,5%,1/10W,TP,1608	1	SA
....4	R4123	2007-000084	R-CHIP;4.7Kohm,5%,1/10W,TP,1608	1	SA
....4	R5064	2007-000084	R-CHIP;4.7Kohm,5%,1/10W,TP,1608	1	SA
....4	R5119	2007-000084	R-CHIP;4.7Kohm,5%,1/10W,TP,1608	1	SA
....4	R2028	2007-000087	R-CHIP;6.8Kohm,5%,1/10W,TP,1608	1	SA
....4	R2061	2007-000087	R-CHIP;6.8Kohm,5%,1/10W,TP,1608	1	SA
....4	R1015	2007-000090	R-CHIP;10Kohm,5%,1/10W,TP,1608	1	SA
....4	R1016	2007-000090	R-CHIP;10Kohm,5%,1/10W,TP,1608	1	SA
....4	R1038	2007-000090	R-CHIP;10Kohm,5%,1/10W,TP,1608	1	SA
....4	R1039	2007-000090	R-CHIP;10Kohm,5%,1/10W,TP,1608	1	SA
....4	R1041	2007-000090	R-CHIP;10Kohm,5%,1/10W,TP,1608	1	SA
....4	R1051	2007-000090	R-CHIP;10Kohm,5%,1/10W,TP,1608	1	SA
....4	R1067	2007-000090	R-CHIP;10Kohm,5%,1/10W,TP,1608	1	SA
....4	R1080	2007-000090	R-CHIP;10Kohm,5%,1/10W,TP,1608	1	SA
....4	R1101	2007-000090	R-CHIP;10Kohm,5%,1/10W,TP,1608	1	SA
....4	R1102	2007-000090	R-CHIP;10Kohm,5%,1/10W,TP,1608	1	SA
....4	R1103	2007-000090	R-CHIP;10Kohm,5%,1/10W,TP,1608	1	SA
....4	R1104	2007-000090	R-CHIP;10Kohm,5%,1/10W,TP,1608	1	SA
....4	R1105	2007-000090	R-CHIP;10Kohm,5%,1/10W,TP,1608	1	SA
....4	R2002	2007-000090	R-CHIP;10Kohm,5%,1/10W,TP,1608	1	SA
....4	R2003	2007-000090	R-CHIP;10Kohm,5%,1/10W,TP,1608	1	SA
....4	R2013	2007-000090	R-CHIP;10Kohm,5%,1/10W,TP,1608	1	SA
....4	R2044	2007-000090	R-CHIP;10Kohm,5%,1/10W,TP,1608	1	SA
....4	R2045	2007-000090	R-CHIP;10Kohm,5%,1/10W,TP,1608	1	SA
....4	R2057	2007-000090	R-CHIP;10Kohm,5%,1/10W,TP,1608	1	SA
....4	R2065	2007-000090	R-CHIP;10Kohm,5%,1/10W,TP,1608	1	SA
....4	R3005	2007-000090	R-CHIP;10Kohm,5%,1/10W,TP,1608	1	SA
....4	R3006	2007-000090	R-CHIP;10Kohm,5%,1/10W,TP,1608	1	SA
....4	R3007	2007-000090	R-CHIP;10Kohm,5%,1/10W,TP,1608	1	SA
....4	R3075	2007-000090	R-CHIP;10Kohm,5%,1/10W,TP,1608	1	SA
....4	R3076	2007-000090	R-CHIP;10Kohm,5%,1/10W,TP,1608	1	SA
....4	R3083	2007-000090	R-CHIP;10Kohm,5%,1/10W,TP,1608	1	SA
....4	R3084	2007-000090	R-CHIP;10Kohm,5%,1/10W,TP,1608	1	SA
....4	R3085	2007-000090	R-CHIP;10Kohm,5%,1/10W,TP,1608	1	SA
....4	R3131	2007-000090	R-CHIP;10Kohm,5%,1/10W,TP,1608	1	SA
....4	R3140	2007-000090	R-CHIP;10Kohm,5%,1/10W,TP,1608	1	SA
....4	R4118	2007-000090	R-CHIP;10Kohm,5%,1/10W,TP,1608	1	SA
....4	R4119	2007-000090	R-CHIP;10Kohm,5%,1/10W,TP,1608	1	SA
....4	R5004	2007-000090	R-CHIP;10Kohm,5%,1/10W,TP,1608	1	SA
....4	R5044	2007-000090	R-CHIP;10Kohm,5%,1/10W,TP,1608	1	SA
....4	R1070	2007-000093	R-CHIP;20Kohm,5%,1/10W,TP,1608	1	SA
....4	R1071	2007-000093	R-CHIP;20Kohm,5%,1/10W,TP,1608	1	SA
....4	R3004	2007-000094	R-CHIP;22Kohm,5%,1/10W,TP,1608	1	SA
....4	R1062	2007-000097	R-CHIP;47Kohm,5%,1/10W,TP,1608	1	SA
....4	R1068	2007-000097	R-CHIP;47Kohm,5%,1/10W,TP,1608	1	SA
....4	R1075	2007-000097	R-CHIP;47Kohm,5%,1/10W,TP,1608	1	SA
....4	R1079	2007-000097	R-CHIP;47Kohm,5%,1/10W,TP,1608	1	SA
....4	R2010	2007-000097	R-CHIP;47Kohm,5%,1/10W,TP,1608	1	SA

ELECTRONIC SERVICE TIRGOVISTE

Level	Loc. No.	Code No.	Description & Specification	Q'ty	SA/SNA
....4	R2011	2007-000097	R-CHIP;47Kohm,5%,1/10W,TP,1608	1	SA
....4	R2012	2007-000097	R-CHIP;47Kohm,5%,1/10W,TP,1608	1	SA
....4	R3099	2007-000097	R-CHIP;47Kohm,5%,1/10W,TP,1608	1	SA
....4	R4124_26	2007-000097	R-CHIP;47Kohm,5%,1/10W,TP,1608	1	SA
....4	R1001	2007-000100	R-CHIP;68Kohm,5%,1/10W,TP,1608	1	SA
....4	R1002	2007-000100	R-CHIP;68Kohm,5%,1/10W,TP,1608	1	SA
....4	R1003	2007-000100	R-CHIP;68Kohm,5%,1/10W,TP,1608	1	SA
....4	R1004	2007-000100	R-CHIP;68Kohm,5%,1/10W,TP,1608	1	SA
....4	R1005	2007-000100	R-CHIP;68Kohm,5%,1/10W,TP,1608	1	SA
....4	R1006	2007-000100	R-CHIP;68Kohm,5%,1/10W,TP,1608	1	SA
....4	R1007	2007-000100	R-CHIP;68Kohm,5%,1/10W,TP,1608	1	SA
....4	R1008	2007-000100	R-CHIP;68Kohm,5%,1/10W,TP,1608	1	SA
....4	R1019	2007-000100	R-CHIP;68Kohm,5%,1/10W,TP,1608	1	SA
....4	R1020	2007-000100	R-CHIP;68Kohm,5%,1/10W,TP,1608	1	SA
....4	R1021	2007-000100	R-CHIP;68Kohm,5%,1/10W,TP,1608	1	SA
....4	R1022	2007-000100	R-CHIP;68Kohm,5%,1/10W,TP,1608	1	SA
....4	R1023	2007-000100	R-CHIP;68Kohm,5%,1/10W,TP,1608	1	SA
....4	R1024	2007-000100	R-CHIP;68Kohm,5%,1/10W,TP,1608	1	SA
....4	R1025	2007-000100	R-CHIP;68Kohm,5%,1/10W,TP,1608	1	SA
....4	R1026	2007-000100	R-CHIP;68Kohm,5%,1/10W,TP,1608	1	SA
....4	R1027	2007-000100	R-CHIP;68Kohm,5%,1/10W,TP,1608	1	SA
....4	R1028	2007-000100	R-CHIP;68Kohm,5%,1/10W,TP,1608	1	SA
....4	R1029	2007-000100	R-CHIP;68Kohm,5%,1/10W,TP,1608	1	SA
....4	R1030	2007-000100	R-CHIP;68Kohm,5%,1/10W,TP,1608	1	SA
....4	R1043	2007-000100	R-CHIP;68Kohm,5%,1/10W,TP,1608	1	SA
....4	R1044	2007-000100	R-CHIP;68Kohm,5%,1/10W,TP,1608	1	SA
....4	R1045	2007-000100	R-CHIP;68Kohm,5%,1/10W,TP,1608	1	SA
....4	R1046	2007-000100	R-CHIP;68Kohm,5%,1/10W,TP,1608	1	SA
....4	R1034	2007-000102	R-CHIP;100Kohm,5%,1/10W,TP,1608	1	SA
....4	R1064	2007-000102	R-CHIP;100Kohm,5%,1/10W,TP,1608	1	SA
....4	R1065	2007-000102	R-CHIP;100Kohm,5%,1/10W,TP,1608	1	SA
....4	R1069	2007-000102	R-CHIP;100Kohm,5%,1/10W,TP,1608	1	SA
....4	R1072	2007-000102	R-CHIP;100Kohm,5%,1/10W,TP,1608	1	SA
....4	R1073	2007-000107	R-CHIP;470Kohm,5%,1/10W,TP,1608	1	SA
....4	R4021	2007-000113	R-CHIP;33ohm,5%,1/10W,TP,1608	1	SA
....4	R4022	2007-000113	R-CHIP;33ohm,5%,1/10W,TP,1608	1	SA
....4	R4023	2007-000113	R-CHIP;33ohm,5%,1/10W,TP,1608	1	SA
....4	R4024	2007-000113	R-CHIP;33ohm,5%,1/10W,TP,1608	1	SA
....4	R1036	2007-000119	R-CHIP;560ohm,5%,1/10W,TP,1608	1	SA
....4	R1078	2007-000122	R-CHIP;1.2Kohm,5%,1/10W,TP,1608	1	SA
....4	R5053	2007-000123	R-CHIP;1.5Kohm,5%,1/10W,TP,1608	1	SA
....4	R5054	2007-000123	R-CHIP;1.5Kohm,5%,1/10W,TP,1608	1	SA
....4	R5055	2007-000123	R-CHIP;1.5Kohm,5%,1/10W,TP,1608	1	SA
....4	R1096	2007-000125	R-CHIP;3.9Kohm,5%,1/10W,TP,1608	1	SA
....4	R1076	2007-000129	R-CHIP;27Kohm,5%,1/10W,TP,1608	1	SA
....4	R5015	2007-000133	R-CHIP;330Kohm,5%,1/10W,TP,1608	1	SA
....4	R2119	2007-000287	R-CHIP;100OHM,1%,1/10W,TP,1608	1	SA
....4	R2098	2007-000309	R-CHIP;10ohm,5%,1/10W,TP,1608	1	SA
....4	R2099	2007-000309	R-CHIP;10ohm,5%,1/10W,TP,1608	1	SA
....4	R2100	2007-000309	R-CHIP;10ohm,5%,1/10W,TP,1608	1	SA
....4	R2101	2007-000309	R-CHIP;10ohm,5%,1/10W,TP,1608	1	SA
....4	R2102	2007-000309	R-CHIP;10ohm,5%,1/10W,TP,1608	1	SA
....4	R2103	2007-000309	R-CHIP;10ohm,5%,1/10W,TP,1608	1	SA
....4	R2104	2007-000309	R-CHIP;10ohm,5%,1/10W,TP,1608	1	SA
....4	R2105	2007-000309	R-CHIP;10ohm,5%,1/10W,TP,1608	1	SA
....4	R3044	2007-000309	R-CHIP;10ohm,5%,1/10W,TP,1608	1	SA
....4	R3048	2007-000309	R-CHIP;10ohm,5%,1/10W,TP,1608	1	SA
....4	R3049_1M	2007-000309	R-CHIP;10ohm,5%,1/10W,TP,1608	1	SA
....4	R3050_1M	2007-000309	R-CHIP;10ohm,5%,1/10W,TP,1608	1	SA
....4	R3056	2007-000309	R-CHIP;10ohm,5%,1/10W,TP,1608	1	SA

ELECTRONIC SERVICE TIRGOVISTE

Level	Loc. No.	Code No.	Description & Specification	Q'ty	SA/SNA
....4	R3060	2007-000309	R-CHIP;10ohm,5%,1/10W,TP,1608	1	SA
....4	R3061	2007-000309	R-CHIP;10ohm,5%,1/10W,TP,1608	1	SA
....4	R3064	2007-000309	R-CHIP;10ohm,5%,1/10W,TP,1608	1	SA
....4	R3066	2007-000309	R-CHIP;10ohm,5%,1/10W,TP,1608	1	SA
....4	R3067	2007-000309	R-CHIP;10ohm,5%,1/10W,TP,1608	1	SA
....4	R3068	2007-000309	R-CHIP;10ohm,5%,1/10W,TP,1608	1	SA
....4	R3069	2007-000309	R-CHIP;10ohm,5%,1/10W,TP,1608	1	SA
....4	R3091	2007-000309	R-CHIP;10ohm,5%,1/10W,TP,1608	1	SA
....4	R3092	2007-000309	R-CHIP;10ohm,5%,1/10W,TP,1608	1	SA
....4	R3093	2007-000309	R-CHIP;10ohm,5%,1/10W,TP,1608	1	SA
....4	R3094	2007-000309	R-CHIP;10ohm,5%,1/10W,TP,1608	1	SA
....4	R3095	2007-000309	R-CHIP;10ohm,5%,1/10W,TP,1608	1	SA
....4	R3096	2007-000309	R-CHIP;10ohm,5%,1/10W,TP,1608	1	SA
....4	R3097	2007-000309	R-CHIP;10ohm,5%,1/10W,TP,1608	1	SA
....4	R3098	2007-000309	R-CHIP;10ohm,5%,1/10W,TP,1608	1	SA
....4	R5045	2007-000309	R-CHIP;10ohm,5%,1/10W,TP,1608	1	SA
....4	R5046	2007-000309	R-CHIP;10ohm,5%,1/10W,TP,1608	1	SA
....4	R5047	2007-000309	R-CHIP;10ohm,5%,1/10W,TP,1608	1	SA
....4	R2017	2007-000458	R-CHIP;18Kohm,5%,1/10W,TP,1608	1	SA
....4	R2052	2007-000458	R-CHIP;18Kohm,5%,1/10W,TP,1608	1	SA
....4	R3012	2007-000704	R-CHIP;3.6Kohm,5%,1/10W,TP,1608	1	SA
....4	R3013	2007-000704	R-CHIP;3.6Kohm,5%,1/10W,TP,1608	1	SA
....4	R1077	2007-000708	R-CHIP;3.9Kohm,1%,1/10W,TP,1608	1	SA
....4	R4122	2007-000903	R-CHIP;430ohm,1%,1/10W,TP,1608	1	SA
....4	R2019	2007-000950	R-CHIP;47ohm,5%,1/4W,TP,3216	1	SA
....4	R2020	2007-000950	R-CHIP;47ohm,5%,1/4W,TP,3216	1	SA
....4	R2021	2007-000950	R-CHIP;47ohm,5%,1/4W,TP,3216	1	SA
....4	R2066	2007-000950	R-CHIP;47ohm,5%,1/4W,TP,3216	1	SA
....4	R2067	2007-000950	R-CHIP;47ohm,5%,1/4W,TP,3216	1	SA
....4	R2076	2007-000950	R-CHIP;47ohm,5%,1/4W,TP,3216	1	SA
....4	R2078	2007-000950	R-CHIP;47ohm,5%,1/4W,TP,3216	1	SA
....4	R2082	2007-000950	R-CHIP;47ohm,5%,1/4W,TP,3216	1	SA
....4	R2083	2007-000950	R-CHIP;47ohm,5%,1/4W,TP,3216	1	SA
....4	R2094	2007-000950	R-CHIP;47ohm,5%,1/4W,TP,3216	1	SA
....4	R2095	2007-000950	R-CHIP;47ohm,5%,1/4W,TP,3216	1	SA
....4	R5035	2007-001014	R-CHIP;51OHM,5%,1/10W,TP,1608	1	SA
....4	R5039	2007-001014	R-CHIP;51OHM,5%,1/10W,TP,1608	1	SA
....4	R2030	2007-001131	R-CHIP;68ohm,1%,1/10W,TP,1608	1	SA
....4	R2056	2007-001131	R-CHIP;68ohm,1%,1/10W,TP,1608	1	SA
....4	R2014	2007-001164	R-CHIP;75ohm,1%,1/10W,TP,1608	1	SA
....4	R2015	2007-001164	R-CHIP;75ohm,1%,1/10W,TP,1608	1	SA
....4	R2025	2007-001164	R-CHIP;75ohm,1%,1/10W,TP,1608	1	SA
....4	R2026	2007-001164	R-CHIP;75ohm,1%,1/10W,TP,1608	1	SA
....4	R2027	2007-001164	R-CHIP;75ohm,1%,1/10W,TP,1608	1	SA
....4	R2032	2007-001164	R-CHIP;75ohm,1%,1/10W,TP,1608	1	SA
....4	R2062	2007-001164	R-CHIP;75ohm,1%,1/10W,TP,1608	1	SA
....4	R2072_26	2007-001164	R-CHIP;75ohm,1%,1/10W,TP,1608	1	SA
....4	R2073_26	2007-001164	R-CHIP;75ohm,1%,1/10W,TP,1608	1	SA
....4	R2085	2007-001164	R-CHIP;75ohm,1%,1/10W,TP,1608	1	SA
....4	R2086	2007-001164	R-CHIP;75ohm,1%,1/10W,TP,1608	1	SA
....4	R2087	2007-001164	R-CHIP;75ohm,1%,1/10W,TP,1608	1	SA
....4	R2092_26	2007-001164	R-CHIP;75ohm,1%,1/10W,TP,1608	1	SA
....4	R2036	2007-001167	R-CHIP;75ohm,5%,1/10W,TP,1608	1	SA
....4	R2038	2007-001167	R-CHIP;75ohm,5%,1/10W,TP,1608	1	SA
....4	R2041	2007-001167	R-CHIP;75ohm,5%,1/10W,TP,1608	1	SA
....4	R2046	2007-001167	R-CHIP;75ohm,5%,1/10W,TP,1608	1	SA
....4	R2047	2007-001167	R-CHIP;75ohm,5%,1/10W,TP,1608	1	SA
....4	R2048	2007-001167	R-CHIP;75ohm,5%,1/10W,TP,1608	1	SA
....4	R2054	2007-001167	R-CHIP;75ohm,5%,1/10W,TP,1608	1	SA
....4	R2059	2007-001167	R-CHIP;75ohm,5%,1/10W,TP,1608	1	SA

ELECTRONIC SERVICE TARGOVISTE

Level	Loc. No.	Code No.	Description & Specification	Q'ty	SA/SNA
....4	R5016	2007-001167	R-CHIP;75ohm,5%,1/10W,TP,1608	1	SA
....4	R1057	2007-007299	R-CHIP;6.81Kohm,1%,1/10W,TP,1608	1	SA
....4	R2118	2007-007733	R-CHIP;51ohm,1%,1/10W,TP,1608	1	SA
....4	R1083	2007-008720	R-CHIP;4.7ohm,1%,1/4W,TP,3216	1	SA
....4	R1088	2007-008720	R-CHIP;4.7ohm,1%,1/4W,TP,3216	1	SA
....4	R1094	2007-008720	R-CHIP;4.7ohm,1%,1/4W,TP,3216	1	SA
....4	R1097	2007-008720	R-CHIP;4.7ohm,1%,1/4W,TP,3216	1	SA
....4	RA5001	2011-000585	R-NET;47ohm,5%,1/16W,L,CHIP,8P,TP,3.2x1.	1	SA
....4	RA5002	2011-000585	R-NET;47ohm,5%,1/16W,L,CHIP,8P,TP,3.2x1.	1	SA
....4	RA5003	2011-000585	R-NET;47ohm,5%,1/16W,L,CHIP,8P,TP,3.2x1.	1	SA
....4	RA5004	2011-000585	R-NET;47ohm,5%,1/16W,L,CHIP,8P,TP,3.2x1.	1	SA
....4	RA5005	2011-000585	R-NET;47ohm,5%,1/16W,L,CHIP,8P,TP,3.2x1.	1	SA
....4	RA5006	2011-000585	R-NET;47ohm,5%,1/16W,L,CHIP,8P,TP,3.2x1.	1	SA
....4	RA5007	2011-000585	R-NET;47ohm,5%,1/16W,L,CHIP,8P,TP,3.2x1.	1	SA
....4	RA5010	2011-000585	R-NET;47ohm,5%,1/16W,L,CHIP,8P,TP,3.2x1.	1	SA
....4	RA3004	2011-000651	R-NET;10ohm,5%,1/16W,L,CHIP,8P,TP,3216	1	SA
....4	RA3005	2011-000651	R-NET;10ohm,5%,1/16W,L,CHIP,8P,TP,3216	1	SA
....4	RA3007	2011-000651	R-NET;10ohm,5%,1/16W,L,CHIP,8P,TP,3216	1	SA
....4	RA3008	2011-000651	R-NET;10ohm,5%,1/16W,L,CHIP,8P,TP,3216	1	SA
....4	RA3009	2011-000651	R-NET;10ohm,5%,1/16W,L,CHIP,8P,TP,3216	1	SA
....4	RA3011	2011-000651	R-NET;10ohm,5%,1/16W,L,CHIP,8P,TP,3216	1	SA
....4	RA3001	2011-001093	R-NET;100OHM,5%,1/16W,L,CHIP,8P,TP,3216	1	SA
....4	RA3002	2011-001093	R-NET;100OHM,5%,1/16W,L,CHIP,8P,TP,3216	1	SA
....4	RA3003	2011-001093	R-NET;100OHM,5%,1/16W,L,CHIP,8P,TP,3216	1	SA
....4	RA3006	2011-001093	R-NET;100OHM,5%,1/16W,L,CHIP,8P,TP,3216	1	SA
....4	RA3010	2011-001093	R-NET;100OHM,5%,1/16W,L,CHIP,8P,TP,3216	1	SA
....4	RA3012	2011-001093	R-NET;100OHM,5%,1/16W,L,CHIP,8P,TP,3216	1	SA
....4	RA3013	2011-001093	R-NET;100OHM,5%,1/16W,L,CHIP,8P,TP,3216	1	SA
....4	RA3014	2011-001093	R-NET;100OHM,5%,1/16W,L,CHIP,8P,TP,3216	1	SA
....4	RA3015	2011-001093	R-NET;100OHM,5%,1/16W,L,CHIP,8P,TP,3216	1	SA
....4	RA3016	2011-001093	R-NET;100OHM,5%,1/16W,L,CHIP,8P,TP,3216	1	SA
....4	RA3017	2011-001093	R-NET;100OHM,5%,1/16W,L,CHIP,8P,TP,3216	1	SA
....4	RA3018	2011-001093	R-NET;100OHM,5%,1/16W,L,CHIP,8P,TP,3216	1	SA
....4	RA3019	2011-001093	R-NET;100OHM,5%,1/16W,L,CHIP,8P,TP,3216	1	SA
....4	RA3020	2011-001093	R-NET;100OHM,5%,1/16W,L,CHIP,8P,TP,3216	1	SA
....4	RA4001	2011-001093	R-NET;100OHM,5%,1/16W,L,CHIP,8P,TP,3216	1	SA
....4	RA4002	2011-001093	R-NET;100OHM,5%,1/16W,L,CHIP,8P,TP,3216	1	SA
....4	C1158	2203-000125	C-CER,CHIP;1.2nF,10%,50V,X7R,TP,1608,-	1	SA
....4	C1037	2203-000140	C-CER,CHIP;1.5nF,10%,50V,X7R,1608	1	SA
....4	C1062	2203-000140	C-CER,CHIP;1.5nF,10%,50V,X7R,1608	1	SA
....4	C1004	2203-000189	C-CER,CHIP;100nF,+80-20%,25V,Y5V,1608	1	SA
....4	C1006	2203-000189	C-CER,CHIP;100nF,+80-20%,25V,Y5V,1608	1	SA
....4	C1008	2203-000189	C-CER,CHIP;100nF,+80-20%,25V,Y5V,1608	1	SA
....4	C1016	2203-000189	C-CER,CHIP;100nF,+80-20%,25V,Y5V,1608	1	SA
....4	C1021	2203-000189	C-CER,CHIP;100nF,+80-20%,25V,Y5V,1608	1	SA
....4	C1025	2203-000189	C-CER,CHIP;100nF,+80-20%,25V,Y5V,1608	1	SA
....4	C1027	2203-000189	C-CER,CHIP;100nF,+80-20%,25V,Y5V,1608	1	SA
....4	C1043	2203-000189	C-CER,CHIP;100nF,+80-20%,25V,Y5V,1608	1	SA
....4	C1046	2203-000189	C-CER,CHIP;100nF,+80-20%,25V,Y5V,1608	1	SA
....4	C1052	2203-000189	C-CER,CHIP;100nF,+80-20%,25V,Y5V,1608	1	SA
....4	C1053	2203-000189	C-CER,CHIP;100nF,+80-20%,25V,Y5V,1608	1	SA
....4	C1054	2203-000189	C-CER,CHIP;100nF,+80-20%,25V,Y5V,1608	1	SA
....4	C1055	2203-000189	C-CER,CHIP;100nF,+80-20%,25V,Y5V,1608	1	SA
....4	C1075	2203-000189	C-CER,CHIP;100nF,+80-20%,25V,Y5V,1608	1	SA
....4	C1084	2203-000189	C-CER,CHIP;100nF,+80-20%,25V,Y5V,1608	1	SA
....4	C1086	2203-000189	C-CER,CHIP;100nF,+80-20%,25V,Y5V,1608	1	SA
....4	C1087	2203-000189	C-CER,CHIP;100nF,+80-20%,25V,Y5V,1608	1	SA
....4	C1097	2203-000189	C-CER,CHIP;100nF,+80-20%,25V,Y5V,1608	1	SA
....4	C1098	2203-000189	C-CER,CHIP;100nF,+80-20%,25V,Y5V,1608	1	SA
....4	C1103	2203-000189	C-CER,CHIP;100nF,+80-20%,25V,Y5V,1608	1	SA

ELECTRONIC SERVICE TIRGOVISTE

Level	Loc. No.	Code No.	Description & Specification	Q'ty	SA/SNA
....4	C1105	2203-000189	C-CER,CHIP;100nF,+80-20%,25V,Y5V,1608	1	SA
....4	C1109	2203-000189	C-CER,CHIP;100nF,+80-20%,25V,Y5V,1608	1	SA
....4	C1124	2203-000189	C-CER,CHIP;100nF,+80-20%,25V,Y5V,1608	1	SA
....4	C1132	2203-000189	C-CER,CHIP;100nF,+80-20%,25V,Y5V,1608	1	SA
....4	C1133	2203-000189	C-CER,CHIP;100nF,+80-20%,25V,Y5V,1608	1	SA
....4	C1141	2203-000189	C-CER,CHIP;100nF,+80-20%,25V,Y5V,1608	1	SA
....4	C1159	2203-000189	C-CER,CHIP;100nF,+80-20%,25V,Y5V,1608	1	SA
....4	C1168	2203-000189	C-CER,CHIP;100nF,+80-20%,25V,Y5V,1608	1	SA
....4	C2002	2203-000189	C-CER,CHIP;100nF,+80-20%,25V,Y5V,1608	1	SA
....4	C2018	2203-000189	C-CER,CHIP;100nF,+80-20%,25V,Y5V,1608	1	SA
....4	C3001	2203-000189	C-CER,CHIP;100nF,+80-20%,25V,Y5V,1608	1	SA
....4	C3005	2203-000189	C-CER,CHIP;100nF,+80-20%,25V,Y5V,1608	1	SA
....4	C3034	2203-000189	C-CER,CHIP;100nF,+80-20%,25V,Y5V,1608	1	SA
....4	C4016	2203-000189	C-CER,CHIP;100nF,+80-20%,25V,Y5V,1608	1	SA
....4	C4017	2203-000189	C-CER,CHIP;100nF,+80-20%,25V,Y5V,1608	1	SA
....4	C4018	2203-000189	C-CER,CHIP;100nF,+80-20%,25V,Y5V,1608	1	SA
....4	C4019	2203-000189	C-CER,CHIP;100nF,+80-20%,25V,Y5V,1608	1	SA
....4	C4020	2203-000189	C-CER,CHIP;100nF,+80-20%,25V,Y5V,1608	1	SA
....4	C4021	2203-000189	C-CER,CHIP;100nF,+80-20%,25V,Y5V,1608	1	SA
....4	C4022	2203-000189	C-CER,CHIP;100nF,+80-20%,25V,Y5V,1608	1	SA
....4	C4025	2203-000189	C-CER,CHIP;100nF,+80-20%,25V,Y5V,1608	1	SA
....4	C4026	2203-000189	C-CER,CHIP;100nF,+80-20%,25V,Y5V,1608	1	SA
....4	C4027	2203-000189	C-CER,CHIP;100nF,+80-20%,25V,Y5V,1608	1	SA
....4	C4028	2203-000189	C-CER,CHIP;100nF,+80-20%,25V,Y5V,1608	1	SA
....4	C4029	2203-000189	C-CER,CHIP;100nF,+80-20%,25V,Y5V,1608	1	SA
....4	C4031	2203-000189	C-CER,CHIP;100nF,+80-20%,25V,Y5V,1608	1	SA
....4	C4032	2203-000189	C-CER,CHIP;100nF,+80-20%,25V,Y5V,1608	1	SA
....4	C4034	2203-000189	C-CER,CHIP;100nF,+80-20%,25V,Y5V,1608	1	SA
....4	C4035	2203-000189	C-CER,CHIP;100nF,+80-20%,25V,Y5V,1608	1	SA
....4	C4036	2203-000189	C-CER,CHIP;100nF,+80-20%,25V,Y5V,1608	1	SA
....4	C4038	2203-000189	C-CER,CHIP;100nF,+80-20%,25V,Y5V,1608	1	SA
....4	C4039	2203-000189	C-CER,CHIP;100nF,+80-20%,25V,Y5V,1608	1	SA
....4	C4040	2203-000189	C-CER,CHIP;100nF,+80-20%,25V,Y5V,1608	1	SA
....4	C4041	2203-000189	C-CER,CHIP;100nF,+80-20%,25V,Y5V,1608	1	SA
....4	C4042	2203-000189	C-CER,CHIP;100nF,+80-20%,25V,Y5V,1608	1	SA
....4	C4043	2203-000189	C-CER,CHIP;100nF,+80-20%,25V,Y5V,1608	1	SA
....4	C4045	2203-000189	C-CER,CHIP;100nF,+80-20%,25V,Y5V,1608	1	SA
....4	C4046	2203-000189	C-CER,CHIP;100nF,+80-20%,25V,Y5V,1608	1	SA
....4	C4048	2203-000189	C-CER,CHIP;100nF,+80-20%,25V,Y5V,1608	1	SA
....4	C4049	2203-000189	C-CER,CHIP;100nF,+80-20%,25V,Y5V,1608	1	SA
....4	C4052	2203-000189	C-CER,CHIP;100nF,+80-20%,25V,Y5V,1608	1	SA
....4	C4053	2203-000189	C-CER,CHIP;100nF,+80-20%,25V,Y5V,1608	1	SA
....4	C4054	2203-000189	C-CER,CHIP;100nF,+80-20%,25V,Y5V,1608	1	SA
....4	C4055	2203-000189	C-CER,CHIP;100nF,+80-20%,25V,Y5V,1608	1	SA
....4	C4056	2203-000189	C-CER,CHIP;100nF,+80-20%,25V,Y5V,1608	1	SA
....4	C4059	2203-000189	C-CER,CHIP;100nF,+80-20%,25V,Y5V,1608	1	SA
....4	C4060	2203-000189	C-CER,CHIP;100nF,+80-20%,25V,Y5V,1608	1	SA
....4	C4061	2203-000189	C-CER,CHIP;100nF,+80-20%,25V,Y5V,1608	1	SA
....4	C4062	2203-000189	C-CER,CHIP;100nF,+80-20%,25V,Y5V,1608	1	SA
....4	C4063	2203-000189	C-CER,CHIP;100nF,+80-20%,25V,Y5V,1608	1	SA
....4	C4067	2203-000189	C-CER,CHIP;100nF,+80-20%,25V,Y5V,1608	1	SA
....4	C4068	2203-000189	C-CER,CHIP;100nF,+80-20%,25V,Y5V,1608	1	SA
....4	C4069	2203-000189	C-CER,CHIP;100nF,+80-20%,25V,Y5V,1608	1	SA
....4	C4070	2203-000189	C-CER,CHIP;100nF,+80-20%,25V,Y5V,1608	1	SA
....4	C4071	2203-000189	C-CER,CHIP;100nF,+80-20%,25V,Y5V,1608	1	SA
....4	C4073	2203-000189	C-CER,CHIP;100nF,+80-20%,25V,Y5V,1608	1	SA
....4	C4076	2203-000189	C-CER,CHIP;100nF,+80-20%,25V,Y5V,1608	1	SA
....4	C4077	2203-000189	C-CER,CHIP;100nF,+80-20%,25V,Y5V,1608	1	SA
....4	C4080	2203-000189	C-CER,CHIP;100nF,+80-20%,25V,Y5V,1608	1	SA
....4	C4081	2203-000189	C-CER,CHIP;100nF,+80-20%,25V,Y5V,1608	1	SA

ELECTRONIC SERVICE TIRGOVISTE

Level	Loc. No.	Code No.	Description & Specification	Q'ty	SA/SNA
....4	C4083	2203-000189	C-CER,CHIP;100nF,+80-20%,25V,Y5V,1608	1	SA
....4	C4084	2203-000189	C-CER,CHIP;100nF,+80-20%,25V,Y5V,1608	1	SA
....4	C4085	2203-000189	C-CER,CHIP;100nF,+80-20%,25V,Y5V,1608	1	SA
....4	C4086	2203-000189	C-CER,CHIP;100nF,+80-20%,25V,Y5V,1608	1	SA
....4	C4095	2203-000189	C-CER,CHIP;100nF,+80-20%,25V,Y5V,1608	1	SA
....4	C4128	2203-000189	C-CER,CHIP;100nF,+80-20%,25V,Y5V,1608	1	SA
....4	C5026	2203-000189	C-CER,CHIP;100nF,+80-20%,25V,Y5V,1608	1	SA
....4	C5038	2203-000189	C-CER,CHIP;100nF,+80-20%,25V,Y5V,1608	1	SA
....4	C5043	2203-000189	C-CER,CHIP;100nF,+80-20%,25V,Y5V,1608	1	SA
....4	C5022	2203-000221	C-CER,CHIP;100nF,20%,50V,Y5V,TP,3216	1	SA
....4	C1050	2203-000236	C-CER,CHIP;0.1nF,5%,50V,C0G,1608	1	SA
....4	C1134	2203-000236	C-CER,CHIP;0.1nF,5%,50V,C0G,1608	1	SA
....4	C1135	2203-000236	C-CER,CHIP;0.1nF,5%,50V,C0G,1608	1	SA
....4	C1161	2203-000236	C-CER,CHIP;0.1nF,5%,50V,C0G,1608	1	SA
....4	C1162	2203-000236	C-CER,CHIP;0.1nF,5%,50V,C0G,1608	1	SA
....4	C1163	2203-000236	C-CER,CHIP;0.1nF,5%,50V,C0G,1608	1	SA
....4	C2003	2203-000236	C-CER,CHIP;0.1nF,5%,50V,C0G,1608	1	SA
....4	C2004	2203-000236	C-CER,CHIP;0.1nF,5%,50V,C0G,1608	1	SA
....4	C2005	2203-000236	C-CER,CHIP;0.1nF,5%,50V,C0G,1608	1	SA
....4	C2006	2203-000236	C-CER,CHIP;0.1nF,5%,50V,C0G,1608	1	SA
....4	C2007	2203-000236	C-CER,CHIP;0.1nF,5%,50V,C0G,1608	1	SA
....4	C2011	2203-000236	C-CER,CHIP;0.1nF,5%,50V,C0G,1608	1	SA
....4	C2012	2203-000236	C-CER,CHIP;0.1nF,5%,50V,C0G,1608	1	SA
....4	C2013	2203-000236	C-CER,CHIP;0.1nF,5%,50V,C0G,1608	1	SA
....4	C2014	2203-000236	C-CER,CHIP;0.1nF,5%,50V,C0G,1608	1	SA
....4	C2019	2203-000236	C-CER,CHIP;0.1nF,5%,50V,C0G,1608	1	SA
....4	C2020	2203-000236	C-CER,CHIP;0.1nF,5%,50V,C0G,1608	1	SA
....4	C2022_DE	2203-000236	C-CER,CHIP;0.1nF,5%,50V,C0G,1608	1	SA
....4	C2023	2203-000236	C-CER,CHIP;0.1nF,5%,50V,C0G,1608	1	SA
....4	C2024	2203-000236	C-CER,CHIP;0.1nF,5%,50V,C0G,1608	1	SA
....4	C2025	2203-000236	C-CER,CHIP;0.1nF,5%,50V,C0G,1608	1	SA
....4	C2027	2203-000236	C-CER,CHIP;0.1nF,5%,50V,C0G,1608	1	SA
....4	C2028	2203-000236	C-CER,CHIP;0.1nF,5%,50V,C0G,1608	1	SA
....4	C2032	2203-000236	C-CER,CHIP;0.1nF,5%,50V,C0G,1608	1	SA
....4	C3024	2203-000236	C-CER,CHIP;0.1nF,5%,50V,C0G,1608	1	SA
....4	C3025	2203-000236	C-CER,CHIP;0.1nF,5%,50V,C0G,1608	1	SA
....4	C5059	2203-000236	C-CER,CHIP;0.1nF,5%,50V,C0G,1608	1	SA
....4	C5068	2203-000236	C-CER,CHIP;0.1nF,5%,50V,C0G,1608	1	SA
....4	C5069	2203-000236	C-CER,CHIP;0.1nF,5%,50V,C0G,1608	1	SA
....4	C5084	2203-000236	C-CER,CHIP;0.1nF,5%,50V,C0G,1608	1	SA
....4	C5085	2203-000236	C-CER,CHIP;0.1nF,5%,50V,C0G,1608	1	SA
....4	C1002	2203-000257	C-CER,CHIP;10nF,10%,50V,X7R,1608	1	SA
....4	C1005	2203-000257	C-CER,CHIP;10nF,10%,50V,X7R,1608	1	SA
....4	C1013	2203-000257	C-CER,CHIP;10nF,10%,50V,X7R,1608	1	SA
....4	C1022	2203-000257	C-CER,CHIP;10nF,10%,50V,X7R,1608	1	SA
....4	C1026	2203-000257	C-CER,CHIP;10nF,10%,50V,X7R,1608	1	SA
....4	C1034	2203-000257	C-CER,CHIP;10nF,10%,50V,X7R,1608	1	SA
....4	C1049	2203-000257	C-CER,CHIP;10nF,10%,50V,X7R,1608	1	SA
....4	C1094	2203-000257	C-CER,CHIP;10nF,10%,50V,X7R,1608	1	SA
....4	C3035	2203-000257	C-CER,CHIP;10nF,10%,50V,X7R,1608	1	SA
....4	C4005	2203-000257	C-CER,CHIP;10nF,10%,50V,X7R,1608	1	SA
....4	C4006	2203-000257	C-CER,CHIP;10nF,10%,50V,X7R,1608	1	SA
....4	C4007	2203-000257	C-CER,CHIP;10nF,10%,50V,X7R,1608	1	SA
....4	C4008	2203-000257	C-CER,CHIP;10nF,10%,50V,X7R,1608	1	SA
....4	C4009	2203-000257	C-CER,CHIP;10nF,10%,50V,X7R,1608	1	SA
....4	C4124	2203-000257	C-CER,CHIP;10nF,10%,50V,X7R,1608	1	SA
....4	C5006	2203-000257	C-CER,CHIP;10nF,10%,50V,X7R,1608	1	SA
....4	C5007	2203-000257	C-CER,CHIP;10nF,10%,50V,X7R,1608	1	SA
....4	C5008	2203-000257	C-CER,CHIP;10nF,10%,50V,X7R,1608	1	SA
....4	C5009	2203-000257	C-CER,CHIP;10nF,10%,50V,X7R,1608	1	SA

ELECTRONIC SERVICE TIRGOVISTE

Level	Loc. No.	Code No.	Description & Specification	Q'ty	SA/SNA
....4	C5010	2203-000257	C-CER,CHIP;10nF,10%,50V,X7R,1608	1	SA
....4	C5017	2203-000257	C-CER,CHIP;10nF,10%,50V,X7R,1608	1	SA
....4	C5036	2203-000257	C-CER,CHIP;10nF,10%,50V,X7R,1608	1	SA
....4	C5040	2203-000257	C-CER,CHIP;10nF,10%,50V,X7R,1608	1	SA
....4	C5061	2203-000257	C-CER,CHIP;10nF,10%,50V,X7R,1608	1	SA
....4	C5062	2203-000257	C-CER,CHIP;10nF,10%,50V,X7R,1608	1	SA
....4	C5064	2203-000257	C-CER,CHIP;10nF,10%,50V,X7R,1608	1	SA
....4	C1110	2203-000426	C-CER,CHIP;0.018nF,5%,50V,C0G,1608	1	SA
....4	C1121	2203-000440	C-CER,CHIP;1nF,10%,50V,X7R,1608	1	SA
....4	C3002	2203-000440	C-CER,CHIP;1nF,10%,50V,X7R,1608	1	SA
....4	C3003	2203-000440	C-CER,CHIP;1nF,10%,50V,X7R,1608	1	SA
....4	C3007	2203-000440	C-CER,CHIP;1nF,10%,50V,X7R,1608	1	SA
....4	C3020	2203-000440	C-CER,CHIP;1nF,10%,50V,X7R,1608	1	SA
....4	C3021	2203-000440	C-CER,CHIP;1nF,10%,50V,X7R,1608	1	SA
....4	C3029	2203-000440	C-CER,CHIP;1nF,10%,50V,X7R,1608	1	SA
....4	C4119	2203-000440	C-CER,CHIP;1nF,10%,50V,X7R,1608	1	SA
....4	C5087	2203-000440	C-CER,CHIP;1nF,10%,50V,X7R,1608	1	SA
....4	C4058	2203-000531	C-CER,CHIP;2.7nF,10%,50V,X7R,1608	1	SA
....4	C4066	2203-000531	C-CER,CHIP;2.7nF,10%,50V,X7R,1608	1	SA
....4	C4001	2203-000552	C-CER,CHIP;0.02nF,5%,50V,C0G,1608	1	SA
....4	C4011	2203-000552	C-CER,CHIP;0.02nF,5%,50V,C0G,1608	1	SA
....4	C1070	2203-000626	C-CER,CHIP;0.022nF,5%,50V,C0G,1608	1	SA
....4	C1082	2203-000626	C-CER,CHIP;0.022nF,5%,50V,C0G,1608	1	SA
....4	C3012	2203-000626	C-CER,CHIP;0.022nF,5%,50V,C0G,1608	1	SA
....4	C3013	2203-000626	C-CER,CHIP;0.022nF,5%,50V,C0G,1608	1	SA
....4	C3030	2203-000626	C-CER,CHIP;0.022nF,5%,50V,C0G,1608	1	SA
....4	C3031	2203-000626	C-CER,CHIP;0.022nF,5%,50V,C0G,1608	1	SA
....4	C1111	2203-000715	C-CER,CHIP;3.3nF,10%,50V,X7R,1608	1	SA
....4	C1142	2203-000783	C-CER,CHIP;0.33nF,5%,50V,C0G,1608	1	SA
....4	C1152	2203-000783	C-CER,CHIP;0.33nF,5%,50V,C0G,1608	1	SA
....4	C2009	2203-000783	C-CER,CHIP;0.33nF,5%,50V,C0G,1608	1	SA
....4	C2010	2203-000783	C-CER,CHIP;0.33nF,5%,50V,C0G,1608	1	SA
....4	C2015	2203-000783	C-CER,CHIP;0.33nF,5%,50V,C0G,1608	1	SA
....4	C2016	2203-000783	C-CER,CHIP;0.33nF,5%,50V,C0G,1608	1	SA
....4	C2026	2203-000783	C-CER,CHIP;0.33nF,5%,50V,C0G,1608	1	SA
....4	C2033_26	2203-000783	C-CER,CHIP;0.33nF,5%,50V,C0G,1608	1	SA
....4	C2034_26	2203-000783	C-CER,CHIP;0.33nF,5%,50V,C0G,1608	1	SA
....4	C2035_26	2203-000783	C-CER,CHIP;0.33nF,5%,50V,C0G,1608	1	SA
....4	C2036_26	2203-000783	C-CER,CHIP;0.33nF,5%,50V,C0G,1608	1	SA
....4	C2037_26	2203-000783	C-CER,CHIP;0.33nF,5%,50V,C0G,1608	1	SA
....4	C5076	2203-000783	C-CER,CHIP;0.33nF,5%,50V,C0G,1608	1	SA
....4	C5077	2203-000783	C-CER,CHIP;0.33nF,5%,50V,C0G,1608	1	SA
....4	C1100	2203-000798	C-CER,CHIP;33nF,10%,16V,X7R,TP,1608,-	1	SA
....4	C1101	2203-000798	C-CER,CHIP;33nF,10%,16V,X7R,TP,1608,-	1	SA
....4	C2029	2203-000815	C-CER,CHIP;0.033nF,5%,50V,C0G,1608	1	SA
....4	C2030	2203-000815	C-CER,CHIP;0.033nF,5%,50V,C0G,1608	1	SA
....4	C2031	2203-000815	C-CER,CHIP;0.033nF,5%,50V,C0G,1608	1	SA
....4	C5056	2203-000815	C-CER,CHIP;0.033nF,5%,50V,C0G,1608	1	SA
....4	C5057	2203-000815	C-CER,CHIP;0.033nF,5%,50V,C0G,1608	1	SA
....4	C5058	2203-000815	C-CER,CHIP;0.033nF,5%,50V,C0G,1608	1	SA
....4	C1119	2203-000888	C-CER,CHIP;4.7nF,10%,50V,X7R,1608	1	SA
....4	C1120	2203-000888	C-CER,CHIP;4.7nF,10%,50V,X7R,1608	1	SA
....4	C4003	2203-000888	C-CER,CHIP;4.7nF,10%,50V,X7R,1608	1	SA
....4	C4004	2203-000888	C-CER,CHIP;4.7nF,10%,50V,X7R,1608	1	SA
....4	C5003	2203-000888	C-CER,CHIP;4.7nF,10%,50V,X7R,1608	1	SA
....4	C5004	2203-000888	C-CER,CHIP;4.7nF,10%,50V,X7R,1608	1	SA
....4	C1063	2203-000972	C-CER,CHIP;47nF,10%,16V,X7R,1608	1	SA
....4	C2008	2203-000998	C-CER,CHIP;0.047nF,5%,50V,C0G,1608	1	SA
....4	C2021	2203-000998	C-CER,CHIP;0.047nF,5%,50V,C0G,1608	1	SA
....4	C5063	2203-000998	C-CER,CHIP;0.047nF,5%,50V,C0G,1608	1	SA

ELECTRONIC SERVICE TIRGOVISTE

Level	Loc. No.	Code No.	Description & Specification	Q'ty	SA/SNA
....4	C1056	2203-001402	C-CER,CHIP;220nF,+80-20%,16V,Y5V,TP,1608	1	SA
....4	C1164	2203-001607	C-CER,CHIP;0.22nF,5%,50V,NP0,1608	1	SA
....4	C1114	2203-001652	C-CER,CHIP;470nF,+80-20%,16V,Y5V,1608	1	SA
....4	C1116	2203-001652	C-CER,CHIP;470nF,+80-20%,16V,Y5V,1608	1	SA
....4	C1038	2203-001656	C-CER,CHIP;0.47nF,5%,50V,NP0,1608	1	SA
....4	C1061	2203-001656	C-CER,CHIP;0.47nF,5%,50V,NP0,1608	1	SA
....4	C3039	2203-001656	C-CER,CHIP;0.47nF,5%,50V,NP0,1608	1	SA
....4	C1117	2203-001724	C-CER,CHIP;4700nF,+80-20%,16V,Y5V,3216	1	SA
....4	C1003	2203-005005	C-CER,CHIP;100nF,10%,16V,X7R,1608	1	SA
....4	C1011	2203-005005	C-CER,CHIP;100nF,10%,16V,X7R,1608	1	SA
....4	C1032	2203-005005	C-CER,CHIP;100nF,10%,16V,X7R,1608	1	SA
....4	C1039	2203-005005	C-CER,CHIP;100nF,10%,16V,X7R,1608	1	SA
....4	C1066	2203-005005	C-CER,CHIP;100nF,10%,16V,X7R,1608	1	SA
....4	C1068	2203-005005	C-CER,CHIP;100nF,10%,16V,X7R,1608	1	SA
....4	C1071	2203-005005	C-CER,CHIP;100nF,10%,16V,X7R,1608	1	SA
....4	C1072	2203-005005	C-CER,CHIP;100nF,10%,16V,X7R,1608	1	SA
....4	C1073	2203-005005	C-CER,CHIP;100nF,10%,16V,X7R,1608	1	SA
....4	C1074	2203-005005	C-CER,CHIP;100nF,10%,16V,X7R,1608	1	SA
....4	C1078	2203-005005	C-CER,CHIP;100nF,10%,16V,X7R,1608	1	SA
....4	C1079	2203-005005	C-CER,CHIP;100nF,10%,16V,X7R,1608	1	SA
....4	C1093	2203-005005	C-CER,CHIP;100nF,10%,16V,X7R,1608	1	SA
....4	C1104	2203-005005	C-CER,CHIP;100nF,10%,16V,X7R,1608	1	SA
....4	C1108	2203-005005	C-CER,CHIP;100nF,10%,16V,X7R,1608	1	SA
....4	C1129	2203-005005	C-CER,CHIP;100nF,10%,16V,X7R,1608	1	SA
....4	C1130	2203-005005	C-CER,CHIP;100nF,10%,16V,X7R,1608	1	SA
....4	C1148	2203-005005	C-CER,CHIP;100nF,10%,16V,X7R,1608	1	SA
....4	C1169	2203-005005	C-CER,CHIP;100nF,10%,16V,X7R,1608	1	SA
....4	C1171	2203-005005	C-CER,CHIP;100nF,10%,16V,X7R,1608	1	SA
....4	C1173	2203-005005	C-CER,CHIP;100nF,10%,16V,X7R,1608	1	SA
....4	C3009	2203-005005	C-CER,CHIP;100nF,10%,16V,X7R,1608	1	SA
....4	C3010	2203-005005	C-CER,CHIP;100nF,10%,16V,X7R,1608	1	SA
....4	C3014	2203-005005	C-CER,CHIP;100nF,10%,16V,X7R,1608	1	SA
....4	C3015	2203-005005	C-CER,CHIP;100nF,10%,16V,X7R,1608	1	SA
....4	C3016	2203-005005	C-CER,CHIP;100nF,10%,16V,X7R,1608	1	SA
....4	C3018	2203-005005	C-CER,CHIP;100nF,10%,16V,X7R,1608	1	SA
....4	C3019	2203-005005	C-CER,CHIP;100nF,10%,16V,X7R,1608	1	SA
....4	C3022	2203-005005	C-CER,CHIP;100nF,10%,16V,X7R,1608	1	SA
....4	C3026	2203-005005	C-CER,CHIP;100nF,10%,16V,X7R,1608	1	SA
....4	C3027	2203-005005	C-CER,CHIP;100nF,10%,16V,X7R,1608	1	SA
....4	C3032	2203-005005	C-CER,CHIP;100nF,10%,16V,X7R,1608	1	SA
....4	C3037	2203-005005	C-CER,CHIP;100nF,10%,16V,X7R,1608	1	SA
....4	C3040	2203-005005	C-CER,CHIP;100nF,10%,16V,X7R,1608	1	SA
....4	C3042	2203-005005	C-CER,CHIP;100nF,10%,16V,X7R,1608	1	SA
....4	C3044	2203-005005	C-CER,CHIP;100nF,10%,16V,X7R,1608	1	SA
....4	C3046	2203-005005	C-CER,CHIP;100nF,10%,16V,X7R,1608	1	SA
....4	C3047	2203-005005	C-CER,CHIP;100nF,10%,16V,X7R,1608	1	SA
....4	C3049	2203-005005	C-CER,CHIP;100nF,10%,16V,X7R,1608	1	SA
....4	C4002	2203-005005	C-CER,CHIP;100nF,10%,16V,X7R,1608	1	SA
....4	C4125	2203-005005	C-CER,CHIP;100nF,10%,16V,X7R,1608	1	SA
....4	C4126	2203-005005	C-CER,CHIP;100nF,10%,16V,X7R,1608	1	SA
....4	C4129	2203-005005	C-CER,CHIP;100nF,10%,16V,X7R,1608	1	SA
....4	C5001	2203-005005	C-CER,CHIP;100nF,10%,16V,X7R,1608	1	SA
....4	C5002	2203-005005	C-CER,CHIP;100nF,10%,16V,X7R,1608	1	SA
....4	C5011	2203-005005	C-CER,CHIP;100nF,10%,16V,X7R,1608	1	SA
....4	C5012	2203-005005	C-CER,CHIP;100nF,10%,16V,X7R,1608	1	SA
....4	C5021	2203-005005	C-CER,CHIP;100nF,10%,16V,X7R,1608	1	SA
....4	C5023	2203-005005	C-CER,CHIP;100nF,10%,16V,X7R,1608	1	SA
....4	C5039	2203-005005	C-CER,CHIP;100nF,10%,16V,X7R,1608	1	SA
....4	C5054	2203-005005	C-CER,CHIP;100nF,10%,16V,X7R,1608	1	SA
....4	C1143	2203-005030	C-CER,CHIP;470nF,+80-20%,50V,Y5V,TP,3216	1	SA

ELECTRONIC SERVICE TIRGOVISTE

Level	Loc. No.	Code No.	Description & Specification	Q'ty	SA/SNA
....4	C1153	2203-005030	C-CER,CHIP;470nF,+80-20%,50V,Y5V,TP,3216	1	SA
....4	C1031	2203-005065	C-CER,CHIP;1000nF,+80-20%,10V,Y5V,1608	1	SA
....4	C1040	2203-005065	C-CER,CHIP;1000nF,+80-20%,10V,Y5V,1608	1	SA
....4	C1155	2203-005065	C-CER,CHIP;1000nF,+80-20%,10V,Y5V,1608	1	SA
....4	C2038	2203-005065	C-CER,CHIP;1000nF,+80-20%,10V,Y5V,1608	1	SA
....4	C3023	2203-005065	C-CER,CHIP;1000nF,+80-20%,10V,Y5V,1608	1	SA
....4	C3033	2203-005065	C-CER,CHIP;1000nF,+80-20%,10V,Y5V,1608	1	SA
....4	C4117	2203-005065	C-CER,CHIP;1000nF,+80-20%,10V,Y5V,1608	1	SA
....4	C4118	2203-005065	C-CER,CHIP;1000nF,+80-20%,10V,Y5V,1608	1	SA
....4	C1122	2203-005249	C-CER,CHIP;100nF,10%,50V,X7R,1608	1	SA
....4	C1131	2203-005249	C-CER,CHIP;100nF,10%,50V,X7R,1608	1	SA
....4	C1137	2203-005249	C-CER,CHIP;100nF,10%,50V,X7R,1608	1	SA
....4	C1138	2203-005249	C-CER,CHIP;100nF,10%,50V,X7R,1608	1	SA
....4	C1140	2203-005249	C-CER,CHIP;100nF,10%,50V,X7R,1608	1	SA
....4	C1144	2203-005249	C-CER,CHIP;100nF,10%,50V,X7R,1608	1	SA
....4	C1145	2203-005249	C-CER,CHIP;100nF,10%,50V,X7R,1608	1	SA
....4	C1146	2203-005249	C-CER,CHIP;100nF,10%,50V,X7R,1608	1	SA
....4	C1147	2203-005249	C-CER,CHIP;100nF,10%,50V,X7R,1608	1	SA
....4	C1149	2203-005249	C-CER,CHIP;100nF,10%,50V,X7R,1608	1	SA
....4	C1150	2203-005249	C-CER,CHIP;100nF,10%,50V,X7R,1608	1	SA
....4	C1154	2203-005249	C-CER,CHIP;100nF,10%,50V,X7R,1608	1	SA
....4	C1156	2203-005249	C-CER,CHIP;100nF,10%,50V,X7R,1608	1	SA
....4	C1157	2203-005249	C-CER,CHIP;100nF,10%,50V,X7R,1608	1	SA
....4	C1160	2203-005249	C-CER,CHIP;100nF,10%,50V,X7R,1608	1	SA
....4	C1166	2203-005249	C-CER,CHIP;100nF,10%,50V,X7R,1608	1	SA
....4	C4014	2203-005533	C-CER,CHIP;1000nF,20%,6.3V,X7R,TP,1608	1	SA
....4	C4015	2203-005533	C-CER,CHIP;1000nF,20%,6.3V,X7R,TP,1608	1	SA
....4	C4024	2203-005533	C-CER,CHIP;1000nF,20%,6.3V,X7R,TP,1608	1	SA
....4	C4033	2203-005533	C-CER,CHIP;1000nF,20%,6.3V,X7R,TP,1608	1	SA
....4	C4037	2203-005533	C-CER,CHIP;1000nF,20%,6.3V,X7R,TP,1608	1	SA
....4	C4044	2203-005533	C-CER,CHIP;1000nF,20%,6.3V,X7R,TP,1608	1	SA
....4	C4050	2203-005533	C-CER,CHIP;1000nF,20%,6.3V,X7R,TP,1608	1	SA
....4	C4065	2203-005533	C-CER,CHIP;1000nF,20%,6.3V,X7R,TP,1608	1	SA
....4	C4074	2203-005533	C-CER,CHIP;1000nF,20%,6.3V,X7R,TP,1608	1	SA
....4	C4075	2203-005533	C-CER,CHIP;1000nF,20%,6.3V,X7R,TP,1608	1	SA
....4	C4078	2203-005533	C-CER,CHIP;1000nF,20%,6.3V,X7R,TP,1608	1	SA
....4	C4079	2203-005533	C-CER,CHIP;1000nF,20%,6.3V,X7R,TP,1608	1	SA
....4	C4087	2203-005533	C-CER,CHIP;1000nF,20%,6.3V,X7R,TP,1608	1	SA
....4	C4088	2203-005533	C-CER,CHIP;1000nF,20%,6.3V,X7R,TP,1608	1	SA
....4	C4089	2203-005533	C-CER,CHIP;1000nF,20%,6.3V,X7R,TP,1608	1	SA
....4	C4090	2203-005533	C-CER,CHIP;1000nF,20%,6.3V,X7R,TP,1608	1	SA
....4	C4091	2203-005533	C-CER,CHIP;1000nF,20%,6.3V,X7R,TP,1608	1	SA
....4	C4092	2203-005533	C-CER,CHIP;1000nF,20%,6.3V,X7R,TP,1608	1	SA
....4	C4093	2203-005533	C-CER,CHIP;1000nF,20%,6.3V,X7R,TP,1608	1	SA
....4	C4094	2203-005533	C-CER,CHIP;1000nF,20%,6.3V,X7R,TP,1608	1	SA
....4	C1001	2203-006333	C-CER,CHIP;10000nF,20%,16V,X5R,TP,3216	1	SA
....4	C1012	2203-006333	C-CER,CHIP;10000nF,20%,16V,X5R,TP,3216	1	SA
....4	C1014	2203-006333	C-CER,CHIP;10000nF,20%,16V,X5R,TP,3216	1	SA
....4	C1017	2203-006333	C-CER,CHIP;10000nF,20%,16V,X5R,TP,3216	1	SA
....4	C1018	2203-006333	C-CER,CHIP;10000nF,20%,16V,X5R,TP,3216	1	SA
....4	C1019	2203-006333	C-CER,CHIP;10000nF,20%,16V,X5R,TP,3216	1	SA
....4	C1020	2203-006333	C-CER,CHIP;10000nF,20%,16V,X5R,TP,3216	1	SA
....4	C1023	2203-006333	C-CER,CHIP;10000nF,20%,16V,X5R,TP,3216	1	SA
....4	C1024	2203-006333	C-CER,CHIP;10000nF,20%,16V,X5R,TP,3216	1	SA
....4	C1030	2203-006333	C-CER,CHIP;10000nF,20%,16V,X5R,TP,3216	1	SA
....4	C1033	2203-006333	C-CER,CHIP;10000nF,20%,16V,X5R,TP,3216	1	SA
....4	C1035	2203-006333	C-CER,CHIP;10000nF,20%,16V,X5R,TP,3216	1	SA
....4	C1041	2203-006333	C-CER,CHIP;10000nF,20%,16V,X5R,TP,3216	1	SA
....4	C1044	2203-006333	C-CER,CHIP;10000nF,20%,16V,X5R,TP,3216	1	SA
....4	C1045	2203-006333	C-CER,CHIP;10000nF,20%,16V,X5R,TP,3216	1	SA

ELECTRONIC SERVICE TIRGOVISTE

Level	Loc. No.	Code No.	Description & Specification	Q'ty	SA/SNA
....4	C1047	2203-006333	C-CER,CHIP;10000nF,20%,16V,X5R,TP,3216	1	SA
....4	C1048	2203-006333	C-CER,CHIP;10000nF,20%,16V,X5R,TP,3216	1	SA
....4	C1051	2203-006333	C-CER,CHIP;10000nF,20%,16V,X5R,TP,3216	1	SA
....4	C1058	2203-006333	C-CER,CHIP;10000nF,20%,16V,X5R,TP,3216	1	SA
....4	C1060	2203-006333	C-CER,CHIP;10000nF,20%,16V,X5R,TP,3216	1	SA
....4	C1065	2203-006333	C-CER,CHIP;10000nF,20%,16V,X5R,TP,3216	1	SA
....4	C1076	2203-006333	C-CER,CHIP;10000nF,20%,16V,X5R,TP,3216	1	SA
....4	C1080	2203-006333	C-CER,CHIP;10000nF,20%,16V,X5R,TP,3216	1	SA
....4	C1081	2203-006333	C-CER,CHIP;10000nF,20%,16V,X5R,TP,3216	1	SA
....4	C1083	2203-006333	C-CER,CHIP;10000nF,20%,16V,X5R,TP,3216	1	SA
....4	C1085	2203-006333	C-CER,CHIP;10000nF,20%,16V,X5R,TP,3216	1	SA
....4	C1088	2203-006333	C-CER,CHIP;10000nF,20%,16V,X5R,TP,3216	1	SA
....4	C1089	2203-006333	C-CER,CHIP;10000nF,20%,16V,X5R,TP,3216	1	SA
....4	C1090	2203-006333	C-CER,CHIP;10000nF,20%,16V,X5R,TP,3216	1	SA
....4	C1091	2203-006333	C-CER,CHIP;10000nF,20%,16V,X5R,TP,3216	1	SA
....4	C1092	2203-006333	C-CER,CHIP;10000nF,20%,16V,X5R,TP,3216	1	SA
....4	C1096	2203-006333	C-CER,CHIP;10000nF,20%,16V,X5R,TP,3216	1	SA
....4	C1099	2203-006333	C-CER,CHIP;10000nF,20%,16V,X5R,TP,3216	1	SA
....4	C1126	2203-006333	C-CER,CHIP;10000nF,20%,16V,X5R,TP,3216	1	SA
....4	C1136	2203-006333	C-CER,CHIP;10000nF,20%,16V,X5R,TP,3216	1	SA
....4	C1172	2203-006333	C-CER,CHIP;10000nF,20%,16V,X5R,TP,3216	1	SA
....4	C3017	2203-006333	C-CER,CHIP;10000nF,20%,16V,X5R,TP,3216	1	SA
....4	C4057	2203-006333	C-CER,CHIP;10000nF,20%,16V,X5R,TP,3216	1	SA
....4	C4064	2203-006333	C-CER,CHIP;10000nF,20%,16V,X5R,TP,3216	1	SA
....4	C4072	2203-006333	C-CER,CHIP;10000nF,20%,16V,X5R,TP,3216	1	SA
....4	C4082	2203-006333	C-CER,CHIP;10000nF,20%,16V,X5R,TP,3216	1	SA
....4	C4122	2203-006333	C-CER,CHIP;10000nF,20%,16V,X5R,TP,3216	1	SA
....4	C5083	2203-006333	C-CER,CHIP;10000nF,20%,16V,X5R,TP,3216	1	SA
....4	C5086	2203-006333	C-CER,CHIP;10000nF,20%,16V,X5R,TP,3216	1	SA
....4	C2001	2402-000108	C-AL,SMD;10uF,20%,16V,WT,TP,4.3x4.3x5.2m	1	SA
....4	C5037	2402-000108	C-AL,SMD;10uF,20%,16V,WT,TP,4.3x4.3x5.2m	1	SA
....4	C5041	2402-000108	C-AL,SMD;10uF,20%,16V,WT,TP,4.3x4.3x5.2m	1	SA
....4	C5024	2402-000179	C-AL,SMD;47uF,20%,16V,GP,TP,6.6x6.6x5.7m	1	SA
....4	C4012	2402-001059	C-AL,SMD;220UF,20%,6.3V,-,TP,6X6.6X6.6	1	SA
....4	C4013	2402-001059	C-AL,SMD;220UF,20%,6.3V,-,TP,6X6.6X6.6	1	SA
....4	C1102	2402-001081	C-AL,SMD;100uF,20%,25V,WT,TP,8.3x8.3x10	1	SA
....4	C1125	2402-001083	C-AL,SMD;100uF,20%,50V,GP,TP,10x10.3x10m	1	SA
....4	C5032	2402-001097	C-AL,SMD;0.1UF,20%,50V,WT,TP,4.3X4.3X5.2	1	SA
....4	C5033	2402-001097	C-AL,SMD;0.1UF,20%,50V,WT,TP,4.3X4.3X5.2	1	SA
....4	C1009	2402-001128	C-AL,SMD;100UF,20%,16V,WT,TP,6.3X5.7MM	1	SA
....4	C1010	2402-001128	C-AL,SMD;100UF,20%,16V,WT,TP,6.3X5.7MM	1	SA
....4	C1015	2402-001128	C-AL,SMD;100UF,20%,16V,WT,TP,6.3X5.7MM	1	SA
....4	C1029	2402-001128	C-AL,SMD;100UF,20%,16V,WT,TP,6.3X5.7MM	1	SA
....4	C1036	2402-001128	C-AL,SMD;100UF,20%,16V,WT,TP,6.3X5.7MM	1	SA
....4	C1042	2402-001128	C-AL,SMD;100UF,20%,16V,WT,TP,6.3X5.7MM	1	SA
....4	C1059	2402-001128	C-AL,SMD;100UF,20%,16V,WT,TP,6.3X5.7MM	1	SA
....4	C1112	2402-001128	C-AL,SMD;100UF,20%,16V,WT,TP,6.3X5.7MM	1	SA
....4	C1113	2402-001128	C-AL,SMD;100UF,20%,16V,WT,TP,6.3X5.7MM	1	SA
....4	C1115	2402-001128	C-AL,SMD;100UF,20%,16V,WT,TP,6.3X5.7MM	1	SA
....4	C1123	2402-001128	C-AL,SMD;100UF,20%,16V,WT,TP,6.3X5.7MM	1	SA
....4	C1007	2402-001129	C-AL,SMD;47UF,20%,16V,WT,TP,6.3X5.2MM	1	SA
....4	C1028	2402-001129	C-AL,SMD;47UF,20%,16V,WT,TP,6.3X5.2MM	1	SA
....4	C1064	2402-001129	C-AL,SMD;47UF,20%,16V,WT,TP,6.3X5.2MM	1	SA
....4	C1069	2402-001129	C-AL,SMD;47UF,20%,16V,WT,TP,6.3X5.2MM	1	SA
....4	C1107	2402-001129	C-AL,SMD;47UF,20%,16V,WT,TP,6.3X5.2MM	1	SA
....4	C3036	2402-001129	C-AL,SMD;47UF,20%,16V,WT,TP,6.3X5.2MM	1	SA
....4	C3038	2402-001129	C-AL,SMD;47UF,20%,16V,WT,TP,6.3X5.2MM	1	SA
....4	C4010	2402-001129	C-AL,SMD;47UF,20%,16V,WT,TP,6.3X5.2MM	1	SA
....4	C5042	2402-001129	C-AL,SMD;47UF,20%,16V,WT,TP,6.3X5.2MM	1	SA
....4	C1106	2402-001160	C-AL,SMD;330UF,20%,16V,WT,TP,1008	1	SA

ELECTRONIC SERVICE TIRGOVISTE

Level	Loc. No.	Code No.	Description & Specification	Q'ty	SA/SNA
....4	C1077	2402-001178	C-AL,SMD;10uF,20%,16V,WT,TP,4.3x4.3x5.8m	1	SA
....4	C1139	2402-001178	C-AL,SMD;10uF,20%,16V,WT,TP,4.3x4.3x5.8m	1	SA
....4	C2017	2402-001178	C-AL,SMD;10uF,20%,16V,WT,TP,4.3x4.3x5.8m	1	SA
....4	C3004	2402-001178	C-AL,SMD;10uF,20%,16V,WT,TP,4.3x4.3x5.8m	1	SA
....4	C3006	2402-001178	C-AL,SMD;10uF,20%,16V,WT,TP,4.3x4.3x5.8m	1	SA
....4	C3008	2402-001178	C-AL,SMD;10uF,20%,16V,WT,TP,4.3x4.3x5.8m	1	SA
....4	C3011	2402-001178	C-AL,SMD;10uF,20%,16V,WT,TP,4.3x4.3x5.8m	1	SA
....4	C3028	2402-001178	C-AL,SMD;10uF,20%,16V,WT,TP,4.3x4.3x5.8m	1	SA
....4	C3041	2402-001178	C-AL,SMD;10uF,20%,16V,WT,TP,4.3x4.3x5.8m	1	SA
....4	C3043	2402-001178	C-AL,SMD;10uF,20%,16V,WT,TP,4.3x4.3x5.8m	1	SA
....4	C3045	2402-001178	C-AL,SMD;10uF,20%,16V,WT,TP,4.3x4.3x5.8m	1	SA
....4	C3048	2402-001178	C-AL,SMD;10uF,20%,16V,WT,TP,4.3x4.3x5.8m	1	SA
....4	C3050	2402-001178	C-AL,SMD;10uF,20%,16V,WT,TP,4.3x4.3x5.8m	1	SA
....4	C3051	2402-001178	C-AL,SMD;10uF,20%,16V,WT,TP,4.3x4.3x5.8m	1	SA
....4	C1057	2402-001183	C-AL,SMD;22UF,20%,16V,WT,TP,5.3X5.3X6MM	1	SA
....4	C1128	2402-001183	C-AL,SMD;22UF,20%,16V,WT,TP,5.3X5.3X6MM	1	SA
....4	C1167	2402-001183	C-AL,SMD;22UF,20%,16V,WT,TP,5.3X5.3X6MM	1	SA
....4	C1170	2402-001183	C-AL,SMD;22UF,20%,16V,WT,TP,5.3X5.3X6MM	1	SA
....4	C4123	2402-001183	C-AL,SMD;22UF,20%,16V,WT,TP,5.3X5.3X6MM	1	SA
....4	C5005	2402-001183	C-AL,SMD;22UF,20%,16V,WT,TP,5.3X5.3X6MM	1	SA
....4	C5016	2402-001183	C-AL,SMD;22UF,20%,16V,WT,TP,5.3X5.3X6MM	1	SA
....4	C1127	2402-001221	C-AL,SMD;470UF,20%,16V,-,TP,A8.3XB8.3XL1	1	SA
....4	C1165	2402-001221	C-AL,SMD;470UF,20%,16V,-,TP,A8.3XB8.3XL1	1	SA
....4	C4030	2402-001226	C-AL,SMD;4.7UF,20%,35V,HR,TP,4.3X4.3X5.8	1	SA
....4	C4047	2402-001226	C-AL,SMD;4.7UF,20%,35V,HR,TP,4.3X4.3X5.8	1	SA
....4	C4051	2402-001226	C-AL,SMD;4.7UF,20%,35V,HR,TP,4.3X4.3X5.8	1	SA
....4	C4127	2402-001226	C-AL,SMD;4.7UF,20%,35V,HR,TP,4.3X4.3X5.8	1	SA
....4	C5078	2402-001257	C-AL,SMD;470uF,20%,16V,-,TP,8.3*10	1	SA
....4	C5079	2402-001257	C-AL,SMD;470uF,20%,16V,-,TP,8.3*10	1	SA
....4	C5080	2402-001257	C-AL,SMD;470uF,20%,16V,-,TP,8.3*10	1	SA
....4	C1095	2409-001029	C-ORGANIC;120uF,20%,6.3V,WT,TP,10.3x10.3	1	SA
....4	T0052	2703-000274	INDUCTOR-SMD;2.2uH,10%,2012	1	SA
....4	T0052	2703-000398	INDUCTOR-SMD;10uH,10%,3225	1	SA
....4	T0052	2703-000398	INDUCTOR-SMD;10uH,10%,3225	1	SA
....4	T0052	2703-000398	INDUCTOR-SMD;10uH,10%,3225	1	SA
....4	T0052	2703-000398	INDUCTOR-SMD;10uH,10%,3225	1	SA
....4	T0052	2703-000398	INDUCTOR-SMD;10uH,10%,3225	1	SA
....4	T0052	2703-000398	INDUCTOR-SMD;10uH,10%,3225	1	SA
....4	T0052	2703-000398	INDUCTOR-SMD;10uH,10%,3225	1	SA
....4	T0052	2703-000398	INDUCTOR-SMD;10uH,10%,3225	1	SA
....4	T0052	2703-000398	INDUCTOR-SMD;10uH,10%,3225	1	SA
....4	T0052	2703-000398	INDUCTOR-SMD;10uH,10%,3225	1	SA
....4	T0052	2703-000398	INDUCTOR-SMD;10uH,10%,3225	1	SA
....4	T0052	2703-000398	INDUCTOR-SMD;10uH,10%,3225	1	SA
....4	T0052	2703-000398	INDUCTOR-SMD;10uH,10%,3225	1	SA
....4	T0052	2703-000398	INDUCTOR-SMD;10uH,10%,3225	1	SA
....4	T0052	2703-000398	INDUCTOR-SMD;10uH,10%,3225	1	SA
....4	T0052	2703-001229	INDUCTOR-SMD;2.2uH,10%,1608	1	SA
....4	T0052	2703-001229	INDUCTOR-SMD;2.2uH,10%,1608	1	SA
....4	T0052	2703-001229	INDUCTOR-SMD;2.2uH,10%,1608	1	SA
....4	T0052	2703-001229	INDUCTOR-SMD;2.2uH,10%,1608	1	SA
....4	T0052	2703-001229	INDUCTOR-SMD;2.2uH,10%,1608	1	SA
....4	T0052	2703-001229	INDUCTOR-SMD;2.2uH,10%,1608	1	SA
....4	T0052	2703-001778	INDUCTOR-SMD;3.3uH,20%,3225	1	SA
....4	T0052	2703-002722	INDUCTOR-SMD;22uH,20%,12x12mm	1	SA
....4	T0052	2703-002915	INDUCTOR-SMD;22uH,20%,8080	1	SA
....4	T0052	2703-002915	INDUCTOR-SMD;22uH,20%,8080	1	SA
....4	T0052	2703-002915	INDUCTOR-SMD;22uH,20%,8080	1	SA
....4	T0052	2703-002915	INDUCTOR-SMD;22uH,20%,8080	1	SA
....4	X3002	2801-003326	CRYSTAL-SMD;24MHZ,30PPM,28-ABX,20PF,50OH	1	SA

ELECTRONIC SERVICE TIRGOVISTE

Level	Loc. No.	Code No.	Description & Specification	Q'ty	SA/SNA
....4	X3001	2801-003923	CRYSTAL-SMD;10MHz,30ppm,28-AAN,20pF,60oh	1	SA
....4	X1001	2801-003954	CRYSTAL-SMD;27MHz,30ppm,28-AAN,16pF,50oh	1	SA
....4	X4001	2801-004483	CRYSTAL-SMD;28.322MHz,30ppm,HC-49,20pF,5	1	SA
....4	F103	2901-001114	FILTER-EMI SMD;25VDC,2.0ADC,-,100nF,3.2x	1	SA
....4	T0568	3301-000314	BEAD-SMD;120ohm,1.6x0.8x0.8mm,-,-,-	1	SNA
....4	T0568	3301-000314	BEAD-SMD;120ohm,1.6x0.8x0.8mm,-,-,-	1	SNA
....4	T0568	3301-001145	BEAD-SMD;60ohm,4516,TP,70ohm/45MHz,82ohm	1	SNA
....4	T0568	3301-001145	BEAD-SMD;60ohm,4516,TP,70ohm/45MHz,82ohm	1	SNA
....4	T0568	3301-001145	BEAD-SMD;60ohm,4516,TP,70ohm/45MHz,82ohm	1	SNA
....4	T0568	3301-001145	BEAD-SMD;60ohm,4516,TP,70ohm/45MHz,82ohm	1	SNA
....4	T0568	3301-001236	BEAD-SMD;60ohm,1608,-,-,-	1	SNA
....4	T0568	3301-001236	BEAD-SMD;60ohm,1608,-,-,-	1	SNA
....4	T0568	3301-001236	BEAD-SMD;60ohm,1608,-,-,-	1	SNA
....4	T0568	3301-001236	BEAD-SMD;60ohm,1608,-,-,-	1	SNA
....4	T0568	3301-001236	BEAD-SMD;60ohm,1608,-,-,-	1	SNA
....4	T0568	3301-001236	BEAD-SMD;60ohm,1608,-,-,-	1	SNA
....4	T0568	3301-001324	BEAD-SMD;15ohm,2012,600mA,TP,,,0.1ohm	1	SNA
....4	T0568	3301-001324	BEAD-SMD;15ohm,2012,600mA,TP,,,0.1ohm	1	SNA
....4	T0568	3301-001324	BEAD-SMD;15ohm,2012,600mA,TP,,,0.1ohm	1	SNA
....4	T0568	3301-001324	BEAD-SMD;15ohm,2012,600mA,TP,,,0.1ohm	1	SNA
....4	T0568	3301-001324	BEAD-SMD;15ohm,2012,600mA,TP,,,0.1ohm	1	SNA
....4	T0568	3301-001324	BEAD-SMD;15ohm,2012,600mA,TP,,,0.1ohm	1	SNA
....4	T0568	3301-001324	BEAD-SMD;15ohm,2012,600mA,TP,,,0.1ohm	1	SNA
....4	T0568	3301-001324	BEAD-SMD;15ohm,2012,600mA,TP,,,0.1ohm	1	SNA
....4	T0568	3301-001324	BEAD-SMD;15ohm,2012,600mA,TP,,,0.1ohm	1	SNA
....4	T0568	3301-001324	BEAD-SMD;15ohm,2012,600mA,TP,,,0.1ohm	1	SNA
....4	T0568	3301-001324	BEAD-SMD;15ohm,2012,600mA,TP,,,0.1ohm	1	SNA
....4	T0568	3301-001324	BEAD-SMD;15ohm,2012,600mA,TP,,,0.1ohm	1	SNA
....4	T0568	3301-001393	BEAD-SMD;60ohm,3216,1500mA,TP,41ohm/40MH	1	SNA
....4	T0568	3301-001404	BEAD-SMD;30ohm,2012,TP,-,-	1	SA
....4	T0568	3301-001404	BEAD-SMD;30ohm,2012,TP,-,-	1	SA
....4	T0568	3301-001404	BEAD-SMD;30ohm,2012,TP,-,-	1	SA
....4	T0568	3301-001404	BEAD-SMD;30ohm,2012,TP,-,-	1	SA
....4	T0568	3301-001404	BEAD-SMD;30ohm,2012,TP,-,-	1	SA
....4	T0568	3301-001404	BEAD-SMD;30ohm,2012,TP,-,-	1	SA
....4	T0568	3301-001569	BEAD-SMD;600ohm,2012,1000mA,TP,520ohm/90	1	SNA
....4	T0568	3301-001569	BEAD-SMD;600ohm,2012,1000mA,TP,520ohm/90	1	SNA
....4	T0568	3301-001569	BEAD-SMD;600ohm,2012,1000mA,TP,520ohm/90	1	SNA
....4	CN2001	3701-001311	CONNECTOR-HDMI;21P,2R,FEMALE,SMD-S,AU30U	1	SA
....4	CN1003	3711-005291	HEADER-BOARD TO CABLE;BOX,2P,1R,2MM,SMD-	1	SA
....4	CN1002	3711-005292	HEADER-BOARD TO CABLE;BOX,3P,1R,2MM,SMD-	1	SA
....4	CN5001	3711-005497	HEADER-BOARD TO CABLE;BOX,15P,1R,1.25MM,	1	SA
....4	L1012	BN27-00007A	COIL CHOKE-SMD;DHB0504-100,RB15/17NS,10u	1	SA
....4	T0077	BN41-00700B	PCB MAIN;CAMBRIDGE,FR-4,4,MP2.0,1.6T,192	1	SNA
....4	M0018	BN97-00805F	ASSY MICOM;T-BRDMPEUD-1011,LE32R73BDX/XE	1	SA
.....5	IC115	1107-001555	IC-FLASH MEMORY;49BV802A,8MBIT,1MX8/512K	1	SNA
....4	M0018	BN97-00805G	ASSY MICOM;T-XXXX-XXXX,LE32R73BDX/XEU24C	1	SA
.....5	IC520	0903-001389	IC-MICROCONTROLLER;S3F866B,8Bit,QFP,44P,	1	SNA
1	MP1.0	BN91-01017C	ASSY LCD-AMZ;LE26R71BX/*	1	SNA
..2	M0215	BN07-00254A	LCD-PANEL;T260XW02,8bit,626.0*373.0*50.0	1	SA
1		BN91-01018D	ASSY SHIELD-AUO;LE26R73BDX/XEU,26",CAMBR	1	SNA
..2	M0081	6003-000115	SCREW-TAPTITE;BH,+,B,M3,L6,ZPC(BLK),SWRC	4	SNA
..2	M0081	6003-000115	SCREW-TAPTITE;BH,+,B,M3,L6,ZPC(BLK),SWRC	4	SNA
..2	M0081	6003-000115	SCREW-TAPTITE;BH,+,B,M3,L6,ZPC(BLK),SWRC	2	SNA
..2	M0081	6003-000115	SCREW-TAPTITE;BH,+,B,M3,L6,ZPC(BLK),SWRC	3	SNA
..2	M0081	6003-000115	SCREW-TAPTITE;BH,+,B,M3,L6,ZPC(BLK),SWRC	2	SNA
..2	M0081	6003-000115	SCREW-TAPTITE;BH,+,B,M3,L6,ZPC(BLK),SWRC	1	SNA

ELECTRONIC SERVICE TIRGOVISTE

Level	Loc. No.	Code No.	Description & Specification	Q'ty	SA/SNA
..2	M0081	6003-001003	SCREW-TAPTITE;BH,+,B,M4,L12,ZPC(BLK),SWR	2	SNA
..2	M0081	6003-001003	SCREW-TAPTITE;BH,+,B,M4,L12,ZPC(BLK),SWR	6	SNA
..2	M0081	6003-001003	SCREW-TAPTITE;BH,+,B,M4,L12,ZPC(BLK),SWR	1	SNA
..2	T0081	6006-000245	SCREW-MACHINE;WSP,PH,+,M4,L8,ZPC(YEL),SW	4	SNA
..2	T0081	6006-000245	SCREW-MACHINE;WSP,PH,+,M4,L8,ZPC(YEL),SW	1	SNA
..2	T0076	BN39-00615D	CBF HARNESS;BORDEAUX,1617#22,3P,1P,RING,	1	SA
..2	M2893	BN39-00691B	LEAD CONNECTOR;LE32R71BX,UL1007#26,16P,1	1	SA
..2		BN61-02201A	BRACKET-STAND LINK;Bordeaux 32,SECC,T1.6	1	SNA
..2		BN61-02207A	BRACKET-PANEL SIDE;Bordeaux 26,SECC,T1.2	4	SNA
..2	M0146	BN63-02460A	SHIELD CASE;CAMBRIDGE 26,SECC,T0.8,ITALY	1	SNA
..2	T0159	BN96-03058A	ASSY PCB P-SMPS;Bordeaux 26 PFC,LE26R71B	1	SA
..2	M2893	BH39-00362G	LEAD CONNECTOR;SONOMA,UL1007#26,5PIN,100	1	SA
..2	M2893	BN39-00603K	LEAD CONNECTOR;LE32R73BDX,UL1007#26,14P,	1	SA
..2	M2893	BN39-00712D	LEAD CONNECTOR-LVDS;LE32R73BDX,UL1571#30	1	SA
..2	T0447	BN96-03439B	ASSY BRACKET P-PANEL;26,SECC,BUILT-IN,AU	1	SNA
...3	M0081	6003-000115	SCREW-TAPTITE;BH,+,B,M3,L6,ZPC(BLK),SWRC	1	SNA
...3	M0146	BN61-02205B	BRACKET-PANEL TOP;Bordeaux 26,SECC,T1.2	1	SNA
...3		BN61-02206B	BRACKET-PANEL BOTTOM;Bordeaux 26,SECC,T1	1	SNA
...3		BN61-02208A	BRACKET-GUIDE MAIN;Bordeaux 26,SECC,T1.2	1	SNA
...3		BN61-02209A	BRACKET-PLATE;Bordeaux 26,SECC,T1.2,RIGH	1	SNA
...3		BN61-02210A	BRACKET-GUIDE POWER;Bordeaux 26,SECC,T1.	1	SNA
...3		BN61-02394A	BRACKET-PLATE;CAMBRIDGE26,SECC,T1.2	1	SNA
...3	M0131	AA63-01437A	GASKET;Bordeaux,Conductive Fabric,20mm,9	1	SNA
...3	M0131	AA63-01438A	GASKET;Bordeaux,Conductive Fabric,7mm,8m	1	SNA
..2	M0114	BN61-02500A	HOLDER-WIRE;NYLON6.6,NATURAL	2	SNA
..2		BN96-03590A	ASSY SHIELD P-PCB MAIN;CAMBRIDGE32,SECC	1	SNA
...3	T0603	BN63-02458A	SHIELD-PCB MAIN;CAMBRIDGE 32,SECC,T0.5,U	1	SNA
...3	M0131	BN63-02627A	GASKET;Oxford,Conductive Fabric,8,13,30,	1	SNA
1	M0045	BN92-01661K	ASSY ACCESSORY;LE26R73BDX/XEE,STOCKHOLM	1	SNA
..2	M0045	BN96-02984K	ASSY ACCESSORY;LE26R73BDX/XEE	1	SA
...3	T0268	3903-000145	CBF-POWER CORD;DT,EU,FP3/YES,U(IEC C13-R	1	SA
...3	T0524	6902-000110	BAG PE;LDPE,T0.05,W250,L400,TRP,28,2	2	SNA
...3	ACCESSORY	AA68-03242E	MANUAL FLYER-01,SAFETY GUIDE;All Model,S	1	SNA
...3	ACCESSORY	AA68-03575A	MANUAL FLYER-01,REGISTRATION C;XEU,ENG,U	1	SNA
...3	T0074	BN59-00516A	REMOCON;CAMBRIDGE,TM87B,45,CAMBRIDGE,EUR	1	SA
...3	ACCESSORY	BN63-01798A	CLOTH-CLEAN;RE40**,CLOTH,310,320,RHCM	1	SNA
...3	T0531	BN63-02323A	COVER-BOTTOM;23,26,32R71,ABS+PMMA,HB,BK2	1	SNA
...3	ACCESSORY	BN68-00514A	MANUAL FLYER-04,WARRANTY CARD;PDP/LCD TV	1	SNA
...3	T0059	BN68-00895A	MANUAL FLYER-CARD;COMM,SAMSUNG,W/P 5G,PR	1	SNA
...3	T0059	BN68-00907A	MANUAL FLYER-CARD;COMM,SAMSUNG,18 LANG,E	1	SNA
...3	T0511	BN68-01007D	MANUAL USERS;COMM,SAMSUNG,Eng/Swe,Sweden	1	SNA
...3	ACCESSORY	BN69-01086A	BOX ACCESSORY-00;COMM,SW1,YEL,-,W573,D63	1	SNA
...3	M0045	BN96-01800A	ASSY ACCESSORY;ROME32,SCREW	1	SA
....4	T0081	6002-001294	SCREW-TAPPING;BH,+,,M4,L16,ZPC(BLK)	4	SA
....4	ACCESSORY	6902-000128	BAG ZIPPER;LDPE,T0.05,W200,L150,TRP,8,2-	1	SNA
1	M0113	BN92-01666A	ASSY P/MATERIAL;26R71,BORDEAUX	1	SNA
..2	T0376	6902-000061	BAG AIR;LDPE,T0.2,L1000,W500,TRP,,,	0.031	SNA
..2	T0524	6902-000358	BAG PE;HDPE/NITRON(DOUBLE),T0.02/T0.5,W9	1	SNA
..2	T0376	6902-000379	BAG AIR;LDPE,T0.2,W1000,L1800,TRP,-,--	0.005	SNA
..2	T0081	6902-000604	BAG WRAPPING;LDPE,T0.02,W500,L10000,TRP,	4.02	SNA
1	M0003	BN92-01668D	ASSY BOX;26R73,EO(XEE),CAMBRIDGE	1	SNA
..2		BN69-01263H	BOX-01,SET;26R73,DY-01,AB,YEL,A1,IDTV(GE	1.02	SNA
1	M0019	BN92-01801U	ASSY LABEL;LE26R73BDX/XEE	1	SNA

ELECTRONIC SERVICE TIRGOVISTE

6-2 LE32R73BDX/XEU Parts List

Level	Loc. No.	Code No.	Description & Specification	Q'ty	SA/SNA
0		LE32R73BDX/XEU	LE32R73BD,R62A/32R70-GCB,32,LCD-TV,UNITE	0	
1	M0001	BN90-00840C	ASSY COVER FRONT;32R73,EO,CAMBRIDGE	1	SNA
..2	T0003	BN96-02996E	ASSY COVER P-FRONT;32R73,EO,ABS+PMMA,HB,	1	SA
...3	M0081	6003-001003	SCREW-TAPTITE;BH,+,B,M4,L12,ZPC(BLK),SWR	2	SNA
...3	M0081	6003-001003	SCREW-TAPTITE;BH,+,B,M4,L12,ZPC(BLK),SWR	2	SNA
...3	T0060	BN61-01655A	SPRING ETC;STS-304 SUS,D8,L12,T0.5	1	SA
...3	C/F	BN63-02183F	COVER-SHEET;Rhcm,PE Vinyl,T0.05,900mm,20	1.48	SNA
...3	M0112	BN63-02318E	COVER-FRONT;32R73,EO,ABS+PMMA,HB,BK23,S/	1	SNA
...3	T0056	BN63-02320A	COVER-DECORATION;32R71,HIPS,HB,GR503,BLM	1	SNA
...3	T0023	BN64-00342A	KNOB POWER;ROME,40,PC,VIOLET	1	SNA
...3	T0059	BN64-00366A	INDICATOR LED;ROME-I,PC,CLEAR,ALL MODEL	1	SNA
...3	T0054	BN64-00443A	KNOB-DECORATION;32R71,ABS,HB,GR503,VACUU	1	SNA
...3	T0061	BN64-00453A	WINDOW-REMOCON;32R71,PC,V0,VIOLET,DIFFUS	1	SNA
...3		BN96-03404A	ASSY BOARD P-FUNCTION&KNOB;Bordeaux,CT50	1	SNA
....4	T0022	BN64-00442A	KNOB CONTROL;26,32,40R71,PC,BLK,ACRYL CL	1	SNA
....4	M0145	BN96-03045A	ASSY BOARD P-FUNCTION;BORDEAUX,FUNCTION	1	SA
...3	M0146	BN96-03405A	ASSY BOARD P-POWER;BORDEAUX1,CT5000-4140	1	SA
...3	CIS	BN63-01151A	FELT-NON WOVEN;MM17NS,T0.5,393,10,BLACK	2	SNA
...3	T0069	BP60-00015D	SPACER-FELT;617W,FELT,L760,T0.5,W10	2	SNA
..2	T0175	BN96-03002A	ASSY SPEAKER P;8ohm,Bordeuax 32"/37"/40"	1	SA
..2	T0175	BN96-03003A	ASSY SPEAKER P;8ohm,Bordeuax 32"/37"/40"	1	SA
1	M0216	BN90-00842A	ASSY STAND;32R71,BORDEAUX	1	SNA
..2	M0013	BN96-02998A	ASSY STAND P-BASE;32R71,ABS+PMMA,HB,BK23	1	SA
...3	T0081	6002-001294	SCREW-TAPPING;BH,+,,M4,L16,ZPC(BLK)	4	SA
...3	M0081	6003-001239	SCREW-TAPTITE;FH,+,B,M4,L10,ZPC(YEL),SWR	4	SA
...3		BN61-02192A	GUIDE-STAND;26,32R71,ABS,V0,BLK	1	SNA
...3		BN61-02204A	HOLDER-SWIVEL RING;26,32R71,ACETAL,BLK	1	SNA
...3		BN61-02232A	HOLDER-SWIVEL RING;32R71,ACETAL NATUAL,T	1	SNA
...3		BN61-02233A	HOLDER-SWIVEL RING;32R71,ACETAL NATUAL,B	1	SNA
...3		BN61-02235A	BRACKET-STAND BOTTOM;BORDEAUX 32,SECC,T2	1	SNA
...3		BN61-02236A	BRACKET-HINGE SWIVEL;BORDEAUX 32,SECC,T1	1	SNA
...3	T0004	BN63-02321A	COVER-STAND BASE;32R71,ABS+PMMA,HB,BK23,	1	SNA
...3		BN63-02322A	COVER-STAND SUB;32R71,ABS+PMMA,HB,BK23,H	1	SNA
...3	T0132	BN73-00052A	RUBBER FOOT;ARES 17,SILICON,DIA 17 * T1.	8	SNA
...3	STAND	BN63-02183D	COVER-SHEET;Rhcm,PE Vinyl,T0.05,680mm,20	0.4	SNA
...3	T0514	BN61-02367A	BRACKET-SUPPORT;BORDEAUX 32,SECC,T2.0	1	SNA
..2	T0524	6902-000241	BAG PE;NITRON/HDPE,T0.5/T0.012,W600,L600	1	SNA
1	M0002	BN90-00873A	ASSY COVER REAR;32R73,EO,CAMBRIDGE	1	SNA
..2	T0081	6002-001294	SCREW-TAPPING;BH,+,,M4,L16,ZPC(BLK)	2	SA
..2	T0081	6002-001294	SCREW-TAPPING;BH,+,,M4,L16,ZPC(BLK)	13	SA
..2	M0013	BN96-03244A	ASSY COVER P-REAR;32R73,EO,ABS+PMMA,HB,B	1	SA
...3	T0101	BN61-02032A	BRACKET-WALL;32,MGM,SECC,T1.6	2	SNA
...3	M0006	BN63-02455A	COVER-REAR;32R73,EO,ABS+PMMA,HB,BK23,H/G	1	SNA
...3	T0071	BN64-00444F	INLAY-TERMINAL;CAMBRIDGE32,37,40,PS SHEE	1	SNA
...3		BN63-02183F	COVER-SHEET;Rhcm,PE Vinyl,T0.05,900mm,20	0.7	SNA
...3	T0064	BN65-00002A	CLAMPER CORE;BORDEAUX,PP,V0,BLK	1	SNA
1	M0017	BN91-01006A	ASSY CHASSIS;LE32R73BDX/XEU,32",CAMBRIDG	1	SA
..2	T0422	BN94-00867A	ASSY PCB MISC-DTV MODULE;LE32R73BDX/XEU,	1	SNA
...3	T0245	0202-001522	SOLDER-WIRE FLUX;LFA3-107,-,D1.2,96.5Sn/	0.003	SNA
...3	CN902	3703-001124	CONNECTOR-BACK PANEL;32P,2R,MALE,ANGLE,A	1	SA
...3	CN902	3703-001124	CONNECTOR-BACK PANEL;32P,2R,MALE,ANGLE,A	1	SA
...3	DJ301	3709-001346	CONNECTOR-CARD SLOT;68P,0.27mm,ANGLE,AU1	1	SA
...3	DJ402	3722-001055	JACK-PHONE;5P/2C,AG,BLK,ANGLE	1	SA
...3		BN97-00831A	ASSY SMD-DTV MODULE;LE32R73BDX/XEU,CAMBR	1	SNA
....4	CIS05	0202-001477	SOLDER-CREAM;LST309-M,-,D20~45§-,96.5Sn/	0.465	SNA
....4	DQ701	0501-000434	TR-SMALL SIGNAL;KTC3875S-GR,NPN,150mW,SO	1	SA

ELECTRONIC SERVICE TIRGOVISTE

Level	Loc. No.	Code No.	Description & Specification	Q'ty	SA/SNA
....4	DQ401	0501-000669	TR-SMALL SIGNAL;KTA1505Y,PNP,150mW,SOT-2	1	SA
....4	DQ402	0501-000669	TR-SMALL SIGNAL;KTA1505Y,PNP,150mW,SOT-2	1	SA
....4	DQ703	0501-000669	TR-SMALL SIGNAL;KTA1505Y,PNP,150mW,SOT-2	1	SA
....4	DQ704	0501-000669	TR-SMALL SIGNAL;KTA1505Y,PNP,150mW,SOT-2	1	SA
....4	IC104	0801-002095	IC-CMOS LOGIC;74LCX245,TRANSCEIVER,TSSOP	1	SA
....4	IC104	0801-002237	IC-CMOS LOGIC;74V(A)HC1G04,INVERTER,SC70	1	SA
....4	IC104	0801-002394	IC-CMOS LOGIC;74LCX32,OR GATE,SOIC,14P,1	1	SA
....4	IC104	0801-002407	IC-CMOS LOGIC;74LCX08,AND GATE,SOIC,14P,	1	SA
....4	IC104	0801-002683	IC-CMOS LOGIC;74HCT245,TRANSCEIVER,TSSOP	1	SA
....4	IC104	0801-002709	IC-CMOS LOGIC;74HC373,D FLIP-FLOP,TSSOP,	1	SA
....4	IC104	0801-002709	IC-CMOS LOGIC;74HC373,D FLIP-FLOP,TSSOP,	1	SA
....4	IC107	1002-001227	IC-D/A CONVERTER;CS4340-KSR,24BIT,SOP,16	1	SA
....4	DU402	1006-001165	IC-LINE TRANSCEIVER;MAX3243CDBR,SSOP,28P	1	SA
....4	IC113	1105-001305	IC-DRAM;4S641632,-,64MBIT,1MX16X4BIT,TSO	1	SA
....4	IC113	1105-001308	IC-DRAM;K4S281632,128Mbit,8Mx16,TSOP,54P	1	SA
....4	DU701	1203-001824	IC-VOL. DETECTOR;7042,SOT-89,3P,-,PLASTI	1	SA
....4	T0087	1203-002842	IC-POSI.FIXED REG.;AP1117D-33A,TO-252,3P	1	SA
....4	DU101	1204-002400	IC-DECODER;STI5517SUA,PBGA,416P,27x27mm,	1	SA
....4	DR155	2007-000052	R-CHIP;10Kohm,1%,1/10W,TP,1608	1	SA
....4	DR156	2007-000052	R-CHIP;10Kohm,1%,1/10W,TP,1608	1	SA
....4	DR140	2007-000070	R-CHIP;0ohm,5%,1/10W,TP,1608	1	SA
....4	DR154	2007-000070	R-CHIP;0ohm,5%,1/10W,TP,1608	1	SA
....4	DR158	2007-000070	R-CHIP;0ohm,5%,1/10W,TP,1608	1	SA
....4	DR159	2007-000070	R-CHIP;0ohm,5%,1/10W,TP,1608	1	SA
....4	DR811	2007-000070	R-CHIP;0ohm,5%,1/10W,TP,1608	1	SA
....4	DR812	2007-000070	R-CHIP;0ohm,5%,1/10W,TP,1608	1	SA
....4	DR907	2007-000070	R-CHIP;0ohm,5%,1/10W,TP,1608	1	SA
....4	OR112	2007-000070	R-CHIP;0ohm,5%,1/10W,TP,1608	1	SA
....4	OR113	2007-000070	R-CHIP;0ohm,5%,1/10W,TP,1608	1	SA
....4	DR1102	2007-000072	R-CHIP;47ohm,5%,1/10W,TP,1608	1	SA
....4	DR111	2007-000072	R-CHIP;47ohm,5%,1/10W,TP,1608	1	SA
....4	DR116	2007-000072	R-CHIP;47ohm,5%,1/10W,TP,1608	1	SA
....4	DR169	2007-000072	R-CHIP;47ohm,5%,1/10W,TP,1608	1	SA
....4	DR170	2007-000072	R-CHIP;47ohm,5%,1/10W,TP,1608	1	SA
....4	DR174	2007-000072	R-CHIP;47ohm,5%,1/10W,TP,1608	1	SA
....4	DR176	2007-000072	R-CHIP;47ohm,5%,1/10W,TP,1608	1	SA
....4	DR182	2007-000072	R-CHIP;47ohm,5%,1/10W,TP,1608	1	SA
....4	DR183	2007-000072	R-CHIP;47ohm,5%,1/10W,TP,1608	1	SA
....4	DR184	2007-000072	R-CHIP;47ohm,5%,1/10W,TP,1608	1	SA
....4	DR185	2007-000072	R-CHIP;47ohm,5%,1/10W,TP,1608	1	SA
....4	DR186	2007-000072	R-CHIP;47ohm,5%,1/10W,TP,1608	1	SA
....4	DR187	2007-000072	R-CHIP;47ohm,5%,1/10W,TP,1608	1	SA
....4	DR195	2007-000072	R-CHIP;47ohm,5%,1/10W,TP,1608	1	SA
....4	DR196	2007-000072	R-CHIP;47ohm,5%,1/10W,TP,1608	1	SA
....4	DR197	2007-000072	R-CHIP;47ohm,5%,1/10W,TP,1608	1	SA
....4	DR198	2007-000072	R-CHIP;47ohm,5%,1/10W,TP,1608	1	SA
....4	DR199	2007-000072	R-CHIP;47ohm,5%,1/10W,TP,1608	1	SA
....4	DR202	2007-000072	R-CHIP;47ohm,5%,1/10W,TP,1608	1	SA
....4	DR203	2007-000072	R-CHIP;47ohm,5%,1/10W,TP,1608	1	SA
....4	DR204	2007-000072	R-CHIP;47ohm,5%,1/10W,TP,1608	1	SA
....4	DR501	2007-000072	R-CHIP;47ohm,5%,1/10W,TP,1608	1	SA
....4	DR902	2007-000072	R-CHIP;47ohm,5%,1/10W,TP,1608	1	SA
....4	DR905	2007-000072	R-CHIP;47ohm,5%,1/10W,TP,1608	1	SA
....4	DR906	2007-000072	R-CHIP;47ohm,5%,1/10W,TP,1608	1	SA
....4	DR916	2007-000072	R-CHIP;47ohm,5%,1/10W,TP,1608	1	SA
....4	DR917	2007-000072	R-CHIP;47ohm,5%,1/10W,TP,1608	1	SA
....4	DR923	2007-000072	R-CHIP;47ohm,5%,1/10W,TP,1608	1	SA
....4	DR104	2007-000074	R-CHIP;100ohm,5%,1/10W,TP,1608	1	SA
....4	DR105	2007-000074	R-CHIP;100ohm,5%,1/10W,TP,1608	1	SA
....4	DR1101	2007-000074	R-CHIP;100ohm,5%,1/10W,TP,1608	1	SA

ELECTRONIC SERVICE TIRGOVISTE

Level	Loc. No.	Code No.	Description & Specification	Q'ty	SA/SNA
....4	DR112	2007-000074	R-CHIP;100ohm,5%,1/10W,TP,1608	1	SA
....4	DR113	2007-000074	R-CHIP;100ohm,5%,1/10W,TP,1608	1	SA
....4	DR118	2007-000074	R-CHIP;100ohm,5%,1/10W,TP,1608	1	SA
....4	DR119	2007-000074	R-CHIP;100ohm,5%,1/10W,TP,1608	1	SA
....4	DR120	2007-000074	R-CHIP;100ohm,5%,1/10W,TP,1608	1	SA
....4	DR121	2007-000074	R-CHIP;100ohm,5%,1/10W,TP,1608	1	SA
....4	DR122	2007-000074	R-CHIP;100ohm,5%,1/10W,TP,1608	1	SA
....4	DR123	2007-000074	R-CHIP;100ohm,5%,1/10W,TP,1608	1	SA
....4	DR124	2007-000074	R-CHIP;100ohm,5%,1/10W,TP,1608	1	SA
....4	DR125	2007-000074	R-CHIP;100ohm,5%,1/10W,TP,1608	1	SA
....4	DR126	2007-000074	R-CHIP;100ohm,5%,1/10W,TP,1608	1	SA
....4	DR127	2007-000074	R-CHIP;100ohm,5%,1/10W,TP,1608	1	SA
....4	DR128	2007-000074	R-CHIP;100ohm,5%,1/10W,TP,1608	1	SA
....4	DR129	2007-000074	R-CHIP;100ohm,5%,1/10W,TP,1608	1	SA
....4	DR130	2007-000074	R-CHIP;100ohm,5%,1/10W,TP,1608	1	SA
....4	DR131	2007-000074	R-CHIP;100ohm,5%,1/10W,TP,1608	1	SA
....4	DR137	2007-000074	R-CHIP;100ohm,5%,1/10W,TP,1608	1	SA
....4	DR138	2007-000074	R-CHIP;100ohm,5%,1/10W,TP,1608	1	SA
....4	DR145	2007-000074	R-CHIP;100ohm,5%,1/10W,TP,1608	1	SA
....4	DR146	2007-000074	R-CHIP;100ohm,5%,1/10W,TP,1608	1	SA
....4	DR147	2007-000074	R-CHIP;100ohm,5%,1/10W,TP,1608	1	SA
....4	DR148	2007-000074	R-CHIP;100ohm,5%,1/10W,TP,1608	1	SA
....4	DR149	2007-000074	R-CHIP;100ohm,5%,1/10W,TP,1608	1	SA
....4	DR150	2007-000074	R-CHIP;100ohm,5%,1/10W,TP,1608	1	SA
....4	DR151	2007-000074	R-CHIP;100ohm,5%,1/10W,TP,1608	1	SA
....4	DR152	2007-000074	R-CHIP;100ohm,5%,1/10W,TP,1608	1	SA
....4	DR160	2007-000074	R-CHIP;100ohm,5%,1/10W,TP,1608	1	SA
....4	DR161	2007-000074	R-CHIP;100ohm,5%,1/10W,TP,1608	1	SA
....4	DR166	2007-000074	R-CHIP;100ohm,5%,1/10W,TP,1608	1	SA
....4	DR171	2007-000074	R-CHIP;100ohm,5%,1/10W,TP,1608	1	SA
....4	DR172	2007-000074	R-CHIP;100ohm,5%,1/10W,TP,1608	1	SA
....4	DR175	2007-000074	R-CHIP;100ohm,5%,1/10W,TP,1608	1	SA
....4	DR180	2007-000074	R-CHIP;100ohm,5%,1/10W,TP,1608	1	SA
....4	DR181	2007-000074	R-CHIP;100ohm,5%,1/10W,TP,1608	1	SA
....4	DR200	2007-000074	R-CHIP;100ohm,5%,1/10W,TP,1608	1	SA
....4	DR201	2007-000074	R-CHIP;100ohm,5%,1/10W,TP,1608	1	SA
....4	DR221	2007-000074	R-CHIP;100ohm,5%,1/10W,TP,1608	1	SA
....4	DR400	2007-000074	R-CHIP;100ohm,5%,1/10W,TP,1608	1	SA
....4	DR401	2007-000074	R-CHIP;100ohm,5%,1/10W,TP,1608	1	SA
....4	DR402	2007-000074	R-CHIP;100ohm,5%,1/10W,TP,1608	1	SA
....4	DR403	2007-000074	R-CHIP;100ohm,5%,1/10W,TP,1608	1	SA
....4	DR404	2007-000074	R-CHIP;100ohm,5%,1/10W,TP,1608	1	SA
....4	DR405	2007-000074	R-CHIP;100ohm,5%,1/10W,TP,1608	1	SA
....4	DR406	2007-000074	R-CHIP;100ohm,5%,1/10W,TP,1608	1	SA
....4	DR407	2007-000074	R-CHIP;100ohm,5%,1/10W,TP,1608	1	SA
....4	DR419	2007-000074	R-CHIP;100ohm,5%,1/10W,TP,1608	1	SA
....4	DR704	2007-000074	R-CHIP;100ohm,5%,1/10W,TP,1608	1	SA
....4	DR162	2007-000076	R-CHIP;330ohm,5%,1/10W,TP,1608	1	SA
....4	DR163	2007-000076	R-CHIP;330ohm,5%,1/10W,TP,1608	1	SA
....4	DR164	2007-000076	R-CHIP;330ohm,5%,1/10W,TP,1608	1	SA
....4	DR165	2007-000076	R-CHIP;330ohm,5%,1/10W,TP,1608	1	SA
....4	DR502	2007-000078	R-CHIP;1Kohm,5%,1/10W,TP,1608	1	SA
....4	DR503	2007-000078	R-CHIP;1Kohm,5%,1/10W,TP,1608	1	SA
....4	DR505	2007-000078	R-CHIP;1Kohm,5%,1/10W,TP,1608	1	SA
....4	DR702	2007-000078	R-CHIP;1Kohm,5%,1/10W,TP,1608	1	SA
....4	DR114	2007-000084	R-CHIP;4.7Kohm,5%,1/10W,TP,1608	1	SA
....4	DR139	2007-000084	R-CHIP;4.7Kohm,5%,1/10W,TP,1608	1	SA
....4	DR141	2007-000084	R-CHIP;4.7Kohm,5%,1/10W,TP,1608	1	SA
....4	DR142	2007-000084	R-CHIP;4.7Kohm,5%,1/10W,TP,1608	1	SA
....4	DR143	2007-000084	R-CHIP;4.7Kohm,5%,1/10W,TP,1608	1	SA

ELECTRONIC SERVICE TIRGOVISTE

Level	Loc. No.	Code No.	Description & Specification	Q'ty	SA/SNA
....4	DR144	2007-000084	R-CHIP;4.7Kohm,5%,1/10W,TP,1608	1	SA
....4	DR153	2007-000084	R-CHIP;4.7Kohm,5%,1/10W,TP,1608	1	SA
....4	DR417	2007-000084	R-CHIP;4.7Kohm,5%,1/10W,TP,1608	1	SA
....4	DR418	2007-000084	R-CHIP;4.7Kohm,5%,1/10W,TP,1608	1	SA
....4	DR701	2007-000084	R-CHIP;4.7Kohm,5%,1/10W,TP,1608	1	SA
....4	DR703	2007-000084	R-CHIP;4.7Kohm,5%,1/10W,TP,1608	1	SA
....4	DR705	2007-000084	R-CHIP;4.7Kohm,5%,1/10W,TP,1608	1	SA
....4	DR707	2007-000084	R-CHIP;4.7Kohm,5%,1/10W,TP,1608	1	SA
....4	DR117	2007-000090	R-CHIP;10Kohm,5%,1/10W,TP,1608	1	SA
....4	DR177	2007-000090	R-CHIP;10Kohm,5%,1/10W,TP,1608	1	SA
....4	DR178	2007-000090	R-CHIP;10Kohm,5%,1/10W,TP,1608	1	SA
....4	DR179	2007-000090	R-CHIP;10Kohm,5%,1/10W,TP,1608	1	SA
....4	DR188	2007-000090	R-CHIP;10Kohm,5%,1/10W,TP,1608	1	SA
....4	DR189	2007-000090	R-CHIP;10Kohm,5%,1/10W,TP,1608	1	SA
....4	DR190	2007-000090	R-CHIP;10Kohm,5%,1/10W,TP,1608	1	SA
....4	DR191	2007-000090	R-CHIP;10Kohm,5%,1/10W,TP,1608	1	SA
....4	DR192	2007-000090	R-CHIP;10Kohm,5%,1/10W,TP,1608	1	SA
....4	DR193	2007-000090	R-CHIP;10Kohm,5%,1/10W,TP,1608	1	SA
....4	DR194	2007-000090	R-CHIP;10Kohm,5%,1/10W,TP,1608	1	SA
....4	DR416	2007-000090	R-CHIP;10Kohm,5%,1/10W,TP,1608	1	SA
....4	DR423	2007-000090	R-CHIP;10Kohm,5%,1/10W,TP,1608	1	SA
....4	DR424	2007-000090	R-CHIP;10Kohm,5%,1/10W,TP,1608	1	SA
....4	DR632	2007-000090	R-CHIP;10Kohm,5%,1/10W,TP,1608	1	SA
....4	DR633	2007-000090	R-CHIP;10Kohm,5%,1/10W,TP,1608	1	SA
....4	DR901	2007-000090	R-CHIP;10Kohm,5%,1/10W,TP,1608	1	SA
....4	DR903	2007-000090	R-CHIP;10Kohm,5%,1/10W,TP,1608	1	SA
....4	DR904	2007-000090	R-CHIP;10Kohm,5%,1/10W,TP,1608	1	SA
....4	DR918	2007-000090	R-CHIP;10Kohm,5%,1/10W,TP,1608	1	SA
....4	DR919	2007-000090	R-CHIP;10Kohm,5%,1/10W,TP,1608	1	SA
....4	DR920	2007-000090	R-CHIP;10Kohm,5%,1/10W,TP,1608	1	SA
....4	DR921	2007-000090	R-CHIP;10Kohm,5%,1/10W,TP,1608	1	SA
....4	DR922	2007-000090	R-CHIP;10Kohm,5%,1/10W,TP,1608	1	SA
....4	DR700	2007-000097	R-CHIP;47Kohm,5%,1/10W,TP,1608	1	SA
....4	DR706	2007-000097	R-CHIP;47Kohm,5%,1/10W,TP,1608	1	SA
....4	DR102	2007-000102	R-CHIP;100Kohm,5%,1/10W,TP,1608	1	SA
....4	DR408	2007-000113	R-CHIP;33ohm,5%,1/10W,TP,1608	1	SA
....4	DR409	2007-000113	R-CHIP;33ohm,5%,1/10W,TP,1608	1	SA
....4	DR410	2007-000113	R-CHIP;33ohm,5%,1/10W,TP,1608	1	SA
....4	DR411	2007-000113	R-CHIP;33ohm,5%,1/10W,TP,1608	1	SA
....4	DR412	2007-000113	R-CHIP;33ohm,5%,1/10W,TP,1608	1	SA
....4	DR413	2007-000113	R-CHIP;33ohm,5%,1/10W,TP,1608	1	SA
....4	DR414	2007-000113	R-CHIP;33ohm,5%,1/10W,TP,1608	1	SA
....4	DR415	2007-000113	R-CHIP;33ohm,5%,1/10W,TP,1608	1	SA
....4	DR601	2007-000113	R-CHIP;33ohm,5%,1/10W,TP,1608	1	SA
....4	DR908	2007-000113	R-CHIP;33ohm,5%,1/10W,TP,1608	1	SA
....4	DR909	2007-000113	R-CHIP;33ohm,5%,1/10W,TP,1608	1	SA
....4	DR910	2007-000113	R-CHIP;33ohm,5%,1/10W,TP,1608	1	SA
....4	DR911	2007-000113	R-CHIP;33ohm,5%,1/10W,TP,1608	1	SA
....4	DR912	2007-000113	R-CHIP;33ohm,5%,1/10W,TP,1608	1	SA
....4	DR913	2007-000113	R-CHIP;33ohm,5%,1/10W,TP,1608	1	SA
....4	DR914	2007-000113	R-CHIP;33ohm,5%,1/10W,TP,1608	1	SA
....4	DR915	2007-000113	R-CHIP;33ohm,5%,1/10W,TP,1608	1	SA
....4	DR999	2007-000113	R-CHIP;33ohm,5%,1/10W,TP,1608	1	SA
....4	DR101	2007-000119	R-CHIP;560ohm,5%,1/10W,TP,1608	1	SA
....4	DR173	2007-000372	R-CHIP;130ohm,5%,1/10W,TP,1608	1	SA
....4	DR205	2007-000372	R-CHIP;130ohm,5%,1/10W,TP,1608	1	SA
....4	DR132	2007-000539	R-CHIP;200ohm,5%,1/10W,TP,1608	1	SA
....4	DR133	2007-000539	R-CHIP;200ohm,5%,1/10W,TP,1608	1	SA
....4	DR134	2007-000539	R-CHIP;200ohm,5%,1/10W,TP,1608	1	SA
....4	DR135	2007-000539	R-CHIP;200ohm,5%,1/10W,TP,1608	1	SA

ELECTRONIC SERVICE TIRGOVISTE

Level	Loc. No.	Code No.	Description & Specification	Q'ty	SA/SNA
....4	DR167	2007-000539	R-CHIP;200ohm,5%,1/10W,TP,1608	1	SA
....4	DR800	2007-000763	R-CHIP;330ohm,1%,1/10W,TP,1608	1	SA
....4	DR801	2007-000763	R-CHIP;330ohm,1%,1/10W,TP,1608	1	SA
....4	DR802	2007-000763	R-CHIP;330ohm,1%,1/10W,TP,1608	1	SA
....4	DR803	2007-000763	R-CHIP;330ohm,1%,1/10W,TP,1608	1	SA
....4	DR804	2007-000763	R-CHIP;330ohm,1%,1/10W,TP,1608	1	SA
....4	DR805	2007-000763	R-CHIP;330ohm,1%,1/10W,TP,1608	1	SA
....4	DR806	2007-000763	R-CHIP;330ohm,1%,1/10W,TP,1608	1	SA
....4	DR807	2007-000763	R-CHIP;330ohm,1%,1/10W,TP,1608	1	SA
....4	DR420	2007-001167	R-CHIP;75ohm,5%,1/10W,TP,1608	1	SA
....4	DR421	2007-001167	R-CHIP;75ohm,5%,1/10W,TP,1608	1	SA
....4	DRA103	2011-001011	R-NET;10Kohm,5%,1/16W,L,CHIP,8P,TP,3.2x1	1	SA
....4	DRA401	2011-001011	R-NET;10Kohm,5%,1/16W,L,CHIP,8P,TP,3.2x1	1	SA
....4	DRA108	2011-001410	R-NET;120OHM,5%,1/16W,L,CHIP,8P,TP,3.2X1	1	SA
....4	DRA109	2011-001410	R-NET;120OHM,5%,1/16W,L,CHIP,8P,TP,3.2X1	1	SA
....4	DRA110	2011-001410	R-NET;120OHM,5%,1/16W,L,CHIP,8P,TP,3.2X1	1	SA
....4	DRA111	2011-001410	R-NET;120OHM,5%,1/16W,L,CHIP,8P,TP,3.2X1	1	SA
....4	DRA112	2011-001410	R-NET;120OHM,5%,1/16W,L,CHIP,8P,TP,3.2X1	1	SA
....4	DRA113	2011-001410	R-NET;120OHM,5%,1/16W,L,CHIP,8P,TP,3.2X1	1	SA
....4	DRA114	2011-001410	R-NET;120OHM,5%,1/16W,L,CHIP,8P,TP,3.2X1	1	SA
....4	DRA115	2011-001410	R-NET;120OHM,5%,1/16W,L,CHIP,8P,TP,3.2X1	1	SA
....4	DRA116	2011-001410	R-NET;120OHM,5%,1/16W,L,CHIP,8P,TP,3.2X1	1	SA
....4	DRA117	2011-001410	R-NET;120OHM,5%,1/16W,L,CHIP,8P,TP,3.2X1	1	SA
....4	DRA118	2011-001410	R-NET;120OHM,5%,1/16W,L,CHIP,8P,TP,3.2X1	1	SA
....4	DRA119	2011-001410	R-NET;120OHM,5%,1/16W,L,CHIP,8P,TP,3.2X1	1	SA
....4	DRA120	2011-001410	R-NET;120OHM,5%,1/16W,L,CHIP,8P,TP,3.2X1	1	SA
....4	DRA121	2011-001410	R-NET;120OHM,5%,1/16W,L,CHIP,8P,TP,3.2X1	1	SA
....4	DRA122	2011-001410	R-NET;120OHM,5%,1/16W,L,CHIP,8P,TP,3.2X1	1	SA
....4	DRA123	2011-001410	R-NET;120OHM,5%,1/16W,L,CHIP,8P,TP,3.2X1	1	SA
....4	DRA124	2011-001410	R-NET;120OHM,5%,1/16W,L,CHIP,8P,TP,3.2X1	1	SA
....4	DRA125	2011-001410	R-NET;120OHM,5%,1/16W,L,CHIP,8P,TP,3.2X1	1	SA
....4	DC100	2203-000257	C-CER,CHIP;10nF,10%,50V,X7R,1608	1	SA
....4	DC102	2203-000257	C-CER,CHIP;10nF,10%,50V,X7R,1608	1	SA
....4	DC105	2203-000257	C-CER,CHIP;10nF,10%,50V,X7R,1608	1	SA
....4	DC107	2203-000257	C-CER,CHIP;10nF,10%,50V,X7R,1608	1	SA
....4	DC109	2203-000257	C-CER,CHIP;10nF,10%,50V,X7R,1608	1	SA
....4	DC111	2203-000257	C-CER,CHIP;10nF,10%,50V,X7R,1608	1	SA
....4	DC112	2203-000257	C-CER,CHIP;10nF,10%,50V,X7R,1608	1	SA
....4	DC114	2203-000257	C-CER,CHIP;10nF,10%,50V,X7R,1608	1	SA
....4	DC116	2203-000257	C-CER,CHIP;10nF,10%,50V,X7R,1608	1	SA
....4	DC118	2203-000257	C-CER,CHIP;10nF,10%,50V,X7R,1608	1	SA
....4	DC801	2203-000659	C-CER,CHIP;0.27nF,5%,50V,C0G,1608	1	SA
....4	DC804	2203-000659	C-CER,CHIP;0.27nF,5%,50V,C0G,1608	1	SA
....4	DC807	2203-000659	C-CER,CHIP;0.27nF,5%,50V,C0G,1608	1	SA
....4	DC810	2203-000659	C-CER,CHIP;0.27nF,5%,50V,C0G,1608	1	SA
....4	DC155	2203-001630	C-CER,CHIP;330nF,+80-20%,16V,Y5V,1608	1	SA
....4	DC700	2203-001630	C-CER,CHIP;330nF,+80-20%,16V,Y5V,1608	1	SA
....4	DC701	2203-001630	C-CER,CHIP;330nF,+80-20%,16V,Y5V,1608	1	SA
....4	DC101	2203-005005	C-CER,CHIP;100nF,10%,16V,X7R,1608	1	SA
....4	DC103	2203-005005	C-CER,CHIP;100nF,10%,16V,X7R,1608	1	SA
....4	DC104	2203-005005	C-CER,CHIP;100nF,10%,16V,X7R,1608	1	SA
....4	DC106	2203-005005	C-CER,CHIP;100nF,10%,16V,X7R,1608	1	SA
....4	DC108	2203-005005	C-CER,CHIP;100nF,10%,16V,X7R,1608	1	SA
....4	DC110	2203-005005	C-CER,CHIP;100nF,10%,16V,X7R,1608	1	SA
....4	DC113	2203-005005	C-CER,CHIP;100nF,10%,16V,X7R,1608	1	SA
....4	DC115	2203-005005	C-CER,CHIP;100nF,10%,16V,X7R,1608	1	SA
....4	DC117	2203-005005	C-CER,CHIP;100nF,10%,16V,X7R,1608	1	SA
....4	DC119	2203-005005	C-CER,CHIP;100nF,10%,16V,X7R,1608	1	SA
....4	DC120	2203-005005	C-CER,CHIP;100nF,10%,16V,X7R,1608	1	SA
....4	DC126	2203-005005	C-CER,CHIP;100nF,10%,16V,X7R,1608	1	SA

ELECTRONIC SERVICE TIBGOVISTE

Level	Loc. No.	Code No.	Description & Specification	Q'ty	SA/SNA
....4	DC127	2203-005005	C-CER,CHIP;100nF,10%,16V,X7R,1608	1	SA
....4	DC128	2203-005005	C-CER,CHIP;100nF,10%,16V,X7R,1608	1	SA
....4	DC129	2203-005005	C-CER,CHIP;100nF,10%,16V,X7R,1608	1	SA
....4	DC130	2203-005005	C-CER,CHIP;100nF,10%,16V,X7R,1608	1	SA
....4	DC131	2203-005005	C-CER,CHIP;100nF,10%,16V,X7R,1608	1	SA
....4	DC132	2203-005005	C-CER,CHIP;100nF,10%,16V,X7R,1608	1	SA
....4	DC133	2203-005005	C-CER,CHIP;100nF,10%,16V,X7R,1608	1	SA
....4	DC134	2203-005005	C-CER,CHIP;100nF,10%,16V,X7R,1608	1	SA
....4	DC135	2203-005005	C-CER,CHIP;100nF,10%,16V,X7R,1608	1	SA
....4	DC136	2203-005005	C-CER,CHIP;100nF,10%,16V,X7R,1608	1	SA
....4	DC137	2203-005005	C-CER,CHIP;100nF,10%,16V,X7R,1608	1	SA
....4	DC138	2203-005005	C-CER,CHIP;100nF,10%,16V,X7R,1608	1	SA
....4	DC139	2203-005005	C-CER,CHIP;100nF,10%,16V,X7R,1608	1	SA
....4	DC140	2203-005005	C-CER,CHIP;100nF,10%,16V,X7R,1608	1	SA
....4	DC141	2203-005005	C-CER,CHIP;100nF,10%,16V,X7R,1608	1	SA
....4	DC142	2203-005005	C-CER,CHIP;100nF,10%,16V,X7R,1608	1	SA
....4	DC143	2203-005005	C-CER,CHIP;100nF,10%,16V,X7R,1608	1	SA
....4	DC144	2203-005005	C-CER,CHIP;100nF,10%,16V,X7R,1608	1	SA
....4	DC145	2203-005005	C-CER,CHIP;100nF,10%,16V,X7R,1608	1	SA
....4	DC146	2203-005005	C-CER,CHIP;100nF,10%,16V,X7R,1608	1	SA
....4	DC147	2203-005005	C-CER,CHIP;100nF,10%,16V,X7R,1608	1	SA
....4	DC148	2203-005005	C-CER,CHIP;100nF,10%,16V,X7R,1608	1	SA
....4	DC149	2203-005005	C-CER,CHIP;100nF,10%,16V,X7R,1608	1	SA
....4	DC150	2203-005005	C-CER,CHIP;100nF,10%,16V,X7R,1608	1	SA
....4	DC151	2203-005005	C-CER,CHIP;100nF,10%,16V,X7R,1608	1	SA
....4	DC152	2203-005005	C-CER,CHIP;100nF,10%,16V,X7R,1608	1	SA
....4	DC153	2203-005005	C-CER,CHIP;100nF,10%,16V,X7R,1608	1	SA
....4	DC203	2203-005005	C-CER,CHIP;100nF,10%,16V,X7R,1608	1	SA
....4	DC400	2203-005005	C-CER,CHIP;100nF,10%,16V,X7R,1608	1	SA
....4	DC401	2203-005005	C-CER,CHIP;100nF,10%,16V,X7R,1608	1	SA
....4	DC402	2203-005005	C-CER,CHIP;100nF,10%,16V,X7R,1608	1	SA
....4	DC403	2203-005005	C-CER,CHIP;100nF,10%,16V,X7R,1608	1	SA
....4	DC404	2203-005005	C-CER,CHIP;100nF,10%,16V,X7R,1608	1	SA
....4	DC500	2203-005005	C-CER,CHIP;100nF,10%,16V,X7R,1608	1	SA
....4	DC501	2203-005005	C-CER,CHIP;100nF,10%,16V,X7R,1608	1	SA
....4	DC502	2203-005005	C-CER,CHIP;100nF,10%,16V,X7R,1608	1	SA
....4	DC503	2203-005005	C-CER,CHIP;100nF,10%,16V,X7R,1608	1	SA
....4	DC504	2203-005005	C-CER,CHIP;100nF,10%,16V,X7R,1608	1	SA
....4	DC505	2203-005005	C-CER,CHIP;100nF,10%,16V,X7R,1608	1	SA
....4	DC506	2203-005005	C-CER,CHIP;100nF,10%,16V,X7R,1608	1	SA
....4	DC507	2203-005005	C-CER,CHIP;100nF,10%,16V,X7R,1608	1	SA
....4	DC508	2203-005005	C-CER,CHIP;100nF,10%,16V,X7R,1608	1	SA
....4	DC509	2203-005005	C-CER,CHIP;100nF,10%,16V,X7R,1608	1	SA
....4	DC510	2203-005005	C-CER,CHIP;100nF,10%,16V,X7R,1608	1	SA
....4	DC511	2203-005005	C-CER,CHIP;100nF,10%,16V,X7R,1608	1	SA
....4	DC512	2203-005005	C-CER,CHIP;100nF,10%,16V,X7R,1608	1	SA
....4	DC513	2203-005005	C-CER,CHIP;100nF,10%,16V,X7R,1608	1	SA
....4	DC514	2203-005005	C-CER,CHIP;100nF,10%,16V,X7R,1608	1	SA
....4	DC601	2203-005005	C-CER,CHIP;100nF,10%,16V,X7R,1608	1	SA
....4	DC612	2203-005005	C-CER,CHIP;100nF,10%,16V,X7R,1608	1	SA
....4	DC614	2203-005005	C-CER,CHIP;100nF,10%,16V,X7R,1608	1	SA
....4	DC631	2203-005005	C-CER,CHIP;100nF,10%,16V,X7R,1608	1	SA
....4	DC632	2203-005005	C-CER,CHIP;100nF,10%,16V,X7R,1608	1	SA
....4	DC633	2203-005005	C-CER,CHIP;100nF,10%,16V,X7R,1608	1	SA
....4	DC902	2203-005005	C-CER,CHIP;100nF,10%,16V,X7R,1608	1	SA
....4	DC903	2203-005005	C-CER,CHIP;100nF,10%,16V,X7R,1608	1	SA
....4	DC905	2203-005005	C-CER,CHIP;100nF,10%,16V,X7R,1608	1	SA
....4	DC906	2203-005005	C-CER,CHIP;100nF,10%,16V,X7R,1608	1	SA
....4	DC907	2203-005005	C-CER,CHIP;100nF,10%,16V,X7R,1608	1	SA
....4	DC909	2203-005005	C-CER,CHIP;100nF,10%,16V,X7R,1608	1	SA

ELECTRONIC SERVICE TIRGOVISTE

Level	Loc. No.	Code No.	Description & Specification	Q'ty	SA/SNA
....4	DC910	2203-005005	C-CER,CHIP;100nF,10%,16V,X7R,1608	1	SA
....4	DC915	2203-005005	C-CER,CHIP;100nF,10%,16V,X7R,1608	1	SA
....4	DC916	2203-005005	C-CER,CHIP;100nF,10%,16V,X7R,1608	1	SA
....4	DC921	2203-005005	C-CER,CHIP;100nF,10%,16V,X7R,1608	1	SA
....4	DC922	2203-005005	C-CER,CHIP;100nF,10%,16V,X7R,1608	1	SA
....4	DC9906	2203-005005	C-CER,CHIP;100nF,10%,16V,X7R,1608	1	SA
....4	DC121	2402-000108	C-AL,SMD;10uF,20%,16V,WT,TP,4.3x4.3x5.2m	1	SA
....4	DC122	2402-000108	C-AL,SMD;10uF,20%,16V,WT,TP,4.3x4.3x5.2m	1	SA
....4	DC123	2402-000108	C-AL,SMD;10uF,20%,16V,WT,TP,4.3x4.3x5.2m	1	SA
....4	DC124	2402-000108	C-AL,SMD;10uF,20%,16V,WT,TP,4.3x4.3x5.2m	1	SA
....4	DC125	2402-000108	C-AL,SMD;10uF,20%,16V,WT,TP,4.3x4.3x5.2m	1	SA
....4	DC602	2402-000108	C-AL,SMD;10uF,20%,16V,WT,TP,4.3x4.3x5.2m	1	SA
....4	DC154	2402-001128	C-AL,SMD;100UF,20%,16V,WT,TP,6.3X5.7MM	1	SA
....4	DC522	2402-001128	C-AL,SMD;100UF,20%,16V,WT,TP,6.3X5.7MM	1	SA
....4	DC611	2402-001128	C-AL,SMD;100UF,20%,16V,WT,TP,6.3X5.7MM	1	SA
....4	DC634	2402-001128	C-AL,SMD;100UF,20%,16V,WT,TP,6.3X5.7MM	1	SA
....4	DC901	2402-001128	C-AL,SMD;100UF,20%,16V,WT,TP,6.3X5.7MM	1	SA
....4	DC904	2402-001128	C-AL,SMD;100UF,20%,16V,WT,TP,6.3X5.7MM	1	SA
....4	DC635	2402-001158	C-AL,SMD;1UF,20%,50V,WT,TP,4X5.2MM	1	SA
....4	DC636	2402-001158	C-AL,SMD;1UF,20%,50V,WT,TP,4X5.2MM	1	SA
....4	DC637	2402-001159	C-AL,SMD;3.3UF,20%,50V,WT,TP,4X5.2MM	1	SA
....4	DC638	2402-001159	C-AL,SMD;3.3UF,20%,50V,WT,TP,4X5.2MM	1	SA
....4	DC202	2402-001216	C-AL,SMD;470uF,20%,16V,WT,TP,10.3x10.3x1	1	SA
....4	DC613	2402-001216	C-AL,SMD;470uF,20%,16V,WT,TP,10.3x10.3x1	1	SA
....4	T0052	2703-000125	INDUCTOR-SMD;10uH,10%,2012	1	SA
....4	T0052	2703-000125	INDUCTOR-SMD;10uH,10%,2012	1	SA
....4	T0052	2703-000125	INDUCTOR-SMD;10uH,10%,2012	1	SA
....4	T0052	2703-000125	INDUCTOR-SMD;10uH,10%,2012	1	SA
....4	DX601	2806-001308	OSCILLATOR-VCXO;27MHZ,-,30PF,TP,3.3V,50M	1	SA
....4	T0568	3301-001569	BEAD-SMD;600ohm,2012,1000mA,TP,520ohm/90	1	SNA
....4	T0568	3301-001569	BEAD-SMD;600ohm,2012,1000mA,TP,520ohm/90	1	SNA
....4	T0568	3301-001569	BEAD-SMD;600ohm,2012,1000mA,TP,520ohm/90	1	SNA
....4	T0568	3301-001569	BEAD-SMD;600ohm,2012,1000mA,TP,520ohm/90	1	SNA
....4	T0568	3301-001569	BEAD-SMD;600ohm,2012,1000mA,TP,520ohm/90	1	SNA
....4	T0568	3301-001569	BEAD-SMD;600ohm,2012,1000mA,TP,520ohm/90	1	SNA
....4	T0568	3301-001569	BEAD-SMD;600ohm,2012,1000mA,TP,520ohm/90	1	SNA
....4	T0568	3301-001569	BEAD-SMD;600ohm,2012,1000mA,TP,520ohm/90	1	SNA
....4	MP1.1	BN41-00684A	PCB-DIGITAL B/D;BORDEAUX,FR-4,6L,1.0,1.6	1	SNA
....4	M0018	BN97-00805H	ASSY MICOM;T-XXXX-XXXX,LE32R73BDX/XEU29L	1	SA
.....5	IC115	1107-001475	IC-FLASH MEMORY;29LV320,32MBIT,4MX8/2MX1	1	SA
....4	IC104	0801-002172	IC-CMOS LOGIC;74LCX16244,BUFFER/LINE DRI	1	SA
....4	T0087	1203-003704	IC-POSI.FIXED REG.;G953-18T6U,SOT-223,3P	1	SA
..2	M0014	BN94-01001B	ASSY PCB MAIN-AMZ;LE32R74BDX/*	1	SA
...3	T0245	0202-001522	SOLDER-WIRE FLUX;LFA3-107,-,D1.2,96.5Sn/	0.25	SNA
...3	JA2007	3701-001294	CONNECTOR-DSUB;15P,3R,FEMALE,STRAIGHT,AU	1	SA
...3	CN902	3703-001600	CONNECTOR-BACK PANEL;32P,2R,FEMALE,ANGLE	1	SA
...3	CN902	3703-001600	CONNECTOR-BACK PANEL;32P,2R,FEMALE,ANGLE	1	SA
...3	CN4002	3711-004484	HEADER-BOARD TO CABLE;BOX,5P,1R,2mm,STRA	1	SA
...3	CN2002_32	3711-004909	HEADER-BOARD TO CABLE;BOX,14P,2R,2MM,ANG	1	SA
...3	CN4004	3711-005606	HEADER-BOARD TO CABLE;BOX,30P,2R,2mm,STR	1	SA
...3	CN1001	3711-005942	HEADER-BOARD TO CABLE;BOX,16P,1R,2mm,STR	1	SA
...3	JA2001	3722-000498	JACK-SCART;21P,-,SN,BLK,NO	1	SA
...3	JA2005	3722-000498	JACK-SCART;21P,-,SN,BLK,NO	1	SA
...3	JA2003	3722-001061	JACK-PHONE;1P,3.6PI,AG,BLK,N	1	SA
...3	JA2006	3722-001061	JACK-PHONE;1P,3.6PI,AG,BLK,N	1	SA
...3	JA2010	3722-002360	JACK-PIN;3P,AU,GRN/BLU/RED,STRAIGHT	1	SA
...3	JA2002	3722-002362	JACK-PIN;2P,Sn,WHT/RED,STRAIGHT	1	SA
...3	JA2004	3722-002362	JACK-PIN;2P,Sn,WHT/RED,STRAIGHT	1	SA
...3	JA2009	3722-002362	JACK-PIN;2P,Sn,WHT/RED,STRAIGHT	1	SA
...3	T0562	6046-001013	STAND OFF;M3,L5,Ni PLT,SUM24L,#4-40	2	SNA

ELECTRONIC SERVICE TIRGOVISTE

Level	Loc. No.	Code No.	Description & Specification	Q'ty	SA/SNA
...3	CIS3	BN40-00080A	TUNER;DNOS403ZH261B(S),DNOS403ZH261B(S),	1	SA
...3	T0852	BN96-01470A	ASSY BOARD P-OPTICAL;HP-P5581,OPTICAL	1	SA
....4	CN906	3707-001067	CONNECTOR-OPTICAL;PLUG,SM,-,4.4/2.0mm	1	SA
...3	T0174	BN97-01036B	ASSY SMD;LE32R74BDX/*	1	SNA
....4	CIS05	0202-001477	SOLDER-CREAM;LST309-M,-,D20~45§-,96.5Sn/	3.577	SNA
....4	D2003	0401-001056	DIODE-SWITCHING;MMBD4148SE,100V,200mA,SO	1	SA
....4	D2010	0401-001056	DIODE-SWITCHING;MMBD4148SE,100V,200mA,SO	1	SA
....4	D2011	0401-001056	DIODE-SWITCHING;MMBD4148SE,100V,200mA,SO	1	SA
....4	D2012	0401-001056	DIODE-SWITCHING;MMBD4148SE,100V,200mA,SO	1	SA
....4	D2013	0401-001056	DIODE-SWITCHING;MMBD4148SE,100V,200mA,SO	1	SA
....4	D2016	0401-001056	DIODE-SWITCHING;MMBD4148SE,100V,200mA,SO	1	SA
....4	D2017	0401-001056	DIODE-SWITCHING;MMBD4148SE,100V,200mA,SO	1	SA
....4	D2018	0401-001056	DIODE-SWITCHING;MMBD4148SE,100V,200mA,SO	1	SA
....4	D2019	0401-001056	DIODE-SWITCHING;MMBD4148SE,100V,200mA,SO	1	SA
....4	D2020	0401-001056	DIODE-SWITCHING;MMBD4148SE,100V,200mA,SO	1	SA
....4	D2021	0401-001056	DIODE-SWITCHING;MMBD4148SE,100V,200mA,SO	1	SA
....4	D2022	0401-001056	DIODE-SWITCHING;MMBD4148SE,100V,200mA,SO	1	SA
....4	D2023	0401-001056	DIODE-SWITCHING;MMBD4148SE,100V,200mA,SO	1	SA
....4	D2032	0401-001056	DIODE-SWITCHING;MMBD4148SE,100V,200mA,SO	1	SA
....4	D2033	0401-001056	DIODE-SWITCHING;MMBD4148SE,100V,200mA,SO	1	SA
....4	D2034	0401-001056	DIODE-SWITCHING;MMBD4148SE,100V,200mA,SO	1	SA
....4	D2044	0401-001056	DIODE-SWITCHING;MMBD4148SE,100V,200mA,SO	1	SA
....4	D2057	0401-001056	DIODE-SWITCHING;MMBD4148SE,100V,200mA,SO	1	SA
....4	D5001	0401-001056	DIODE-SWITCHING;MMBD4148SE,100V,200mA,SO	1	SA
....4	D5002	0401-001056	DIODE-SWITCHING;MMBD4148SE,100V,200mA,SO	1	SA
....4	D5003	0401-001056	DIODE-SWITCHING;MMBD4148SE,100V,200mA,SO	1	SA
....4	D5004	0401-001056	DIODE-SWITCHING;MMBD4148SE,100V,200mA,SO	1	SA
....4	D5005	0401-001056	DIODE-SWITCHING;MMBD4148SE,100V,200mA,SO	1	SA
....4	D5006	0401-001056	DIODE-SWITCHING;MMBD4148SE,100V,200mA,SO	1	SA
....4	D1001	0402-000553	DIODE-SCHOTTKY;"SS24,B240",40V,2000mA,DO	1	SA
....4	D1004	0402-000553	DIODE-SCHOTTKY;"SS24,B240",40V,2000mA,DO	1	SA
....4	D1008	0403-000258	DIODE-ZENER;BZX84C5V6,5.2-6V,225mW,SOT-2	1	SA
....4	D3003	0403-000258	DIODE-ZENER;BZX84C5V6,5.2-6V,225mW,SOT-2	1	SA
....4	D2001	0403-000620	DIODE-ZENER;RLZ5.6B,5.45-5.73V,500mW,LL-	1	SA
....4	D2002	0403-000620	DIODE-ZENER;RLZ5.6B,5.45-5.73V,500mW,LL-	1	SA
....4	D2040	0403-000620	DIODE-ZENER;RLZ5.6B,5.45-5.73V,500mW,LL-	1	SA
....4	D2041	0403-000620	DIODE-ZENER;RLZ5.6B,5.45-5.73V,500mW,LL-	1	SA
....4	D2042	0403-000620	DIODE-ZENER;RLZ5.6B,5.45-5.73V,500mW,LL-	1	SA
....4	D2043	0403-000620	DIODE-ZENER;RLZ5.6B,5.45-5.73V,500mW,LL-	1	SA
....4	D2064	0403-000620	DIODE-ZENER;RLZ5.6B,5.45-5.73V,500mW,LL-	1	SA
....4	D2065	0403-000620	DIODE-ZENER;RLZ5.6B,5.45-5.73V,500mW,LL-	1	SA
....4	D3006	0403-000620	DIODE-ZENER;RLZ5.6B,5.45-5.73V,500mW,LL-	1	SA
....4	D3008	0403-000620	DIODE-ZENER;RLZ5.6B,5.45-5.73V,500mW,LL-	1	SA
....4	D4001	0403-000620	DIODE-ZENER;RLZ5.6B,5.45-5.73V,500mW,LL-	1	SA
....4	D4002	0403-000620	DIODE-ZENER;RLZ5.6B,5.45-5.73V,500mW,LL-	1	SA
....4	D4003	0403-000620	DIODE-ZENER;RLZ5.6B,5.45-5.73V,500mW,LL-	1	SA
....4	D4005	0403-000620	DIODE-ZENER;RLZ5.6B,5.45-5.73V,500mW,LL-	1	SA
....4	D4006	0403-000620	DIODE-ZENER;RLZ5.6B,5.45-5.73V,500mW,LL-	1	SA
....4	D4007	0403-000620	DIODE-ZENER;RLZ5.6B,5.45-5.73V,500mW,LL-	1	SA
....4	D4008	0403-000620	DIODE-ZENER;RLZ5.6B,5.45-5.73V,500mW,LL-	1	SA
....4	D4009	0403-000620	DIODE-ZENER;RLZ5.6B,5.45-5.73V,500mW,LL-	1	SA
....4	D4010	0403-000620	DIODE-ZENER;RLZ5.6B,5.45-5.73V,500mW,LL-	1	SA
....4	D4011	0403-000620	DIODE-ZENER;RLZ5.6B,5.45-5.73V,500mW,LL-	1	SA
....4	D4012	0403-000620	DIODE-ZENER;RLZ5.6B,5.45-5.73V,500mW,LL-	1	SA
....4	D2004	0403-001016	DIODE-ZENER;RLZ6.2B,5.96-6.27V,500mW,LL-	1	SA
....4	D2009	0403-001169	DIODE-ZENER;RLZ16C,15.96-16.51V,500MW,LL	1	SA
....4	D2039	0403-001169	DIODE-ZENER;RLZ16C,15.96-16.51V,500MW,LL	1	SA
....4	D2005	0406-001172	DIODE-TVS;CDS3C30GTH,48V,0W,SMD	1	SA
....4	D2006	0406-001172	DIODE-TVS;CDS3C30GTH,48V,0W,SMD	1	SA
....4	D2007	0406-001172	DIODE-TVS;CDS3C30GTH,48V,0W,SMD	1	SA

ELECTRONIC SERVICE TIRGOVISTE

Level	Loc. No.	Code No.	Description & Specification	Q'ty	SA/SNA
....4	D2008	0406-001172	DIODE-TVS;CDS3C30GTH,48V,0W,SMD	1	SA
....4	D2014	0406-001172	DIODE-TVS;CDS3C30GTH,48V,0W,SMD	1	SA
....4	D2015	0406-001172	DIODE-TVS;CDS3C30GTH,48V,0W,SMD	1	SA
....4	D2024	0406-001172	DIODE-TVS;CDS3C30GTH,48V,0W,SMD	1	SA
....4	D2025	0406-001172	DIODE-TVS;CDS3C30GTH,48V,0W,SMD	1	SA
....4	D2026	0406-001172	DIODE-TVS;CDS3C30GTH,48V,0W,SMD	1	SA
....4	D2027	0406-001172	DIODE-TVS;CDS3C30GTH,48V,0W,SMD	1	SA
....4	D2028	0406-001172	DIODE-TVS;CDS3C30GTH,48V,0W,SMD	1	SA
....4	D2029	0406-001172	DIODE-TVS;CDS3C30GTH,48V,0W,SMD	1	SA
....4	D2030	0406-001172	DIODE-TVS;CDS3C30GTH,48V,0W,SMD	1	SA
....4	D2031	0406-001172	DIODE-TVS;CDS3C30GTH,48V,0W,SMD	1	SA
....4	D2035	0406-001172	DIODE-TVS;CDS3C30GTH,48V,0W,SMD	1	SA
....4	D2036	0406-001172	DIODE-TVS;CDS3C30GTH,48V,0W,SMD	1	SA
....4	D2037	0406-001172	DIODE-TVS;CDS3C30GTH,48V,0W,SMD	1	SA
....4	D2038	0406-001172	DIODE-TVS;CDS3C30GTH,48V,0W,SMD	1	SA
....4	D2051	0406-001172	DIODE-TVS;CDS3C30GTH,48V,0W,SMD	1	SA
....4	D2052	0406-001172	DIODE-TVS;CDS3C30GTH,48V,0W,SMD	1	SA
....4	D2054	0406-001172	DIODE-TVS;CDS3C30GTH,48V,0W,SMD	1	SA
....4	D2055	0406-001172	DIODE-TVS;CDS3C30GTH,48V,0W,SMD	1	SA
....4	D2056	0406-001172	DIODE-TVS;CDS3C30GTH,48V,0W,SMD	1	SA
....4	D1002	0407-000123	DIODE-ARRAY;DAN202K,80V,100mA,CA2-3,SOT-	1	SA
....4	D1009	0407-000123	DIODE-ARRAY;DAN202K,80V,100mA,CA2-3,SOT-	1	SA
....4	D3001	0407-000123	DIODE-ARRAY;DAN202K,80V,100mA,CA2-3,SOT-	1	SA
....4	D3002	0407-000123	DIODE-ARRAY;DAN202K,80V,100mA,CA2-3,SOT-	1	SA
....4	D3007_32	0407-000123	DIODE-ARRAY;DAN202K,80V,100mA,CA2-3,SOT-	1	SA
....4	Q1007	0501-000280	TR-SMALL SIGNAL;KSA1182,PNP,150MW,SOT-23	1	SA
....4	Q1001	0501-000342	TR-SMALL SIGNAL;KSC1623-Y,NPN,200mW,SOT-	1	SA
....4	Q1002	0501-000342	TR-SMALL SIGNAL;KSC1623-Y,NPN,200mW,SOT-	1	SA
....4	Q1005	0501-000342	TR-SMALL SIGNAL;KSC1623-Y,NPN,200mW,SOT-	1	SA
....4	Q1006	0501-000342	TR-SMALL SIGNAL;KSC1623-Y,NPN,200mW,SOT-	1	SA
....4	Q1008	0501-000342	TR-SMALL SIGNAL;KSC1623-Y,NPN,200mW,SOT-	1	SA
....4	Q1009	0501-000342	TR-SMALL SIGNAL;KSC1623-Y,NPN,200mW,SOT-	1	SA
....4	Q1010	0501-000342	TR-SMALL SIGNAL;KSC1623-Y,NPN,200mW,SOT-	1	SA
....4	Q1011	0501-000342	TR-SMALL SIGNAL;KSC1623-Y,NPN,200mW,SOT-	1	SA
....4	Q1013	0501-000342	TR-SMALL SIGNAL;KSC1623-Y,NPN,200mW,SOT-	1	SA
....4	Q1014	0501-000342	TR-SMALL SIGNAL;KSC1623-Y,NPN,200mW,SOT-	1	SA
....4	Q2001	0501-000342	TR-SMALL SIGNAL;KSC1623-Y,NPN,200mW,SOT-	1	SA
....4	Q3001	0501-000342	TR-SMALL SIGNAL;KSC1623-Y,NPN,200mW,SOT-	1	SA
....4	Q3003	0501-000342	TR-SMALL SIGNAL;KSC1623-Y,NPN,200mW,SOT-	1	SA
....4	Q3008	0501-000342	TR-SMALL SIGNAL;KSC1623-Y,NPN,200mW,SOT-	1	SA
....4	Q3010	0501-000342	TR-SMALL SIGNAL;KSC1623-Y,NPN,200mW,SOT-	1	SA
....4	Q3011	0501-000342	TR-SMALL SIGNAL;KSC1623-Y,NPN,200mW,SOT-	1	SA
....4	Q4001	0501-000342	TR-SMALL SIGNAL;KSC1623-Y,NPN,200mW,SOT-	1	SA
....4	Q5010	0501-000342	TR-SMALL SIGNAL;KSC1623-Y,NPN,200mW,SOT-	1	SA
....4	Q1003	0501-002080	TR-SMALL SIGNAL;2SC2412K,NPN,200mW,SC-59	1	SA
....4	Q1004	0501-002080	TR-SMALL SIGNAL;2SC2412K,NPN,200mW,SC-59	1	SA
....4	Q5011	0501-002080	TR-SMALL SIGNAL;2SC2412K,NPN,200mW,SC-59	1	SA
....4	Q409	0505-000110	FET-SILICON;2N7002,N,60V,115mA,7.5ohm,0.	1	SA
....4	Q409	0505-000110	FET-SILICON;2N7002,N,60V,115mA,7.5ohm,0.	1	SA
....4	Q409	0505-000110	FET-SILICON;2N7002,N,60V,115mA,7.5ohm,0.	1	SA
....4	Q409	0505-000110	FET-SILICON;2N7002,N,60V,115mA,7.5ohm,0.	1	SA
....4	Q409	0505-000110	FET-SILICON;2N7002,N,60V,115mA,7.5ohm,0.	1	SA
....4	Q409	0505-001170	FET-SILICON;SI9933ADY-T1,P,-20V,3.4A,0.0	1	SA
....4	IC104	0801-002095	IC-CMOS LOGIC;74LCX245,TRANSCEIVER,TSSOP	1	SA
....4	IC3002	0903-001432	IC-MICROCOMPUTER;M30840SGP,16Bit,LQFP,10	1	SA
....4	IC1003	1001-000164	IC-ANALOG MULTIPLEX;74HC4052,CMOS,SOP,16	1	SA
....4	IC1006	1001-000164	IC-ANALOG MULTIPLEX;74HC4052,CMOS,SOP,16	1	SA
....4	IC106	1001-001082	IC-VIDEO SWITCH;BA7657F,-,SOP,24P,300MIL	1	SA
....4	IC3006	1001-001109	IC-ANALOG SWITCH;FST3125M,BUS SWITCH & C	1	SA
....4	IC5005	1001-001109	IC-ANALOG SWITCH;FST3125M,BUS SWITCH & C	1	SA

ELECTRONIC SERVICE TIRGOVISTE

Level	Loc. No.	Code No.	Description & Specification	Q'ty	SA/SNA
....4	IC107	1002-001399	IC-D/A CONVERTER;PCM1754,24BIT,SSOP,16P,	1	SA
....4	IC110	1006-001076	IC-DRIVER/RECEIVER;MAX232ECWE+T,SOP,16P,	1	SA
....4	IC112	1103-000129	IC-EEPROM;24C02,2Kbit,256x8Bit,SOP,8P,5x	1	SA
....4	IC112	1103-000129	IC-EEPROM;24C02,2Kbit,256x8Bit,SOP,8P,5x	1	SA
....4	IC112	1103-001279	IC-EEPROM;24C32,32Kbit,4Kx8Bit,SOP,8P,5x	1	SA
....4	IC5002	1105-001538	IC-VIDEO RAM;K4D263238,-,128M,4x1Mx32Bit	1	SA
....4	DU410	1201-000166	IC-OP AMP;LM358,SOP,ST,8P,150MIL,DUAL,10	1	SA
....4	T0085	1201-002136	IC-AUDIO AMP;LM4810,MSOP,8P,3x3mm,DUAL,-	1	SA
....4	T0085	1201-002246	IC-AUDIO AMP;STA323W,SO,36P,15.9x11mm,-,	1	SA
....4	IC150	1203-001009	IC-SWITCH REG.;3172,SOP,8P,244MIL,PLASTI	1	SA
....4	IC3009	1203-001559	IC-RESET;DS1834A,SOIC,8P,150MIL,PLASTIC,	1	SA
....4	T0087	1203-001815	IC-POSI.FIXED REG.;78M09,TO-252,3P,-,PLA	1	SA
....4	T0087	1203-001816	IC-POSI.FIXED REG.;78M08,TO-252,3P,-,PLA	1	SA
....4	IC3008_32	1203-001824	IC-VOL. DETECTOR;7042,SOT-89,3P,-,PLASTI	1	SA
....4	T0087	1203-002842	IC-POSI.FIXED REG.;AP1117D-33A,TO-252,3P	1	SA
....4	T0087	1203-002842	IC-POSI.FIXED REG.;AP1117D-33A,TO-252,3P	1	SA
....4	T0087	1203-002842	IC-POSI.FIXED REG.;AP1117D-33A,TO-252,3P	1	SA
....4	T0087	1203-002855	IC-POSI.FIXED REG.;MC33269DTRK-5.0,DPRK,	1	SA
....4	T0087	1203-002974	IC-POSI.FIXED REG.;AP1117D-25A,TO-252,3P	1	SA
....4	T0170	1203-003059	IC-SWITCH VOL. REG.;MP1583,SOIC,8P,4.9x3	1	SA
....4	IC1009	1204-002464	IC-AUDIO PROCESSOR;STV8257DSX,TQFP,80P,1	1	SA
....4	IC118	1204-002503	IC-VIDEO PROCESS;SVP-PX56-7256,PQFP,256P	1	SNA
....4	R2024	2007-000040	R-CHIP;150ohm,1%,1/10W,TP,1608	1	SA
....4	R5026	2007-000043	R-CHIP;1Kohm,1%,1/10W,TP,1608	1	SA
....4	R5029	2007-000043	R-CHIP;1Kohm,1%,1/10W,TP,1608	1	SA
....4	R3088	2007-000052	R-CHIP;10Kohm,1%,1/10W,TP,1608	1	SA
....4	R3100	2007-000052	R-CHIP;10Kohm,1%,1/10W,TP,1608	1	SA
....4	R3101	2007-000052	R-CHIP;10Kohm,1%,1/10W,TP,1608	1	SA
....4	R3102	2007-000052	R-CHIP;10Kohm,1%,1/10W,TP,1608	1	SA
....4	R3103	2007-000052	R-CHIP;10Kohm,1%,1/10W,TP,1608	1	SA
....4	R3104	2007-000052	R-CHIP;10Kohm,1%,1/10W,TP,1608	1	SA
....4	R3105	2007-000052	R-CHIP;10Kohm,1%,1/10W,TP,1608	1	SA
....4	R3106	2007-000052	R-CHIP;10Kohm,1%,1/10W,TP,1608	1	SA
....4	R3107	2007-000052	R-CHIP;10Kohm,1%,1/10W,TP,1608	1	SA
....4	R3130	2007-000052	R-CHIP;10Kohm,1%,1/10W,TP,1608	1	SA
....4	R3141	2007-000052	R-CHIP;10Kohm,1%,1/10W,TP,1608	1	SA
....4	R5013	2007-000060	R-CHIP;100Kohm,1%,1/10W,TP,1608	1	SA
....4	R1066	2007-000067	R-CHIP;15Kohm,1%,1/10W,TP,1608	1	SA
....4	R1059	2007-000070	R-CHIP;0ohm,5%,1/10W,TP,1608	1	SA
....4	R1085	2007-000070	R-CHIP;0ohm,5%,1/10W,TP,1608	1	SA
....4	R1086	2007-000070	R-CHIP;0ohm,5%,1/10W,TP,1608	1	SA
....4	R1087	2007-000070	R-CHIP;0ohm,5%,1/10W,TP,1608	1	SA
....4	R2055	2007-000070	R-CHIP;0ohm,5%,1/10W,TP,1608	1	SA
....4	R2064	2007-000070	R-CHIP;0ohm,5%,1/10W,TP,1608	1	SA
....4	R2069_32	2007-000070	R-CHIP;0ohm,5%,1/10W,TP,1608	1	SA
....4	R2070_32	2007-000070	R-CHIP;0ohm,5%,1/10W,TP,1608	1	SA
....4	R2071_32	2007-000070	R-CHIP;0ohm,5%,1/10W,TP,1608	1	SA
....4	R2080	2007-000070	R-CHIP;0ohm,5%,1/10W,TP,1608	1	SA
....4	R2088_32	2007-000070	R-CHIP;0ohm,5%,1/10W,TP,1608	1	SA
....4	R2089_32	2007-000070	R-CHIP;0ohm,5%,1/10W,TP,1608	1	SA
....4	R2090_32	2007-000070	R-CHIP;0ohm,5%,1/10W,TP,1608	1	SA
....4	R2091_32	2007-000070	R-CHIP;0ohm,5%,1/10W,TP,1608	1	SA
....4	R3003	2007-000070	R-CHIP;0ohm,5%,1/10W,TP,1608	1	SA
....4	R3019	2007-000070	R-CHIP;0ohm,5%,1/10W,TP,1608	1	SA
....4	R3024	2007-000070	R-CHIP;0ohm,5%,1/10W,TP,1608	1	SA
....4	R3025_LVDS	2007-000070	R-CHIP;0ohm,5%,1/10W,TP,1608	1	SA
....4	R3026	2007-000070	R-CHIP;0ohm,5%,1/10W,TP,1608	1	SA
....4	R3027	2007-000070	R-CHIP;0ohm,5%,1/10W,TP,1608	1	SA
....4	R3028	2007-000070	R-CHIP;0ohm,5%,1/10W,TP,1608	1	SA
....4	R3029	2007-000070	R-CHIP;0ohm,5%,1/10W,TP,1608	1	SA

ELECTRONIC SERVICE TIRGOVISTE

Level	Loc. No.	Code No.	Description & Specification	Q'ty	SA/SNA
....4	R3031	2007-000070	R-CHIP;0ohm,5%,1/10W,TP,1608	1	SA
....4	R3032	2007-000070	R-CHIP;0ohm,5%,1/10W,TP,1608	1	SA
....4	R3033	2007-000070	R-CHIP;0ohm,5%,1/10W,TP,1608	1	SA
....4	R3035	2007-000070	R-CHIP;0ohm,5%,1/10W,TP,1608	1	SA
....4	R3037	2007-000070	R-CHIP;0ohm,5%,1/10W,TP,1608	1	SA
....4	R3039	2007-000070	R-CHIP;0ohm,5%,1/10W,TP,1608	1	SA
....4	R3040	2007-000070	R-CHIP;0ohm,5%,1/10W,TP,1608	1	SA
....4	R3041	2007-000070	R-CHIP;0ohm,5%,1/10W,TP,1608	1	SA
....4	R3043	2007-000070	R-CHIP;0ohm,5%,1/10W,TP,1608	1	SA
....4	R3047_LVDS	2007-000070	R-CHIP;0ohm,5%,1/10W,TP,1608	1	SA
....4	R3089	2007-000070	R-CHIP;0ohm,5%,1/10W,TP,1608	1	SA
....4	R3090	2007-000070	R-CHIP;0ohm,5%,1/10W,TP,1608	1	SA
....4	R3117	2007-000070	R-CHIP;0ohm,5%,1/10W,TP,1608	1	SA
....4	R3118	2007-000070	R-CHIP;0ohm,5%,1/10W,TP,1608	1	SA
....4	R3132	2007-000070	R-CHIP;0ohm,5%,1/10W,TP,1608	1	SA
....4	R4001	2007-000070	R-CHIP;0ohm,5%,1/10W,TP,1608	1	SA
....4	R4002	2007-000070	R-CHIP;0ohm,5%,1/10W,TP,1608	1	SA
....4	R4003	2007-000070	R-CHIP;0ohm,5%,1/10W,TP,1608	1	SA
....4	R4012	2007-000070	R-CHIP;0ohm,5%,1/10W,TP,1608	1	SA
....4	R4016	2007-000070	R-CHIP;0ohm,5%,1/10W,TP,1608	1	SA
....4	R4017	2007-000070	R-CHIP;0ohm,5%,1/10W,TP,1608	1	SA
....4	R4018	2007-000070	R-CHIP;0ohm,5%,1/10W,TP,1608	1	SA
....4	R4019	2007-000070	R-CHIP;0ohm,5%,1/10W,TP,1608	1	SA
....4	R4032	2007-000070	R-CHIP;0ohm,5%,1/10W,TP,1608	1	SA
....4	R4033	2007-000070	R-CHIP;0ohm,5%,1/10W,TP,1608	1	SA
....4	R4035	2007-000070	R-CHIP;0ohm,5%,1/10W,TP,1608	1	SA
....4	R4051_32	2007-000070	R-CHIP;0ohm,5%,1/10W,TP,1608	1	SA
....4	R4086_EN	2007-000070	R-CHIP;0ohm,5%,1/10W,TP,1608	1	SA
....4	R4090	2007-000070	R-CHIP;0ohm,5%,1/10W,TP,1608	1	SA
....4	R5012	2007-000070	R-CHIP;0ohm,5%,1/10W,TP,1608	1	SA
....4	R5014	2007-000070	R-CHIP;0ohm,5%,1/10W,TP,1608	1	SA
....4	R5068	2007-000070	R-CHIP;0ohm,5%,1/10W,TP,1608	1	SA
....4	R5076	2007-000070	R-CHIP;0ohm,5%,1/10W,TP,1608	1	SA
....4	R5084	2007-000070	R-CHIP;0ohm,5%,1/10W,TP,1608	1	SA
....4	R5087	2007-000070	R-CHIP;0ohm,5%,1/10W,TP,1608	1	SA
....4	R5099	2007-000070	R-CHIP;0ohm,5%,1/10W,TP,1608	1	SA
....4	R5100	2007-000070	R-CHIP;0ohm,5%,1/10W,TP,1608	1	SA
....4	R5101	2007-000070	R-CHIP;0ohm,5%,1/10W,TP,1608	1	SA
....4	R5103	2007-000070	R-CHIP;0ohm,5%,1/10W,TP,1608	1	SA
....4	R5115	2007-000070	R-CHIP;0ohm,5%,1/10W,TP,1608	1	SA
....4	R5116	2007-000070	R-CHIP;0ohm,5%,1/10W,TP,1608	1	SA
....4	R5117	2007-000070	R-CHIP;0ohm,5%,1/10W,TP,1608	1	SA
....4	R5120	2007-000070	R-CHIP;0ohm,5%,1/10W,TP,1608	1	SA
....4	R1084	2007-000071	R-CHIP;22ohm,5%,1/10W,TP,1608	1	SA
....4	R1095	2007-000071	R-CHIP;22ohm,5%,1/10W,TP,1608	1	SA
....4	R2050	2007-000071	R-CHIP;22ohm,5%,1/10W,TP,1608	1	SA
....4	R2063	2007-000071	R-CHIP;22ohm,5%,1/10W,TP,1608	1	SA
....4	R2106	2007-000071	R-CHIP;22ohm,5%,1/10W,TP,1608	1	SA
....4	R2107	2007-000071	R-CHIP;22ohm,5%,1/10W,TP,1608	1	SA
....4	R2108	2007-000071	R-CHIP;22ohm,5%,1/10W,TP,1608	1	SA
....4	R2109	2007-000071	R-CHIP;22ohm,5%,1/10W,TP,1608	1	SA
....4	R2110	2007-000071	R-CHIP;22ohm,5%,1/10W,TP,1608	1	SA
....4	R2111	2007-000071	R-CHIP;22ohm,5%,1/10W,TP,1608	1	SA
....4	R2112	2007-000071	R-CHIP;22ohm,5%,1/10W,TP,1608	1	SA
....4	R2113	2007-000071	R-CHIP;22ohm,5%,1/10W,TP,1608	1	SA
....4	R4015	2007-000071	R-CHIP;22ohm,5%,1/10W,TP,1608	1	SA
....4	R4020	2007-000071	R-CHIP;22ohm,5%,1/10W,TP,1608	1	SA
....4	R4093	2007-000071	R-CHIP;22ohm,5%,1/10W,TP,1608	1	SA
....4	R5030	2007-000071	R-CHIP;22ohm,5%,1/10W,TP,1608	1	SA
....4	R5031	2007-000071	R-CHIP;22ohm,5%,1/10W,TP,1608	1	SA

ELECTRONIC SERVICE TIRGOVISTE

Level	Loc. No.	Code No.	Description & Specification	Q'ty	SA/SNA
....4	R5032	2007-000071	R-CHIP;22ohm,5%,1/10W,TP,1608	1	SA
....4	R5033	2007-000071	R-CHIP;22ohm,5%,1/10W,TP,1608	1	SA
....4	R5061	2007-000071	R-CHIP;22ohm,5%,1/10W,TP,1608	1	SA
....4	R5065	2007-000071	R-CHIP;22ohm,5%,1/10W,TP,1608	1	SA
....4	R5071	2007-000071	R-CHIP;22ohm,5%,1/10W,TP,1608	1	SA
....4	R5077	2007-000071	R-CHIP;22ohm,5%,1/10W,TP,1608	1	SA
....4	R5081	2007-000071	R-CHIP;22ohm,5%,1/10W,TP,1608	1	SA
....4	R5085	2007-000071	R-CHIP;22ohm,5%,1/10W,TP,1608	1	SA
....4	R5088	2007-000071	R-CHIP;22ohm,5%,1/10W,TP,1608	1	SA
....4	R5090	2007-000071	R-CHIP;22ohm,5%,1/10W,TP,1608	1	SA
....4	R5094	2007-000071	R-CHIP;22ohm,5%,1/10W,TP,1608	1	SA
....4	R5098	2007-000071	R-CHIP;22ohm,5%,1/10W,TP,1608	1	SA
....4	R5102	2007-000071	R-CHIP;22ohm,5%,1/10W,TP,1608	1	SA
....4	R5104	2007-000071	R-CHIP;22ohm,5%,1/10W,TP,1608	1	SA
....4	R5106	2007-000071	R-CHIP;22ohm,5%,1/10W,TP,1608	1	SA
....4	R5108	2007-000071	R-CHIP;22ohm,5%,1/10W,TP,1608	1	SA
....4	R1061	2007-000072	R-CHIP;47ohm,5%,1/10W,TP,1608	1	SA
....4	R1063	2007-000072	R-CHIP;47ohm,5%,1/10W,TP,1608	1	SA
....4	R2007	2007-000072	R-CHIP;47ohm,5%,1/10W,TP,1608	1	SA
....4	R2008	2007-000072	R-CHIP;47ohm,5%,1/10W,TP,1608	1	SA
....4	R2049	2007-000072	R-CHIP;47ohm,5%,1/10W,TP,1608	1	SA
....4	R2051	2007-000072	R-CHIP;47ohm,5%,1/10W,TP,1608	1	SA
....4	R4104	2007-000072	R-CHIP;47ohm,5%,1/10W,TP,1608	1	SA
....4	R4105	2007-000072	R-CHIP;47ohm,5%,1/10W,TP,1608	1	SA
....4	R4106	2007-000072	R-CHIP;47ohm,5%,1/10W,TP,1608	1	SA
....4	R4107	2007-000072	R-CHIP;47ohm,5%,1/10W,TP,1608	1	SA
....4	R4108	2007-000072	R-CHIP;47ohm,5%,1/10W,TP,1608	1	SA
....4	R4109	2007-000072	R-CHIP;47ohm,5%,1/10W,TP,1608	1	SA
....4	R4110	2007-000072	R-CHIP;47ohm,5%,1/10W,TP,1608	1	SA
....4	R4111	2007-000072	R-CHIP;47ohm,5%,1/10W,TP,1608	1	SA
....4	R4112	2007-000072	R-CHIP;47ohm,5%,1/10W,TP,1608	1	SA
....4	R4113	2007-000072	R-CHIP;47ohm,5%,1/10W,TP,1608	1	SA
....4	R5019	2007-000072	R-CHIP;47ohm,5%,1/10W,TP,1608	1	SA
....4	R5020	2007-000072	R-CHIP;47ohm,5%,1/10W,TP,1608	1	SA
....4	R5048	2007-000072	R-CHIP;47ohm,5%,1/10W,TP,1608	1	SA
....4	R5050	2007-000072	R-CHIP;47ohm,5%,1/10W,TP,1608	1	SA
....4	R1009	2007-000074	R-CHIP;100ohm,5%,1/10W,TP,1608	1	SA
....4	R1010	2007-000074	R-CHIP;100ohm,5%,1/10W,TP,1608	1	SA
....4	R1011	2007-000074	R-CHIP;100ohm,5%,1/10W,TP,1608	1	SA
....4	R1012	2007-000074	R-CHIP;100ohm,5%,1/10W,TP,1608	1	SA
....4	R1013	2007-000074	R-CHIP;100ohm,5%,1/10W,TP,1608	1	SA
....4	R1014	2007-000074	R-CHIP;100ohm,5%,1/10W,TP,1608	1	SA
....4	R1017	2007-000074	R-CHIP;100ohm,5%,1/10W,TP,1608	1	SA
....4	R1018	2007-000074	R-CHIP;100ohm,5%,1/10W,TP,1608	1	SA
....4	R1032	2007-000074	R-CHIP;100ohm,5%,1/10W,TP,1608	1	SA
....4	R1033	2007-000074	R-CHIP;100ohm,5%,1/10W,TP,1608	1	SA
....4	R1037	2007-000074	R-CHIP;100ohm,5%,1/10W,TP,1608	1	SA
....4	R1040	2007-000074	R-CHIP;100ohm,5%,1/10W,TP,1608	1	SA
....4	R1042	2007-000074	R-CHIP;100ohm,5%,1/10W,TP,1608	1	SA
....4	R1047	2007-000074	R-CHIP;100ohm,5%,1/10W,TP,1608	1	SA
....4	R1048	2007-000074	R-CHIP;100ohm,5%,1/10W,TP,1608	1	SA
....4	R1049	2007-000074	R-CHIP;100ohm,5%,1/10W,TP,1608	1	SA
....4	R1050	2007-000074	R-CHIP;100ohm,5%,1/10W,TP,1608	1	SA
....4	R1052	2007-000074	R-CHIP;100ohm,5%,1/10W,TP,1608	1	SA
....4	R1053	2007-000074	R-CHIP;100ohm,5%,1/10W,TP,1608	1	SA
....4	R1054	2007-000074	R-CHIP;100ohm,5%,1/10W,TP,1608	1	SA
....4	R1055	2007-000074	R-CHIP;100ohm,5%,1/10W,TP,1608	1	SA
....4	R1056	2007-000074	R-CHIP;100ohm,5%,1/10W,TP,1608	1	SA
....4	R1091	2007-000074	R-CHIP;100ohm,5%,1/10W,TP,1608	1	SA
....4	R1092	2007-000074	R-CHIP;100ohm,5%,1/10W,TP,1608	1	SA

ELECTRONIC SERVICE TIRGOVISTE

Level	Loc. No.	Code No.	Description & Specification	Q'ty	SA/SNA
....4	R1093	2007-000074	R-CHIP;100ohm,5%,1/10W,TP,1608	1	SA
....4	R2018	2007-000074	R-CHIP;100ohm,5%,1/10W,TP,1608	1	SA
....4	R2022	2007-000074	R-CHIP;100ohm,5%,1/10W,TP,1608	1	SA
....4	R2023	2007-000074	R-CHIP;100ohm,5%,1/10W,TP,1608	1	SA
....4	R2029	2007-000074	R-CHIP;100ohm,5%,1/10W,TP,1608	1	SA
....4	R2031	2007-000074	R-CHIP;100ohm,5%,1/10W,TP,1608	1	SA
....4	R2053	2007-000074	R-CHIP;100ohm,5%,1/10W,TP,1608	1	SA
....4	R2058	2007-000074	R-CHIP;100ohm,5%,1/10W,TP,1608	1	SA
....4	R2060	2007-000074	R-CHIP;100ohm,5%,1/10W,TP,1608	1	SA
....4	R2068	2007-000074	R-CHIP;100ohm,5%,1/10W,TP,1608	1	SA
....4	R2081	2007-000074	R-CHIP;100ohm,5%,1/10W,TP,1608	1	SA
....4	R2084	2007-000074	R-CHIP;100ohm,5%,1/10W,TP,1608	1	SA
....4	R2093	2007-000074	R-CHIP;100ohm,5%,1/10W,TP,1608	1	SA
....4	R3008	2007-000074	R-CHIP;100ohm,5%,1/10W,TP,1608	1	SA
....4	R3009	2007-000074	R-CHIP;100ohm,5%,1/10W,TP,1608	1	SA
....4	R3010	2007-000074	R-CHIP;100ohm,5%,1/10W,TP,1608	1	SA
....4	R3011	2007-000074	R-CHIP;100ohm,5%,1/10W,TP,1608	1	SA
....4	R3034	2007-000074	R-CHIP;100ohm,5%,1/10W,TP,1608	1	SA
....4	R3046	2007-000074	R-CHIP;100ohm,5%,1/10W,TP,1608	1	SA
....4	R3057	2007-000074	R-CHIP;100ohm,5%,1/10W,TP,1608	1	SA
....4	R3058	2007-000074	R-CHIP;100ohm,5%,1/10W,TP,1608	1	SA
....4	R3059	2007-000074	R-CHIP;100ohm,5%,1/10W,TP,1608	1	SA
....4	R3062	2007-000074	R-CHIP;100ohm,5%,1/10W,TP,1608	1	SA
....4	R3063	2007-000074	R-CHIP;100ohm,5%,1/10W,TP,1608	1	SA
....4	R3073	2007-000074	R-CHIP;100ohm,5%,1/10W,TP,1608	1	SA
....4	R3074	2007-000074	R-CHIP;100ohm,5%,1/10W,TP,1608	1	SA
....4	R3077	2007-000074	R-CHIP;100ohm,5%,1/10W,TP,1608	1	SA
....4	R3078	2007-000074	R-CHIP;100ohm,5%,1/10W,TP,1608	1	SA
....4	R3125	2007-000074	R-CHIP;100ohm,5%,1/10W,TP,1608	1	SA
....4	R3127	2007-000074	R-CHIP;100ohm,5%,1/10W,TP,1608	1	SA
....4	R3135	2007-000074	R-CHIP;100ohm,5%,1/10W,TP,1608	1	SA
....4	R4028	2007-000074	R-CHIP;100ohm,5%,1/10W,TP,1608	1	SA
....4	R4038	2007-000074	R-CHIP;100ohm,5%,1/10W,TP,1608	1	SA
....4	R4049	2007-000074	R-CHIP;100ohm,5%,1/10W,TP,1608	1	SA
....4	R4050	2007-000074	R-CHIP;100ohm,5%,1/10W,TP,1608	1	SA
....4	R4097	2007-000074	R-CHIP;100ohm,5%,1/10W,TP,1608	1	SA
....4	R4102	2007-000074	R-CHIP;100ohm,5%,1/10W,TP,1608	1	SA
....4	R4120	2007-000074	R-CHIP;100ohm,5%,1/10W,TP,1608	1	SA
....4	R5010	2007-000074	R-CHIP;100ohm,5%,1/10W,TP,1608	1	SA
....4	R5066	2007-000074	R-CHIP;100ohm,5%,1/10W,TP,1608	1	SA
....4	R5069	2007-000074	R-CHIP;100ohm,5%,1/10W,TP,1608	1	SA
....4	R4121	2007-000075	R-CHIP;220ohm,5%,1/10W,TP,1608	1	SA
....4	R2001	2007-000076	R-CHIP;330ohm,5%,1/10W,TP,1608	1	SA
....4	R2005	2007-000076	R-CHIP;330ohm,5%,1/10W,TP,1608	1	SA
....4	R2035	2007-000076	R-CHIP;330ohm,5%,1/10W,TP,1608	1	SA
....4	R2040	2007-000076	R-CHIP;330ohm,5%,1/10W,TP,1608	1	SA
....4	R1098	2007-000077	R-CHIP;470ohm,5%,1/10W,TP,1608	1	SA
....4	R2004	2007-000077	R-CHIP;470ohm,5%,1/10W,TP,1608	1	SA
....4	R2006	2007-000077	R-CHIP;470ohm,5%,1/10W,TP,1608	1	SA
....4	R2033	2007-000077	R-CHIP;470ohm,5%,1/10W,TP,1608	1	SA
....4	R2034	2007-000077	R-CHIP;470ohm,5%,1/10W,TP,1608	1	SA
....4	R2037	2007-000077	R-CHIP;470ohm,5%,1/10W,TP,1608	1	SA
....4	R2039	2007-000077	R-CHIP;470ohm,5%,1/10W,TP,1608	1	SA
....4	R2042	2007-000077	R-CHIP;470ohm,5%,1/10W,TP,1608	1	SA
....4	R2043	2007-000077	R-CHIP;470ohm,5%,1/10W,TP,1608	1	SA
....4	R2074	2007-000077	R-CHIP;470ohm,5%,1/10W,TP,1608	1	SA
....4	R2075	2007-000077	R-CHIP;470ohm,5%,1/10W,TP,1608	1	SA
....4	R2077	2007-000077	R-CHIP;470ohm,5%,1/10W,TP,1608	1	SA
....4	R2079	2007-000077	R-CHIP;470ohm,5%,1/10W,TP,1608	1	SA
....4	R3128	2007-000077	R-CHIP;470ohm,5%,1/10W,TP,1608	1	SA

ELECTRONIC SERVICE TIRGOVISTE

Level	Loc. No.	Code No.	Description & Specification	Q'ty	SA/SNA
....4	R3133	2007-000077	R-CHIP;470ohm,5%,1/10W,TP,1608	1	SA
....4	R4030	2007-000077	R-CHIP;470ohm,5%,1/10W,TP,1608	1	SA
....4	R4031	2007-000077	R-CHIP;470ohm,5%,1/10W,TP,1608	1	SA
....4	R4099	2007-000077	R-CHIP;470ohm,5%,1/10W,TP,1608	1	SA
....4	R5091	2007-000077	R-CHIP;470ohm,5%,1/10W,TP,1608	1	SA
....4	R5093	2007-000077	R-CHIP;470ohm,5%,1/10W,TP,1608	1	SA
....4	R1074	2007-000078	R-CHIP;1Kohm,5%,1/10W,TP,1608	1	SA
....4	R2009	2007-000078	R-CHIP;1Kohm,5%,1/10W,TP,1608	1	SA
....4	R2016	2007-000078	R-CHIP;1Kohm,5%,1/10W,TP,1608	1	SA
....4	R3001	2007-000078	R-CHIP;1Kohm,5%,1/10W,TP,1608	1	SA
....4	R3030	2007-000078	R-CHIP;1Kohm,5%,1/10W,TP,1608	1	SA
....4	R3121	2007-000078	R-CHIP;1Kohm,5%,1/10W,TP,1608	1	SA
....4	R3138	2007-000078	R-CHIP;1Kohm,5%,1/10W,TP,1608	1	SA
....4	R3139	2007-000078	R-CHIP;1Kohm,5%,1/10W,TP,1608	1	SA
....4	R4025	2007-000078	R-CHIP;1Kohm,5%,1/10W,TP,1608	1	SA
....4	R4026	2007-000078	R-CHIP;1Kohm,5%,1/10W,TP,1608	1	SA
....4	R4027	2007-000078	R-CHIP;1Kohm,5%,1/10W,TP,1608	1	SA
....4	R4034	2007-000078	R-CHIP;1Kohm,5%,1/10W,TP,1608	1	SA
....4	R4053	2007-000078	R-CHIP;1Kohm,5%,1/10W,TP,1608	1	SA
....4	R4096	2007-000078	R-CHIP;1Kohm,5%,1/10W,TP,1608	1	SA
....4	R4103	2007-000078	R-CHIP;1Kohm,5%,1/10W,TP,1608	1	SA
....4	R5043	2007-000078	R-CHIP;1Kohm,5%,1/10W,TP,1608	1	SA
....4	R3016	2007-000082	R-CHIP;3.3Kohm,5%,1/10W,TP,1608	1	SA
....4	R3017	2007-000082	R-CHIP;3.3Kohm,5%,1/10W,TP,1608	1	SA
....4	R3071	2007-000082	R-CHIP;3.3Kohm,5%,1/10W,TP,1608	1	SA
....4	R3072	2007-000082	R-CHIP;3.3Kohm,5%,1/10W,TP,1608	1	SA
....4	R4100	2007-000082	R-CHIP;3.3Kohm,5%,1/10W,TP,1608	1	SA
....4	R4101	2007-000082	R-CHIP;3.3Kohm,5%,1/10W,TP,1608	1	SA
....4	R1031	2007-000084	R-CHIP;4.7Kohm,5%,1/10W,TP,1608	1	SA
....4	R1035	2007-000084	R-CHIP;4.7Kohm,5%,1/10W,TP,1608	1	SA
....4	R1058	2007-000084	R-CHIP;4.7Kohm,5%,1/10W,TP,1608	1	SA
....4	R1060	2007-000084	R-CHIP;4.7Kohm,5%,1/10W,TP,1608	1	SA
....4	R1082	2007-000084	R-CHIP;4.7Kohm,5%,1/10W,TP,1608	1	SA
....4	R3002	2007-000084	R-CHIP;4.7Kohm,5%,1/10W,TP,1608	1	SA
....4	R3014	2007-000084	R-CHIP;4.7Kohm,5%,1/10W,TP,1608	1	SA
....4	R3015	2007-000084	R-CHIP;4.7Kohm,5%,1/10W,TP,1608	1	SA
....4	R3018	2007-000084	R-CHIP;4.7Kohm,5%,1/10W,TP,1608	1	SA
....4	R3020	2007-000084	R-CHIP;4.7Kohm,5%,1/10W,TP,1608	1	SA
....4	R3021	2007-000084	R-CHIP;4.7Kohm,5%,1/10W,TP,1608	1	SA
....4	R3022	2007-000084	R-CHIP;4.7Kohm,5%,1/10W,TP,1608	1	SA
....4	R3036	2007-000084	R-CHIP;4.7Kohm,5%,1/10W,TP,1608	1	SA
....4	R3038	2007-000084	R-CHIP;4.7Kohm,5%,1/10W,TP,1608	1	SA
....4	R3070	2007-000084	R-CHIP;4.7Kohm,5%,1/10W,TP,1608	1	SA
....4	R3079	2007-000084	R-CHIP;4.7Kohm,5%,1/10W,TP,1608	1	SA
....4	R3080	2007-000084	R-CHIP;4.7Kohm,5%,1/10W,TP,1608	1	SA
....4	R3081	2007-000084	R-CHIP;4.7Kohm,5%,1/10W,TP,1608	1	SA
....4	R3082	2007-000084	R-CHIP;4.7Kohm,5%,1/10W,TP,1608	1	SA
....4	R3086	2007-000084	R-CHIP;4.7Kohm,5%,1/10W,TP,1608	1	SA
....4	R3087	2007-000084	R-CHIP;4.7Kohm,5%,1/10W,TP,1608	1	SA
....4	R3108	2007-000084	R-CHIP;4.7Kohm,5%,1/10W,TP,1608	1	SA
....4	R3109	2007-000084	R-CHIP;4.7Kohm,5%,1/10W,TP,1608	1	SA
....4	R3110	2007-000084	R-CHIP;4.7Kohm,5%,1/10W,TP,1608	1	SA
....4	R3111	2007-000084	R-CHIP;4.7Kohm,5%,1/10W,TP,1608	1	SA
....4	R3112	2007-000084	R-CHIP;4.7Kohm,5%,1/10W,TP,1608	1	SA
....4	R3113	2007-000084	R-CHIP;4.7Kohm,5%,1/10W,TP,1608	1	SA
....4	R3114	2007-000084	R-CHIP;4.7Kohm,5%,1/10W,TP,1608	1	SA
....4	R3116	2007-000084	R-CHIP;4.7Kohm,5%,1/10W,TP,1608	1	SA
....4	R3129	2007-000084	R-CHIP;4.7Kohm,5%,1/10W,TP,1608	1	SA
....4	R3134	2007-000084	R-CHIP;4.7Kohm,5%,1/10W,TP,1608	1	SA
....4	R3137	2007-000084	R-CHIP;4.7Kohm,5%,1/10W,TP,1608	1	SA

ELECTRONIC SERVICE TIRGOVISTE

Level	Loc. No.	Code No.	Description & Specification	Q'ty	SA/SNA
....4	R4036	2007-000084	R-CHIP;4.7Kohm,5%,1/10W,TP,1608	1	SA
....4	R4037	2007-000084	R-CHIP;4.7Kohm,5%,1/10W,TP,1608	1	SA
....4	R4098	2007-000084	R-CHIP;4.7Kohm,5%,1/10W,TP,1608	1	SA
....4	R4123	2007-000084	R-CHIP;4.7Kohm,5%,1/10W,TP,1608	1	SA
....4	R5064	2007-000084	R-CHIP;4.7Kohm,5%,1/10W,TP,1608	1	SA
....4	R5119	2007-000084	R-CHIP;4.7Kohm,5%,1/10W,TP,1608	1	SA
....4	R2028	2007-000087	R-CHIP;6.8Kohm,5%,1/10W,TP,1608	1	SA
....4	R2061	2007-000087	R-CHIP;6.8Kohm,5%,1/10W,TP,1608	1	SA
....4	R1015	2007-000090	R-CHIP;10Kohm,5%,1/10W,TP,1608	1	SA
....4	R1016	2007-000090	R-CHIP;10Kohm,5%,1/10W,TP,1608	1	SA
....4	R1038	2007-000090	R-CHIP;10Kohm,5%,1/10W,TP,1608	1	SA
....4	R1039	2007-000090	R-CHIP;10Kohm,5%,1/10W,TP,1608	1	SA
....4	R1041	2007-000090	R-CHIP;10Kohm,5%,1/10W,TP,1608	1	SA
....4	R1051	2007-000090	R-CHIP;10Kohm,5%,1/10W,TP,1608	1	SA
....4	R1067	2007-000090	R-CHIP;10Kohm,5%,1/10W,TP,1608	1	SA
....4	R1080	2007-000090	R-CHIP;10Kohm,5%,1/10W,TP,1608	1	SA
....4	R1101	2007-000090	R-CHIP;10Kohm,5%,1/10W,TP,1608	1	SA
....4	R1102	2007-000090	R-CHIP;10Kohm,5%,1/10W,TP,1608	1	SA
....4	R1103	2007-000090	R-CHIP;10Kohm,5%,1/10W,TP,1608	1	SA
....4	R1104	2007-000090	R-CHIP;10Kohm,5%,1/10W,TP,1608	1	SA
....4	R1105	2007-000090	R-CHIP;10Kohm,5%,1/10W,TP,1608	1	SA
....4	R2002	2007-000090	R-CHIP;10Kohm,5%,1/10W,TP,1608	1	SA
....4	R2003	2007-000090	R-CHIP;10Kohm,5%,1/10W,TP,1608	1	SA
....4	R2013	2007-000090	R-CHIP;10Kohm,5%,1/10W,TP,1608	1	SA
....4	R2044	2007-000090	R-CHIP;10Kohm,5%,1/10W,TP,1608	1	SA
....4	R2045	2007-000090	R-CHIP;10Kohm,5%,1/10W,TP,1608	1	SA
....4	R2057	2007-000090	R-CHIP;10Kohm,5%,1/10W,TP,1608	1	SA
....4	R2065	2007-000090	R-CHIP;10Kohm,5%,1/10W,TP,1608	1	SA
....4	R3005	2007-000090	R-CHIP;10Kohm,5%,1/10W,TP,1608	1	SA
....4	R3006	2007-000090	R-CHIP;10Kohm,5%,1/10W,TP,1608	1	SA
....4	R3007	2007-000090	R-CHIP;10Kohm,5%,1/10W,TP,1608	1	SA
....4	R3075	2007-000090	R-CHIP;10Kohm,5%,1/10W,TP,1608	1	SA
....4	R3076	2007-000090	R-CHIP;10Kohm,5%,1/10W,TP,1608	1	SA
....4	R3083	2007-000090	R-CHIP;10Kohm,5%,1/10W,TP,1608	1	SA
....4	R3084	2007-000090	R-CHIP;10Kohm,5%,1/10W,TP,1608	1	SA
....4	R3085	2007-000090	R-CHIP;10Kohm,5%,1/10W,TP,1608	1	SA
....4	R3131	2007-000090	R-CHIP;10Kohm,5%,1/10W,TP,1608	1	SA
....4	R3140	2007-000090	R-CHIP;10Kohm,5%,1/10W,TP,1608	1	SA
....4	R4118	2007-000090	R-CHIP;10Kohm,5%,1/10W,TP,1608	1	SA
....4	R4119	2007-000090	R-CHIP;10Kohm,5%,1/10W,TP,1608	1	SA
....4	R5004	2007-000090	R-CHIP;10Kohm,5%,1/10W,TP,1608	1	SA
....4	R5044	2007-000090	R-CHIP;10Kohm,5%,1/10W,TP,1608	1	SA
....4	R1070	2007-000093	R-CHIP;20Kohm,5%,1/10W,TP,1608	1	SA
....4	R1071	2007-000093	R-CHIP;20Kohm,5%,1/10W,TP,1608	1	SA
....4	R3004	2007-000094	R-CHIP;22Kohm,5%,1/10W,TP,1608	1	SA
....4	R1062	2007-000097	R-CHIP;47Kohm,5%,1/10W,TP,1608	1	SA
....4	R1068	2007-000097	R-CHIP;47Kohm,5%,1/10W,TP,1608	1	SA
....4	R1075	2007-000097	R-CHIP;47Kohm,5%,1/10W,TP,1608	1	SA
....4	R1079	2007-000097	R-CHIP;47Kohm,5%,1/10W,TP,1608	1	SA
....4	R2010	2007-000097	R-CHIP;47Kohm,5%,1/10W,TP,1608	1	SA
....4	R2011	2007-000097	R-CHIP;47Kohm,5%,1/10W,TP,1608	1	SA
....4	R2012	2007-000097	R-CHIP;47Kohm,5%,1/10W,TP,1608	1	SA
....4	R3099	2007-000097	R-CHIP;47Kohm,5%,1/10W,TP,1608	1	SA
....4	R1001	2007-000100	R-CHIP;68Kohm,5%,1/10W,TP,1608	1	SA
....4	R1002	2007-000100	R-CHIP;68Kohm,5%,1/10W,TP,1608	1	SA
....4	R1003	2007-000100	R-CHIP;68Kohm,5%,1/10W,TP,1608	1	SA
....4	R1004	2007-000100	R-CHIP;68Kohm,5%,1/10W,TP,1608	1	SA
....4	R1005	2007-000100	R-CHIP;68Kohm,5%,1/10W,TP,1608	1	SA
....4	R1006	2007-000100	R-CHIP;68Kohm,5%,1/10W,TP,1608	1	SA
....4	R1007	2007-000100	R-CHIP;68Kohm,5%,1/10W,TP,1608	1	SA

ELECTRONIC SERVICE TIRGOVISTE

Level	Loc. No.	Code No.	Description & Specification	Q'ty	SA/SNA
....4	R1008	2007-000100	R-CHIP;68Kohm,5%,1/10W,TP,1608	1	SA
....4	R1019	2007-000100	R-CHIP;68Kohm,5%,1/10W,TP,1608	1	SA
....4	R1020	2007-000100	R-CHIP;68Kohm,5%,1/10W,TP,1608	1	SA
....4	R1021	2007-000100	R-CHIP;68Kohm,5%,1/10W,TP,1608	1	SA
....4	R1022	2007-000100	R-CHIP;68Kohm,5%,1/10W,TP,1608	1	SA
....4	R1023	2007-000100	R-CHIP;68Kohm,5%,1/10W,TP,1608	1	SA
....4	R1024	2007-000100	R-CHIP;68Kohm,5%,1/10W,TP,1608	1	SA
....4	R1025	2007-000100	R-CHIP;68Kohm,5%,1/10W,TP,1608	1	SA
....4	R1026	2007-000100	R-CHIP;68Kohm,5%,1/10W,TP,1608	1	SA
....4	R1027	2007-000100	R-CHIP;68Kohm,5%,1/10W,TP,1608	1	SA
....4	R1028	2007-000100	R-CHIP;68Kohm,5%,1/10W,TP,1608	1	SA
....4	R1029	2007-000100	R-CHIP;68Kohm,5%,1/10W,TP,1608	1	SA
....4	R1030	2007-000100	R-CHIP;68Kohm,5%,1/10W,TP,1608	1	SA
....4	R1043	2007-000100	R-CHIP;68Kohm,5%,1/10W,TP,1608	1	SA
....4	R1044	2007-000100	R-CHIP;68Kohm,5%,1/10W,TP,1608	1	SA
....4	R1045	2007-000100	R-CHIP;68Kohm,5%,1/10W,TP,1608	1	SA
....4	R1046	2007-000100	R-CHIP;68Kohm,5%,1/10W,TP,1608	1	SA
....4	R1034	2007-000102	R-CHIP;100Kohm,5%,1/10W,TP,1608	1	SA
....4	R1064	2007-000102	R-CHIP;100Kohm,5%,1/10W,TP,1608	1	SA
....4	R1065	2007-000102	R-CHIP;100Kohm,5%,1/10W,TP,1608	1	SA
....4	R1069	2007-000102	R-CHIP;100Kohm,5%,1/10W,TP,1608	1	SA
....4	R1072	2007-000102	R-CHIP;100Kohm,5%,1/10W,TP,1608	1	SA
....4	R1073	2007-000107	R-CHIP;470Kohm,5%,1/10W,TP,1608	1	SA
....4	R4021	2007-000113	R-CHIP;33ohm,5%,1/10W,TP,1608	1	SA
....4	R4022	2007-000113	R-CHIP;33ohm,5%,1/10W,TP,1608	1	SA
....4	R4023	2007-000113	R-CHIP;33ohm,5%,1/10W,TP,1608	1	SA
....4	R4024	2007-000113	R-CHIP;33ohm,5%,1/10W,TP,1608	1	SA
....4	R1036	2007-000119	R-CHIP;560ohm,5%,1/10W,TP,1608	1	SA
....4	R1078	2007-000122	R-CHIP;1.2Kohm,5%,1/10W,TP,1608	1	SA
....4	R5053	2007-000123	R-CHIP;1.5Kohm,5%,1/10W,TP,1608	1	SA
....4	R5054	2007-000123	R-CHIP;1.5Kohm,5%,1/10W,TP,1608	1	SA
....4	R5055	2007-000123	R-CHIP;1.5Kohm,5%,1/10W,TP,1608	1	SA
....4	R1096	2007-000125	R-CHIP;3.9Kohm,5%,1/10W,TP,1608	1	SA
....4	R1076	2007-000129	R-CHIP;27Kohm,5%,1/10W,TP,1608	1	SA
....4	R5015	2007-000133	R-CHIP;330Kohm,5%,1/10W,TP,1608	1	SA
....4	R2119	2007-000287	R-CHIP;100OHM,1%,1/10W,TP,1608	1	SA
....4	R2098	2007-000309	R-CHIP;10ohm,5%,1/10W,TP,1608	1	SA
....4	R2099	2007-000309	R-CHIP;10ohm,5%,1/10W,TP,1608	1	SA
....4	R2100	2007-000309	R-CHIP;10ohm,5%,1/10W,TP,1608	1	SA
....4	R2101	2007-000309	R-CHIP;10ohm,5%,1/10W,TP,1608	1	SA
....4	R2102	2007-000309	R-CHIP;10ohm,5%,1/10W,TP,1608	1	SA
....4	R2103	2007-000309	R-CHIP;10ohm,5%,1/10W,TP,1608	1	SA
....4	R2104	2007-000309	R-CHIP;10ohm,5%,1/10W,TP,1608	1	SA
....4	R2105	2007-000309	R-CHIP;10ohm,5%,1/10W,TP,1608	1	SA
....4	R3044	2007-000309	R-CHIP;10ohm,5%,1/10W,TP,1608	1	SA
....4	R3048	2007-000309	R-CHIP;10ohm,5%,1/10W,TP,1608	1	SA
....4	R3049_1M	2007-000309	R-CHIP;10ohm,5%,1/10W,TP,1608	1	SA
....4	R3050_1M	2007-000309	R-CHIP;10ohm,5%,1/10W,TP,1608	1	SA
....4	R3056	2007-000309	R-CHIP;10ohm,5%,1/10W,TP,1608	1	SA
....4	R3060	2007-000309	R-CHIP;10ohm,5%,1/10W,TP,1608	1	SA
....4	R3061	2007-000309	R-CHIP;10ohm,5%,1/10W,TP,1608	1	SA
....4	R3064	2007-000309	R-CHIP;10ohm,5%,1/10W,TP,1608	1	SA
....4	R3066	2007-000309	R-CHIP;10ohm,5%,1/10W,TP,1608	1	SA
....4	R3067	2007-000309	R-CHIP;10ohm,5%,1/10W,TP,1608	1	SA
....4	R3068	2007-000309	R-CHIP;10ohm,5%,1/10W,TP,1608	1	SA
....4	R3069	2007-000309	R-CHIP;10ohm,5%,1/10W,TP,1608	1	SA
....4	R3091	2007-000309	R-CHIP;10ohm,5%,1/10W,TP,1608	1	SA
....4	R3092	2007-000309	R-CHIP;10ohm,5%,1/10W,TP,1608	1	SA
....4	R3093	2007-000309	R-CHIP;10ohm,5%,1/10W,TP,1608	1	SA
....4	R3094	2007-000309	R-CHIP;10ohm,5%,1/10W,TP,1608	1	SA

ELECTRONIC SERVICE TIRGOVISTE

Level	Loc. No.	Code No.	Description & Specification	Q'ty	SA/SNA
....4	R3095	2007-000309	R-CHIP;10ohm,5%,1/10W,TP,1608	1	SA
....4	R3096	2007-000309	R-CHIP;10ohm,5%,1/10W,TP,1608	1	SA
....4	R3097	2007-000309	R-CHIP;10ohm,5%,1/10W,TP,1608	1	SA
....4	R3098	2007-000309	R-CHIP;10ohm,5%,1/10W,TP,1608	1	SA
....4	R5045	2007-000309	R-CHIP;10ohm,5%,1/10W,TP,1608	1	SA
....4	R5046	2007-000309	R-CHIP;10ohm,5%,1/10W,TP,1608	1	SA
....4	R5047	2007-000309	R-CHIP;10ohm,5%,1/10W,TP,1608	1	SA
....4	R2017	2007-000458	R-CHIP;18Kohm,5%,1/10W,TP,1608	1	SA
....4	R2052	2007-000458	R-CHIP;18Kohm,5%,1/10W,TP,1608	1	SA
....4	R3012	2007-000704	R-CHIP;3.6Kohm,5%,1/10W,TP,1608	1	SA
....4	R3013	2007-000704	R-CHIP;3.6Kohm,5%,1/10W,TP,1608	1	SA
....4	R1077	2007-000708	R-CHIP;3.9Kohm,1%,1/10W,TP,1608	1	SA
....4	R4122	2007-000903	R-CHIP;430ohm,1%,1/10W,TP,1608	1	SA
....4	R2019	2007-000950	R-CHIP;47ohm,5%,1/4W,TP,3216	1	SA
....4	R2020	2007-000950	R-CHIP;47ohm,5%,1/4W,TP,3216	1	SA
....4	R2021	2007-000950	R-CHIP;47ohm,5%,1/4W,TP,3216	1	SA
....4	R2066	2007-000950	R-CHIP;47ohm,5%,1/4W,TP,3216	1	SA
....4	R2067	2007-000950	R-CHIP;47ohm,5%,1/4W,TP,3216	1	SA
....4	R2076	2007-000950	R-CHIP;47ohm,5%,1/4W,TP,3216	1	SA
....4	R2078	2007-000950	R-CHIP;47ohm,5%,1/4W,TP,3216	1	SA
....4	R2082	2007-000950	R-CHIP;47ohm,5%,1/4W,TP,3216	1	SA
....4	R2083	2007-000950	R-CHIP;47ohm,5%,1/4W,TP,3216	1	SA
....4	R2094	2007-000950	R-CHIP;47ohm,5%,1/4W,TP,3216	1	SA
....4	R2095	2007-000950	R-CHIP;47ohm,5%,1/4W,TP,3216	1	SA
....4	R5035	2007-001014	R-CHIP;51OHM,5%,1/10W,TP,1608	1	SA
....4	R5039	2007-001014	R-CHIP;51OHM,5%,1/10W,TP,1608	1	SA
....4	R2030	2007-001131	R-CHIP;68ohm,1%,1/10W,TP,1608	1	SA
....4	R2056	2007-001131	R-CHIP;68ohm,1%,1/10W,TP,1608	1	SA
....4	R2014	2007-001164	R-CHIP;75ohm,1%,1/10W,TP,1608	1	SA
....4	R2015	2007-001164	R-CHIP;75ohm,1%,1/10W,TP,1608	1	SA
....4	R2025	2007-001164	R-CHIP;75ohm,1%,1/10W,TP,1608	1	SA
....4	R2026	2007-001164	R-CHIP;75ohm,1%,1/10W,TP,1608	1	SA
....4	R2027	2007-001164	R-CHIP;75ohm,1%,1/10W,TP,1608	1	SA
....4	R2032	2007-001164	R-CHIP;75ohm,1%,1/10W,TP,1608	1	SA
....4	R2062	2007-001164	R-CHIP;75ohm,1%,1/10W,TP,1608	1	SA
....4	R2085	2007-001164	R-CHIP;75ohm,1%,1/10W,TP,1608	1	SA
....4	R2086	2007-001164	R-CHIP;75ohm,1%,1/10W,TP,1608	1	SA
....4	R2087	2007-001164	R-CHIP;75ohm,1%,1/10W,TP,1608	1	SA
....4	R2036	2007-001167	R-CHIP;75ohm,5%,1/10W,TP,1608	1	SA
....4	R2038	2007-001167	R-CHIP;75ohm,5%,1/10W,TP,1608	1	SA
....4	R2041	2007-001167	R-CHIP;75ohm,5%,1/10W,TP,1608	1	SA
....4	R2046	2007-001167	R-CHIP;75ohm,5%,1/10W,TP,1608	1	SA
....4	R2047	2007-001167	R-CHIP;75ohm,5%,1/10W,TP,1608	1	SA
....4	R2048	2007-001167	R-CHIP;75ohm,5%,1/10W,TP,1608	1	SA
....4	R2054	2007-001167	R-CHIP;75ohm,5%,1/10W,TP,1608	1	SA
....4	R2059	2007-001167	R-CHIP;75ohm,5%,1/10W,TP,1608	1	SA
....4	R5016	2007-001167	R-CHIP;75ohm,5%,1/10W,TP,1608	1	SA
....4	R1057	2007-007299	R-CHIP;6.81Kohm,1%,1/10W,TP,1608	1	SA
....4	R2118	2007-007733	R-CHIP;51ohm,1%,1/10W,TP,1608	1	SA
....4	R1083	2007-008720	R-CHIP;4.7ohm,1%,1/4W,TP,3216	1	SA
....4	R1088	2007-008720	R-CHIP;4.7ohm,1%,1/4W,TP,3216	1	SA
....4	R1094	2007-008720	R-CHIP;4.7ohm,1%,1/4W,TP,3216	1	SA
....4	R1097	2007-008720	R-CHIP;4.7ohm,1%,1/4W,TP,3216	1	SA
....4	RA5001	2011-000585	R-NET;47ohm,5%,1/16W,L,CHIP,8P,TP,3.2x1.	1	SA
....4	RA5002	2011-000585	R-NET;47ohm,5%,1/16W,L,CHIP,8P,TP,3.2x1.	1	SA
....4	RA5003	2011-000585	R-NET;47ohm,5%,1/16W,L,CHIP,8P,TP,3.2x1.	1	SA
....4	RA5004	2011-000585	R-NET;47ohm,5%,1/16W,L,CHIP,8P,TP,3.2x1.	1	SA
....4	RA5005	2011-000585	R-NET;47ohm,5%,1/16W,L,CHIP,8P,TP,3.2x1.	1	SA
....4	RA5006	2011-000585	R-NET;47ohm,5%,1/16W,L,CHIP,8P,TP,3.2x1.	1	SA
....4	RA5007	2011-000585	R-NET;47ohm,5%,1/16W,L,CHIP,8P,TP,3.2x1.	1	SA

ELECTRONIC SERVICE TIRGOVISTE

Level	Loc. No.	Code No.	Description & Specification	Q'ty	SA/SNA
....4	RA5010	2011-000585	R-NET;47ohm,5%,1/16W,L,CHIP,8P,TP,3.2x1.	1	SA
....4	RA3004	2011-000651	R-NET;10ohm,5%,1/16W,L,CHIP,8P,TP,3216	1	SA
....4	RA3005	2011-000651	R-NET;10ohm,5%,1/16W,L,CHIP,8P,TP,3216	1	SA
....4	RA3007	2011-000651	R-NET;10ohm,5%,1/16W,L,CHIP,8P,TP,3216	1	SA
....4	RA3008	2011-000651	R-NET;10ohm,5%,1/16W,L,CHIP,8P,TP,3216	1	SA
....4	RA3009	2011-000651	R-NET;10ohm,5%,1/16W,L,CHIP,8P,TP,3216	1	SA
....4	RA3011	2011-000651	R-NET;10ohm,5%,1/16W,L,CHIP,8P,TP,3216	1	SA
....4	RA3001	2011-001093	R-NET;100OHM,5%,1/16W,L,CHIP,8P,TP,3216	1	SA
....4	RA3002	2011-001093	R-NET;100OHM,5%,1/16W,L,CHIP,8P,TP,3216	1	SA
....4	RA3003	2011-001093	R-NET;100OHM,5%,1/16W,L,CHIP,8P,TP,3216	1	SA
....4	RA3006	2011-001093	R-NET;100OHM,5%,1/16W,L,CHIP,8P,TP,3216	1	SA
....4	RA3010	2011-001093	R-NET;100OHM,5%,1/16W,L,CHIP,8P,TP,3216	1	SA
....4	RA3012	2011-001093	R-NET;100OHM,5%,1/16W,L,CHIP,8P,TP,3216	1	SA
....4	RA3013	2011-001093	R-NET;100OHM,5%,1/16W,L,CHIP,8P,TP,3216	1	SA
....4	RA3014	2011-001093	R-NET;100OHM,5%,1/16W,L,CHIP,8P,TP,3216	1	SA
....4	RA3015	2011-001093	R-NET;100OHM,5%,1/16W,L,CHIP,8P,TP,3216	1	SA
....4	RA3016	2011-001093	R-NET;100OHM,5%,1/16W,L,CHIP,8P,TP,3216	1	SA
....4	RA3017	2011-001093	R-NET;100OHM,5%,1/16W,L,CHIP,8P,TP,3216	1	SA
....4	RA3018	2011-001093	R-NET;100OHM,5%,1/16W,L,CHIP,8P,TP,3216	1	SA
....4	RA3019	2011-001093	R-NET;100OHM,5%,1/16W,L,CHIP,8P,TP,3216	1	SA
....4	RA3020	2011-001093	R-NET;100OHM,5%,1/16W,L,CHIP,8P,TP,3216	1	SA
....4	RA4001	2011-001093	R-NET;100OHM,5%,1/16W,L,CHIP,8P,TP,3216	1	SA
....4	RA4002	2011-001093	R-NET;100OHM,5%,1/16W,L,CHIP,8P,TP,3216	1	SA
....4	C1158	2203-000125	C-CER,CHIP;1.2nF,10%,50V,X7R,TP,1608,-	1	SA
....4	C1037	2203-000140	C-CER,CHIP;1.5nF,10%,50V,X7R,1608	1	SA
....4	C1062	2203-000140	C-CER,CHIP;1.5nF,10%,50V,X7R,1608	1	SA
....4	C1004	2203-000189	C-CER,CHIP;100nF,+80-20%,25V,Y5V,1608	1	SA
....4	C1006	2203-000189	C-CER,CHIP;100nF,+80-20%,25V,Y5V,1608	1	SA
....4	C1008	2203-000189	C-CER,CHIP;100nF,+80-20%,25V,Y5V,1608	1	SA
....4	C1016	2203-000189	C-CER,CHIP;100nF,+80-20%,25V,Y5V,1608	1	SA
....4	C1021	2203-000189	C-CER,CHIP;100nF,+80-20%,25V,Y5V,1608	1	SA
....4	C1025	2203-000189	C-CER,CHIP;100nF,+80-20%,25V,Y5V,1608	1	SA
....4	C1027	2203-000189	C-CER,CHIP;100nF,+80-20%,25V,Y5V,1608	1	SA
....4	C1043	2203-000189	C-CER,CHIP;100nF,+80-20%,25V,Y5V,1608	1	SA
....4	C1046	2203-000189	C-CER,CHIP;100nF,+80-20%,25V,Y5V,1608	1	SA
....4	C1052	2203-000189	C-CER,CHIP;100nF,+80-20%,25V,Y5V,1608	1	SA
....4	C1053	2203-000189	C-CER,CHIP;100nF,+80-20%,25V,Y5V,1608	1	SA
....4	C1054	2203-000189	C-CER,CHIP;100nF,+80-20%,25V,Y5V,1608	1	SA
....4	C1055	2203-000189	C-CER,CHIP;100nF,+80-20%,25V,Y5V,1608	1	SA
....4	C1075	2203-000189	C-CER,CHIP;100nF,+80-20%,25V,Y5V,1608	1	SA
....4	C1084	2203-000189	C-CER,CHIP;100nF,+80-20%,25V,Y5V,1608	1	SA
....4	C1086	2203-000189	C-CER,CHIP;100nF,+80-20%,25V,Y5V,1608	1	SA
....4	C1087	2203-000189	C-CER,CHIP;100nF,+80-20%,25V,Y5V,1608	1	SA
....4	C1097	2203-000189	C-CER,CHIP;100nF,+80-20%,25V,Y5V,1608	1	SA
....4	C1098	2203-000189	C-CER,CHIP;100nF,+80-20%,25V,Y5V,1608	1	SA
....4	C1103	2203-000189	C-CER,CHIP;100nF,+80-20%,25V,Y5V,1608	1	SA
....4	C1105	2203-000189	C-CER,CHIP;100nF,+80-20%,25V,Y5V,1608	1	SA
....4	C1109	2203-000189	C-CER,CHIP;100nF,+80-20%,25V,Y5V,1608	1	SA
....4	C1124	2203-000189	C-CER,CHIP;100nF,+80-20%,25V,Y5V,1608	1	SA
....4	C1132	2203-000189	C-CER,CHIP;100nF,+80-20%,25V,Y5V,1608	1	SA
....4	C1133	2203-000189	C-CER,CHIP;100nF,+80-20%,25V,Y5V,1608	1	SA
....4	C1141	2203-000189	C-CER,CHIP;100nF,+80-20%,25V,Y5V,1608	1	SA
....4	C1159	2203-000189	C-CER,CHIP;100nF,+80-20%,25V,Y5V,1608	1	SA
....4	C1168	2203-000189	C-CER,CHIP;100nF,+80-20%,25V,Y5V,1608	1	SA
....4	C2002	2203-000189	C-CER,CHIP;100nF,+80-20%,25V,Y5V,1608	1	SA
....4	C2018	2203-000189	C-CER,CHIP;100nF,+80-20%,25V,Y5V,1608	1	SA
....4	C3001	2203-000189	C-CER,CHIP;100nF,+80-20%,25V,Y5V,1608	1	SA
....4	C3005	2203-000189	C-CER,CHIP;100nF,+80-20%,25V,Y5V,1608	1	SA
....4	C3034	2203-000189	C-CER,CHIP;100nF,+80-20%,25V,Y5V,1608	1	SA
....4	C4016	2203-000189	C-CER,CHIP;100nF,+80-20%,25V,Y5V,1608	1	SA

ELECTRONIC SERVICE TIRGOVISTE

Level	Loc. No.	Code No.	Description & Specification	Q'ty	SA/SNA
....4	C4017	2203-000189	C-CER,CHIP;100nF,+80-20%,25V,Y5V,1608	1	SA
....4	C4018	2203-000189	C-CER,CHIP;100nF,+80-20%,25V,Y5V,1608	1	SA
....4	C4019	2203-000189	C-CER,CHIP;100nF,+80-20%,25V,Y5V,1608	1	SA
....4	C4020	2203-000189	C-CER,CHIP;100nF,+80-20%,25V,Y5V,1608	1	SA
....4	C4021	2203-000189	C-CER,CHIP;100nF,+80-20%,25V,Y5V,1608	1	SA
....4	C4022	2203-000189	C-CER,CHIP;100nF,+80-20%,25V,Y5V,1608	1	SA
....4	C4025	2203-000189	C-CER,CHIP;100nF,+80-20%,25V,Y5V,1608	1	SA
....4	C4026	2203-000189	C-CER,CHIP;100nF,+80-20%,25V,Y5V,1608	1	SA
....4	C4027	2203-000189	C-CER,CHIP;100nF,+80-20%,25V,Y5V,1608	1	SA
....4	C4028	2203-000189	C-CER,CHIP;100nF,+80-20%,25V,Y5V,1608	1	SA
....4	C4029	2203-000189	C-CER,CHIP;100nF,+80-20%,25V,Y5V,1608	1	SA
....4	C4031	2203-000189	C-CER,CHIP;100nF,+80-20%,25V,Y5V,1608	1	SA
....4	C4032	2203-000189	C-CER,CHIP;100nF,+80-20%,25V,Y5V,1608	1	SA
....4	C4034	2203-000189	C-CER,CHIP;100nF,+80-20%,25V,Y5V,1608	1	SA
....4	C4035	2203-000189	C-CER,CHIP;100nF,+80-20%,25V,Y5V,1608	1	SA
....4	C4036	2203-000189	C-CER,CHIP;100nF,+80-20%,25V,Y5V,1608	1	SA
....4	C4038	2203-000189	C-CER,CHIP;100nF,+80-20%,25V,Y5V,1608	1	SA
....4	C4039	2203-000189	C-CER,CHIP;100nF,+80-20%,25V,Y5V,1608	1	SA
....4	C4040	2203-000189	C-CER,CHIP;100nF,+80-20%,25V,Y5V,1608	1	SA
....4	C4041	2203-000189	C-CER,CHIP;100nF,+80-20%,25V,Y5V,1608	1	SA
....4	C4042	2203-000189	C-CER,CHIP;100nF,+80-20%,25V,Y5V,1608	1	SA
....4	C4043	2203-000189	C-CER,CHIP;100nF,+80-20%,25V,Y5V,1608	1	SA
....4	C4045	2203-000189	C-CER,CHIP;100nF,+80-20%,25V,Y5V,1608	1	SA
....4	C4046	2203-000189	C-CER,CHIP;100nF,+80-20%,25V,Y5V,1608	1	SA
....4	C4048	2203-000189	C-CER,CHIP;100nF,+80-20%,25V,Y5V,1608	1	SA
....4	C4049	2203-000189	C-CER,CHIP;100nF,+80-20%,25V,Y5V,1608	1	SA
....4	C4052	2203-000189	C-CER,CHIP;100nF,+80-20%,25V,Y5V,1608	1	SA
....4	C4053	2203-000189	C-CER,CHIP;100nF,+80-20%,25V,Y5V,1608	1	SA
....4	C4054	2203-000189	C-CER,CHIP;100nF,+80-20%,25V,Y5V,1608	1	SA
....4	C4055	2203-000189	C-CER,CHIP;100nF,+80-20%,25V,Y5V,1608	1	SA
....4	C4056	2203-000189	C-CER,CHIP;100nF,+80-20%,25V,Y5V,1608	1	SA
....4	C4059	2203-000189	C-CER,CHIP;100nF,+80-20%,25V,Y5V,1608	1	SA
....4	C4060	2203-000189	C-CER,CHIP;100nF,+80-20%,25V,Y5V,1608	1	SA
....4	C4061	2203-000189	C-CER,CHIP;100nF,+80-20%,25V,Y5V,1608	1	SA
....4	C4062	2203-000189	C-CER,CHIP;100nF,+80-20%,25V,Y5V,1608	1	SA
....4	C4063	2203-000189	C-CER,CHIP;100nF,+80-20%,25V,Y5V,1608	1	SA
....4	C4067	2203-000189	C-CER,CHIP;100nF,+80-20%,25V,Y5V,1608	1	SA
....4	C4068	2203-000189	C-CER,CHIP;100nF,+80-20%,25V,Y5V,1608	1	SA
....4	C4069	2203-000189	C-CER,CHIP;100nF,+80-20%,25V,Y5V,1608	1	SA
....4	C4070	2203-000189	C-CER,CHIP;100nF,+80-20%,25V,Y5V,1608	1	SA
....4	C4071	2203-000189	C-CER,CHIP;100nF,+80-20%,25V,Y5V,1608	1	SA
....4	C4073	2203-000189	C-CER,CHIP;100nF,+80-20%,25V,Y5V,1608	1	SA
....4	C4076	2203-000189	C-CER,CHIP;100nF,+80-20%,25V,Y5V,1608	1	SA
....4	C4077	2203-000189	C-CER,CHIP;100nF,+80-20%,25V,Y5V,1608	1	SA
....4	C4080	2203-000189	C-CER,CHIP;100nF,+80-20%,25V,Y5V,1608	1	SA
....4	C4081	2203-000189	C-CER,CHIP;100nF,+80-20%,25V,Y5V,1608	1	SA
....4	C4083	2203-000189	C-CER,CHIP;100nF,+80-20%,25V,Y5V,1608	1	SA
....4	C4084	2203-000189	C-CER,CHIP;100nF,+80-20%,25V,Y5V,1608	1	SA
....4	C4085	2203-000189	C-CER,CHIP;100nF,+80-20%,25V,Y5V,1608	1	SA
....4	C4086	2203-000189	C-CER,CHIP;100nF,+80-20%,25V,Y5V,1608	1	SA
....4	C4095	2203-000189	C-CER,CHIP;100nF,+80-20%,25V,Y5V,1608	1	SA
....4	C4128	2203-000189	C-CER,CHIP;100nF,+80-20%,25V,Y5V,1608	1	SA
....4	C5026	2203-000189	C-CER,CHIP;100nF,+80-20%,25V,Y5V,1608	1	SA
....4	C5038	2203-000189	C-CER,CHIP;100nF,+80-20%,25V,Y5V,1608	1	SA
....4	C5043	2203-000189	C-CER,CHIP;100nF,+80-20%,25V,Y5V,1608	1	SA
....4	C5022	2203-000221	C-CER,CHIP;100nF,20%,50V,Y5V,TP,3216	1	SA
....4	C1050	2203-000236	C-CER,CHIP;0.1nF,5%,50V,C0G,1608	1	SA
....4	C1134	2203-000236	C-CER,CHIP;0.1nF,5%,50V,C0G,1608	1	SA
....4	C1135	2203-000236	C-CER,CHIP;0.1nF,5%,50V,C0G,1608	1	SA
....4	C1161	2203-000236	C-CER,CHIP;0.1nF,5%,50V,C0G,1608	1	SA

ELECTRONIC SERVICE TIRGOVISTE

Level	Loc. No.	Code No.	Description & Specification	Q'ty	SA/SNA
....4	C1162	2203-000236	C-CER,CHIP;0.1nF,5%,50V,C0G,1608	1	SA
....4	C1163	2203-000236	C-CER,CHIP;0.1nF,5%,50V,C0G,1608	1	SA
....4	C2003	2203-000236	C-CER,CHIP;0.1nF,5%,50V,C0G,1608	1	SA
....4	C2004	2203-000236	C-CER,CHIP;0.1nF,5%,50V,C0G,1608	1	SA
....4	C2005	2203-000236	C-CER,CHIP;0.1nF,5%,50V,C0G,1608	1	SA
....4	C2006	2203-000236	C-CER,CHIP;0.1nF,5%,50V,C0G,1608	1	SA
....4	C2007	2203-000236	C-CER,CHIP;0.1nF,5%,50V,C0G,1608	1	SA
....4	C2011	2203-000236	C-CER,CHIP;0.1nF,5%,50V,C0G,1608	1	SA
....4	C2012	2203-000236	C-CER,CHIP;0.1nF,5%,50V,C0G,1608	1	SA
....4	C2013	2203-000236	C-CER,CHIP;0.1nF,5%,50V,C0G,1608	1	SA
....4	C2014	2203-000236	C-CER,CHIP;0.1nF,5%,50V,C0G,1608	1	SA
....4	C2019	2203-000236	C-CER,CHIP;0.1nF,5%,50V,C0G,1608	1	SA
....4	C2020	2203-000236	C-CER,CHIP;0.1nF,5%,50V,C0G,1608	1	SA
....4	C2022_DE	2203-000236	C-CER,CHIP;0.1nF,5%,50V,C0G,1608	1	SA
....4	C2023	2203-000236	C-CER,CHIP;0.1nF,5%,50V,C0G,1608	1	SA
....4	C2024	2203-000236	C-CER,CHIP;0.1nF,5%,50V,C0G,1608	1	SA
....4	C2025	2203-000236	C-CER,CHIP;0.1nF,5%,50V,C0G,1608	1	SA
....4	C2027	2203-000236	C-CER,CHIP;0.1nF,5%,50V,C0G,1608	1	SA
....4	C2028	2203-000236	C-CER,CHIP;0.1nF,5%,50V,C0G,1608	1	SA
....4	C2032	2203-000236	C-CER,CHIP;0.1nF,5%,50V,C0G,1608	1	SA
....4	C3024	2203-000236	C-CER,CHIP;0.1nF,5%,50V,C0G,1608	1	SA
....4	C3025	2203-000236	C-CER,CHIP;0.1nF,5%,50V,C0G,1608	1	SA
....4	C5059	2203-000236	C-CER,CHIP;0.1nF,5%,50V,C0G,1608	1	SA
....4	C5068	2203-000236	C-CER,CHIP;0.1nF,5%,50V,C0G,1608	1	SA
....4	C5069	2203-000236	C-CER,CHIP;0.1nF,5%,50V,C0G,1608	1	SA
....4	C5084	2203-000236	C-CER,CHIP;0.1nF,5%,50V,C0G,1608	1	SA
....4	C5085	2203-000236	C-CER,CHIP;0.1nF,5%,50V,C0G,1608	1	SA
....4	C1002	2203-000257	C-CER,CHIP;10nF,10%,50V,X7R,1608	1	SA
....4	C1005	2203-000257	C-CER,CHIP;10nF,10%,50V,X7R,1608	1	SA
....4	C1013	2203-000257	C-CER,CHIP;10nF,10%,50V,X7R,1608	1	SA
....4	C1022	2203-000257	C-CER,CHIP;10nF,10%,50V,X7R,1608	1	SA
....4	C1026	2203-000257	C-CER,CHIP;10nF,10%,50V,X7R,1608	1	SA
....4	C1034	2203-000257	C-CER,CHIP;10nF,10%,50V,X7R,1608	1	SA
....4	C1049	2203-000257	C-CER,CHIP;10nF,10%,50V,X7R,1608	1	SA
....4	C1094	2203-000257	C-CER,CHIP;10nF,10%,50V,X7R,1608	1	SA
....4	C3035	2203-000257	C-CER,CHIP;10nF,10%,50V,X7R,1608	1	SA
....4	C4005	2203-000257	C-CER,CHIP;10nF,10%,50V,X7R,1608	1	SA
....4	C4006	2203-000257	C-CER,CHIP;10nF,10%,50V,X7R,1608	1	SA
....4	C4007	2203-000257	C-CER,CHIP;10nF,10%,50V,X7R,1608	1	SA
....4	C4008	2203-000257	C-CER,CHIP;10nF,10%,50V,X7R,1608	1	SA
....4	C4009	2203-000257	C-CER,CHIP;10nF,10%,50V,X7R,1608	1	SA
....4	C4124	2203-000257	C-CER,CHIP;10nF,10%,50V,X7R,1608	1	SA
....4	C5006	2203-000257	C-CER,CHIP;10nF,10%,50V,X7R,1608	1	SA
....4	C5007	2203-000257	C-CER,CHIP;10nF,10%,50V,X7R,1608	1	SA
....4	C5008	2203-000257	C-CER,CHIP;10nF,10%,50V,X7R,1608	1	SA
....4	C5009	2203-000257	C-CER,CHIP;10nF,10%,50V,X7R,1608	1	SA
....4	C5010	2203-000257	C-CER,CHIP;10nF,10%,50V,X7R,1608	1	SA
....4	C5017	2203-000257	C-CER,CHIP;10nF,10%,50V,X7R,1608	1	SA
....4	C5036	2203-000257	C-CER,CHIP;10nF,10%,50V,X7R,1608	1	SA
....4	C5040	2203-000257	C-CER,CHIP;10nF,10%,50V,X7R,1608	1	SA
....4	C5061	2203-000257	C-CER,CHIP;10nF,10%,50V,X7R,1608	1	SA
....4	C5062	2203-000257	C-CER,CHIP;10nF,10%,50V,X7R,1608	1	SA
....4	C5064	2203-000257	C-CER,CHIP;10nF,10%,50V,X7R,1608	1	SA
....4	C1110	2203-000426	C-CER,CHIP;0.018nF,5%,50V,C0G,1608	1	SA
....4	C1121	2203-000440	C-CER,CHIP;1nF,10%,50V,X7R,1608	1	SA
....4	C3002	2203-000440	C-CER,CHIP;1nF,10%,50V,X7R,1608	1	SA
....4	C3003	2203-000440	C-CER,CHIP;1nF,10%,50V,X7R,1608	1	SA
....4	C3007	2203-000440	C-CER,CHIP;1nF,10%,50V,X7R,1608	1	SA
....4	C3020	2203-000440	C-CER,CHIP;1nF,10%,50V,X7R,1608	1	SA
....4	C3021	2203-000440	C-CER,CHIP;1nF,10%,50V,X7R,1608	1	SA

ELECTRONIC SERVICE TIRGOVISTE

Level	Loc. No.	Code No.	Description & Specification	Q'ty	SA/SNA
....4	C3029	2203-000440	C-CER,CHIP;1nF,10%,50V,X7R,1608	1	SA
....4	C4119	2203-000440	C-CER,CHIP;1nF,10%,50V,X7R,1608	1	SA
....4	C5087	2203-000440	C-CER,CHIP;1nF,10%,50V,X7R,1608	1	SA
....4	C4058	2203-000531	C-CER,CHIP;2.7nF,10%,50V,X7R,1608	1	SA
....4	C4066	2203-000531	C-CER,CHIP;2.7nF,10%,50V,X7R,1608	1	SA
....4	C4001	2203-000552	C-CER,CHIP;0.02nF,5%,50V,C0G,1608	1	SA
....4	C4011	2203-000552	C-CER,CHIP;0.02nF,5%,50V,C0G,1608	1	SA
....4	C1070	2203-000626	C-CER,CHIP;0.022nF,5%,50V,C0G,1608	1	SA
....4	C1082	2203-000626	C-CER,CHIP;0.022nF,5%,50V,C0G,1608	1	SA
....4	C3012	2203-000626	C-CER,CHIP;0.022nF,5%,50V,C0G,1608	1	SA
....4	C3013	2203-000626	C-CER,CHIP;0.022nF,5%,50V,C0G,1608	1	SA
....4	C3030	2203-000626	C-CER,CHIP;0.022nF,5%,50V,C0G,1608	1	SA
....4	C3031	2203-000626	C-CER,CHIP;0.022nF,5%,50V,C0G,1608	1	SA
....4	C1111	2203-000715	C-CER,CHIP;3.3nF,10%,50V,X7R,1608	1	SA
....4	C1142	2203-000783	C-CER,CHIP;0.33nF,5%,50V,C0G,1608	1	SA
....4	C1152	2203-000783	C-CER,CHIP;0.33nF,5%,50V,C0G,1608	1	SA
....4	C2009	2203-000783	C-CER,CHIP;0.33nF,5%,50V,C0G,1608	1	SA
....4	C2010	2203-000783	C-CER,CHIP;0.33nF,5%,50V,C0G,1608	1	SA
....4	C2015	2203-000783	C-CER,CHIP;0.33nF,5%,50V,C0G,1608	1	SA
....4	C2016	2203-000783	C-CER,CHIP;0.33nF,5%,50V,C0G,1608	1	SA
....4	C2026	2203-000783	C-CER,CHIP;0.33nF,5%,50V,C0G,1608	1	SA
....4	C5076	2203-000783	C-CER,CHIP;0.33nF,5%,50V,C0G,1608	1	SA
....4	C5077	2203-000783	C-CER,CHIP;0.33nF,5%,50V,C0G,1608	1	SA
....4	C1100	2203-000798	C-CER,CHIP;33nF,10%,16V,X7R,TP,1608,-	1	SA
....4	C1101	2203-000798	C-CER,CHIP;33nF,10%,16V,X7R,TP,1608,-	1	SA
....4	C2029	2203-000815	C-CER,CHIP;0.033nF,5%,50V,C0G,1608	1	SA
....4	C2030	2203-000815	C-CER,CHIP;0.033nF,5%,50V,C0G,1608	1	SA
....4	C2031	2203-000815	C-CER,CHIP;0.033nF,5%,50V,C0G,1608	1	SA
....4	C5056	2203-000815	C-CER,CHIP;0.033nF,5%,50V,C0G,1608	1	SA
....4	C5057	2203-000815	C-CER,CHIP;0.033nF,5%,50V,C0G,1608	1	SA
....4	C5058	2203-000815	C-CER,CHIP;0.033nF,5%,50V,C0G,1608	1	SA
....4	C1119	2203-000888	C-CER,CHIP;4.7nF,10%,50V,X7R,1608	1	SA
....4	C1120	2203-000888	C-CER,CHIP;4.7nF,10%,50V,X7R,1608	1	SA
....4	C4003	2203-000888	C-CER,CHIP;4.7nF,10%,50V,X7R,1608	1	SA
....4	C4004	2203-000888	C-CER,CHIP;4.7nF,10%,50V,X7R,1608	1	SA
....4	C5003	2203-000888	C-CER,CHIP;4.7nF,10%,50V,X7R,1608	1	SA
....4	C5004	2203-000888	C-CER,CHIP;4.7nF,10%,50V,X7R,1608	1	SA
....4	C1063	2203-000972	C-CER,CHIP;47nF,10%,16V,X7R,1608	1	SA
....4	C2008	2203-000998	C-CER,CHIP;0.047nF,5%,50V,C0G,1608	1	SA
....4	C2021	2203-000998	C-CER,CHIP;0.047nF,5%,50V,C0G,1608	1	SA
....4	C5063	2203-000998	C-CER,CHIP;0.047nF,5%,50V,C0G,1608	1	SA
....4	C1056	2203-001402	C-CER,CHIP;220nF,+80-20%,16V,Y5V,TP,1608	1	SA
....4	C1164	2203-001607	C-CER,CHIP;0.22nF,5%,50V,NP0,1608	1	SA
....4	C1114	2203-001652	C-CER,CHIP;470nF,+80-20%,16V,Y5V,1608	1	SA
....4	C1116	2203-001652	C-CER,CHIP;470nF,+80-20%,16V,Y5V,1608	1	SA
....4	C1038	2203-001656	C-CER,CHIP;0.47nF,5%,50V,NP0,1608	1	SA
....4	C1061	2203-001656	C-CER,CHIP;0.47nF,5%,50V,NP0,1608	1	SA
....4	C3039	2203-001656	C-CER,CHIP;0.47nF,5%,50V,NP0,1608	1	SA
....4	C1117	2203-001724	C-CER,CHIP;4700nF,+80-20%,16V,Y5V,3216	1	SA
....4	C1003	2203-005005	C-CER,CHIP;100nF,10%,16V,X7R,1608	1	SA
....4	C1011	2203-005005	C-CER,CHIP;100nF,10%,16V,X7R,1608	1	SA
....4	C1032	2203-005005	C-CER,CHIP;100nF,10%,16V,X7R,1608	1	SA
....4	C1039	2203-005005	C-CER,CHIP;100nF,10%,16V,X7R,1608	1	SA
....4	C1066	2203-005005	C-CER,CHIP;100nF,10%,16V,X7R,1608	1	SA
....4	C1068	2203-005005	C-CER,CHIP;100nF,10%,16V,X7R,1608	1	SA
....4	C1071	2203-005005	C-CER,CHIP;100nF,10%,16V,X7R,1608	1	SA
....4	C1072	2203-005005	C-CER,CHIP;100nF,10%,16V,X7R,1608	1	SA
....4	C1073	2203-005005	C-CER,CHIP;100nF,10%,16V,X7R,1608	1	SA
....4	C1074	2203-005005	C-CER,CHIP;100nF,10%,16V,X7R,1608	1	SA
....4	C1078	2203-005005	C-CER,CHIP;100nF,10%,16V,X7R,1608	1	SA

ELECTRONIC SERVICE TIRGOVISTE

Level	Loc. No.	Code No.	Description & Specification	Q'ty	SA/SNA
....4	C1079	2203-005005	C-CER,CHIP;100nF,10%,16V,X7R,1608	1	SA
....4	C1093	2203-005005	C-CER,CHIP;100nF,10%,16V,X7R,1608	1	SA
....4	C1104	2203-005005	C-CER,CHIP;100nF,10%,16V,X7R,1608	1	SA
....4	C1108	2203-005005	C-CER,CHIP;100nF,10%,16V,X7R,1608	1	SA
....4	C1129	2203-005005	C-CER,CHIP;100nF,10%,16V,X7R,1608	1	SA
....4	C1130	2203-005005	C-CER,CHIP;100nF,10%,16V,X7R,1608	1	SA
....4	C1148	2203-005005	C-CER,CHIP;100nF,10%,16V,X7R,1608	1	SA
....4	C1169	2203-005005	C-CER,CHIP;100nF,10%,16V,X7R,1608	1	SA
....4	C1171	2203-005005	C-CER,CHIP;100nF,10%,16V,X7R,1608	1	SA
....4	C1173	2203-005005	C-CER,CHIP;100nF,10%,16V,X7R,1608	1	SA
....4	C3009	2203-005005	C-CER,CHIP;100nF,10%,16V,X7R,1608	1	SA
....4	C3010	2203-005005	C-CER,CHIP;100nF,10%,16V,X7R,1608	1	SA
....4	C3014	2203-005005	C-CER,CHIP;100nF,10%,16V,X7R,1608	1	SA
....4	C3015	2203-005005	C-CER,CHIP;100nF,10%,16V,X7R,1608	1	SA
....4	C3016	2203-005005	C-CER,CHIP;100nF,10%,16V,X7R,1608	1	SA
....4	C3018	2203-005005	C-CER,CHIP;100nF,10%,16V,X7R,1608	1	SA
....4	C3019	2203-005005	C-CER,CHIP;100nF,10%,16V,X7R,1608	1	SA
....4	C3022	2203-005005	C-CER,CHIP;100nF,10%,16V,X7R,1608	1	SA
....4	C3026	2203-005005	C-CER,CHIP;100nF,10%,16V,X7R,1608	1	SA
....4	C3027	2203-005005	C-CER,CHIP;100nF,10%,16V,X7R,1608	1	SA
....4	C3032	2203-005005	C-CER,CHIP;100nF,10%,16V,X7R,1608	1	SA
....4	C3037	2203-005005	C-CER,CHIP;100nF,10%,16V,X7R,1608	1	SA
....4	C3040	2203-005005	C-CER,CHIP;100nF,10%,16V,X7R,1608	1	SA
....4	C3042	2203-005005	C-CER,CHIP;100nF,10%,16V,X7R,1608	1	SA
....4	C3044	2203-005005	C-CER,CHIP;100nF,10%,16V,X7R,1608	1	SA
....4	C3046	2203-005005	C-CER,CHIP;100nF,10%,16V,X7R,1608	1	SA
....4	C3047	2203-005005	C-CER,CHIP;100nF,10%,16V,X7R,1608	1	SA
....4	C3049	2203-005005	C-CER,CHIP;100nF,10%,16V,X7R,1608	1	SA
....4	C4002	2203-005005	C-CER,CHIP;100nF,10%,16V,X7R,1608	1	SA
....4	C4125	2203-005005	C-CER,CHIP;100nF,10%,16V,X7R,1608	1	SA
....4	C4126	2203-005005	C-CER,CHIP;100nF,10%,16V,X7R,1608	1	SA
....4	C4129	2203-005005	C-CER,CHIP;100nF,10%,16V,X7R,1608	1	SA
....4	C5001	2203-005005	C-CER,CHIP;100nF,10%,16V,X7R,1608	1	SA
....4	C5002	2203-005005	C-CER,CHIP;100nF,10%,16V,X7R,1608	1	SA
....4	C5011	2203-005005	C-CER,CHIP;100nF,10%,16V,X7R,1608	1	SA
....4	C5012	2203-005005	C-CER,CHIP;100nF,10%,16V,X7R,1608	1	SA
....4	C5021	2203-005005	C-CER,CHIP;100nF,10%,16V,X7R,1608	1	SA
....4	C5023	2203-005005	C-CER,CHIP;100nF,10%,16V,X7R,1608	1	SA
....4	C5039	2203-005005	C-CER,CHIP;100nF,10%,16V,X7R,1608	1	SA
....4	C5054	2203-005005	C-CER,CHIP;100nF,10%,16V,X7R,1608	1	SA
....4	C1143	2203-005030	C-CER,CHIP;470nF,+80-20%,50V,Y5V,TP,3216	1	SA
....4	C1153	2203-005030	C-CER,CHIP;470nF,+80-20%,50V,Y5V,TP,3216	1	SA
....4	C1031	2203-005065	C-CER,CHIP;1000nF,+80-20%,10V,Y5V,1608	1	SA
....4	C1040	2203-005065	C-CER,CHIP;1000nF,+80-20%,10V,Y5V,1608	1	SA
....4	C1155	2203-005065	C-CER,CHIP;1000nF,+80-20%,10V,Y5V,1608	1	SA
....4	C2038	2203-005065	C-CER,CHIP;1000nF,+80-20%,10V,Y5V,1608	1	SA
....4	C3023	2203-005065	C-CER,CHIP;1000nF,+80-20%,10V,Y5V,1608	1	SA
....4	C3033	2203-005065	C-CER,CHIP;1000nF,+80-20%,10V,Y5V,1608	1	SA
....4	C4117	2203-005065	C-CER,CHIP;1000nF,+80-20%,10V,Y5V,1608	1	SA
....4	C4118	2203-005065	C-CER,CHIP;1000nF,+80-20%,10V,Y5V,1608	1	SA
....4	C1122	2203-005249	C-CER,CHIP;100nF,10%,50V,X7R,1608	1	SA
....4	C1131	2203-005249	C-CER,CHIP;100nF,10%,50V,X7R,1608	1	SA
....4	C1137	2203-005249	C-CER,CHIP;100nF,10%,50V,X7R,1608	1	SA
....4	C1138	2203-005249	C-CER,CHIP;100nF,10%,50V,X7R,1608	1	SA
....4	C1140	2203-005249	C-CER,CHIP;100nF,10%,50V,X7R,1608	1	SA
....4	C1144	2203-005249	C-CER,CHIP;100nF,10%,50V,X7R,1608	1	SA
....4	C1145	2203-005249	C-CER,CHIP;100nF,10%,50V,X7R,1608	1	SA
....4	C1146	2203-005249	C-CER,CHIP;100nF,10%,50V,X7R,1608	1	SA
....4	C1147	2203-005249	C-CER,CHIP;100nF,10%,50V,X7R,1608	1	SA
....4	C1149	2203-005249	C-CER,CHIP;100nF,10%,50V,X7R,1608	1	SA

ELECTRONIC SERVICE TIRGOVISTE

Level	Loc. No.	Code No.	Description & Specification	Q'ty	SA/SNA
....4	C1150	2203-005249	C-CER,CHIP;100nF,10%,50V,X7R,1608	1	SA
....4	C1154	2203-005249	C-CER,CHIP;100nF,10%,50V,X7R,1608	1	SA
....4	C1156	2203-005249	C-CER,CHIP;100nF,10%,50V,X7R,1608	1	SA
....4	C1157	2203-005249	C-CER,CHIP;100nF,10%,50V,X7R,1608	1	SA
....4	C1160	2203-005249	C-CER,CHIP;100nF,10%,50V,X7R,1608	1	SA
....4	C1166	2203-005249	C-CER,CHIP;100nF,10%,50V,X7R,1608	1	SA
....4	C4014	2203-005533	C-CER,CHIP;1000nF,20%,6.3V,X7R,TP,1608	1	SA
....4	C4015	2203-005533	C-CER,CHIP;1000nF,20%,6.3V,X7R,TP,1608	1	SA
....4	C4024	2203-005533	C-CER,CHIP;1000nF,20%,6.3V,X7R,TP,1608	1	SA
....4	C4033	2203-005533	C-CER,CHIP;1000nF,20%,6.3V,X7R,TP,1608	1	SA
....4	C4037	2203-005533	C-CER,CHIP;1000nF,20%,6.3V,X7R,TP,1608	1	SA
....4	C4044	2203-005533	C-CER,CHIP;1000nF,20%,6.3V,X7R,TP,1608	1	SA
....4	C4050	2203-005533	C-CER,CHIP;1000nF,20%,6.3V,X7R,TP,1608	1	SA
....4	C4065	2203-005533	C-CER,CHIP;1000nF,20%,6.3V,X7R,TP,1608	1	SA
....4	C4074	2203-005533	C-CER,CHIP;1000nF,20%,6.3V,X7R,TP,1608	1	SA
....4	C4075	2203-005533	C-CER,CHIP;1000nF,20%,6.3V,X7R,TP,1608	1	SA
....4	C4078	2203-005533	C-CER,CHIP;1000nF,20%,6.3V,X7R,TP,1608	1	SA
....4	C4079	2203-005533	C-CER,CHIP;1000nF,20%,6.3V,X7R,TP,1608	1	SA
....4	C4087	2203-005533	C-CER,CHIP;1000nF,20%,6.3V,X7R,TP,1608	1	SA
....4	C4088	2203-005533	C-CER,CHIP;1000nF,20%,6.3V,X7R,TP,1608	1	SA
....4	C4089	2203-005533	C-CER,CHIP;1000nF,20%,6.3V,X7R,TP,1608	1	SA
....4	C4090	2203-005533	C-CER,CHIP;1000nF,20%,6.3V,X7R,TP,1608	1	SA
....4	C4091	2203-005533	C-CER,CHIP;1000nF,20%,6.3V,X7R,TP,1608	1	SA
....4	C4092	2203-005533	C-CER,CHIP;1000nF,20%,6.3V,X7R,TP,1608	1	SA
....4	C4093	2203-005533	C-CER,CHIP;1000nF,20%,6.3V,X7R,TP,1608	1	SA
....4	C4094	2203-005533	C-CER,CHIP;1000nF,20%,6.3V,X7R,TP,1608	1	SA
....4	C1001	2203-006333	C-CER,CHIP;10000nF,20%,16V,X5R,TP,3216	1	SA
....4	C1012	2203-006333	C-CER,CHIP;10000nF,20%,16V,X5R,TP,3216	1	SA
....4	C1014	2203-006333	C-CER,CHIP;10000nF,20%,16V,X5R,TP,3216	1	SA
....4	C1017	2203-006333	C-CER,CHIP;10000nF,20%,16V,X5R,TP,3216	1	SA
....4	C1018	2203-006333	C-CER,CHIP;10000nF,20%,16V,X5R,TP,3216	1	SA
....4	C1019	2203-006333	C-CER,CHIP;10000nF,20%,16V,X5R,TP,3216	1	SA
....4	C1020	2203-006333	C-CER,CHIP;10000nF,20%,16V,X5R,TP,3216	1	SA
....4	C1023	2203-006333	C-CER,CHIP;10000nF,20%,16V,X5R,TP,3216	1	SA
....4	C1024	2203-006333	C-CER,CHIP;10000nF,20%,16V,X5R,TP,3216	1	SA
....4	C1030	2203-006333	C-CER,CHIP;10000nF,20%,16V,X5R,TP,3216	1	SA
....4	C1033	2203-006333	C-CER,CHIP;10000nF,20%,16V,X5R,TP,3216	1	SA
....4	C1035	2203-006333	C-CER,CHIP;10000nF,20%,16V,X5R,TP,3216	1	SA
....4	C1041	2203-006333	C-CER,CHIP;10000nF,20%,16V,X5R,TP,3216	1	SA
....4	C1044	2203-006333	C-CER,CHIP;10000nF,20%,16V,X5R,TP,3216	1	SA
....4	C1045	2203-006333	C-CER,CHIP;10000nF,20%,16V,X5R,TP,3216	1	SA
....4	C1047	2203-006333	C-CER,CHIP;10000nF,20%,16V,X5R,TP,3216	1	SA
....4	C1048	2203-006333	C-CER,CHIP;10000nF,20%,16V,X5R,TP,3216	1	SA
....4	C1051	2203-006333	C-CER,CHIP;10000nF,20%,16V,X5R,TP,3216	1	SA
....4	C1058	2203-006333	C-CER,CHIP;10000nF,20%,16V,X5R,TP,3216	1	SA
....4	C1060	2203-006333	C-CER,CHIP;10000nF,20%,16V,X5R,TP,3216	1	SA
....4	C1065	2203-006333	C-CER,CHIP;10000nF,20%,16V,X5R,TP,3216	1	SA
....4	C1076	2203-006333	C-CER,CHIP;10000nF,20%,16V,X5R,TP,3216	1	SA
....4	C1080	2203-006333	C-CER,CHIP;10000nF,20%,16V,X5R,TP,3216	1	SA
....4	C1081	2203-006333	C-CER,CHIP;10000nF,20%,16V,X5R,TP,3216	1	SA
....4	C1083	2203-006333	C-CER,CHIP;10000nF,20%,16V,X5R,TP,3216	1	SA
....4	C1085	2203-006333	C-CER,CHIP;10000nF,20%,16V,X5R,TP,3216	1	SA
....4	C1088	2203-006333	C-CER,CHIP;10000nF,20%,16V,X5R,TP,3216	1	SA
....4	C1089	2203-006333	C-CER,CHIP;10000nF,20%,16V,X5R,TP,3216	1	SA
....4	C1090	2203-006333	C-CER,CHIP;10000nF,20%,16V,X5R,TP,3216	1	SA
....4	C1091	2203-006333	C-CER,CHIP;10000nF,20%,16V,X5R,TP,3216	1	SA
....4	C1092	2203-006333	C-CER,CHIP;10000nF,20%,16V,X5R,TP,3216	1	SA
....4	C1096	2203-006333	C-CER,CHIP;10000nF,20%,16V,X5R,TP,3216	1	SA
....4	C1099	2203-006333	C-CER,CHIP;10000nF,20%,16V,X5R,TP,3216	1	SA
....4	C1126	2203-006333	C-CER,CHIP;10000nF,20%,16V,X5R,TP,3216	1	SA

ELECTRONIC SERVICE TIRGOVISTE

Level	Loc. No.	Code No.	Description & Specification	Q'ty	SA/SNA
....4	C1136	2203-006333	C-CER,CHIP;10000nF,20%,16V,X5R,TP,3216	1	SA
....4	C1172	2203-006333	C-CER,CHIP;10000nF,20%,16V,X5R,TP,3216	1	SA
....4	C3017	2203-006333	C-CER,CHIP;10000nF,20%,16V,X5R,TP,3216	1	SA
....4	C4057	2203-006333	C-CER,CHIP;10000nF,20%,16V,X5R,TP,3216	1	SA
....4	C4064	2203-006333	C-CER,CHIP;10000nF,20%,16V,X5R,TP,3216	1	SA
....4	C4072	2203-006333	C-CER,CHIP;10000nF,20%,16V,X5R,TP,3216	1	SA
....4	C4082	2203-006333	C-CER,CHIP;10000nF,20%,16V,X5R,TP,3216	1	SA
....4	C4122	2203-006333	C-CER,CHIP;10000nF,20%,16V,X5R,TP,3216	1	SA
....4	C5083	2203-006333	C-CER,CHIP;10000nF,20%,16V,X5R,TP,3216	1	SA
....4	C5086	2203-006333	C-CER,CHIP;10000nF,20%,16V,X5R,TP,3216	1	SA
....4	C2001	2402-000108	C-AL,SMD;10uF,20%,16V,WT,TP,4.3x4.3x5.2m	1	SA
....4	C5037	2402-000108	C-AL,SMD;10uF,20%,16V,WT,TP,4.3x4.3x5.2m	1	SA
....4	C5041	2402-000108	C-AL,SMD;10uF,20%,16V,WT,TP,4.3x4.3x5.2m	1	SA
....4	C5024	2402-000179	C-AL,SMD;47uF,20%,16V,GP,TP,6.6x6.6x5.7m	1	SA
....4	C4012	2402-001059	C-AL,SMD;220UF,20%,6.3V,-,TP,6X6.6X6.6	1	SA
....4	C4013	2402-001059	C-AL,SMD;220UF,20%,6.3V,-,TP,6X6.6X6.6	1	SA
....4	C1102	2402-001081	C-AL,SMD;100uF,20%,25V,WT,TP,8.3x8.3x10	1	SA
....4	C1125	2402-001083	C-AL,SMD;100uF,20%,50V,GP,TP,10x10.3x10m	1	SA
....4	C5032	2402-001097	C-AL,SMD;0.1UF,20%,50V,WT,TP,4.3X4.3X5.2	1	SA
....4	C5033	2402-001097	C-AL,SMD;0.1UF,20%,50V,WT,TP,4.3X4.3X5.2	1	SA
....4	C1009	2402-001128	C-AL,SMD;100UF,20%,16V,WT,TP,6.3X5.7MM	1	SA
....4	C1010	2402-001128	C-AL,SMD;100UF,20%,16V,WT,TP,6.3X5.7MM	1	SA
....4	C1015	2402-001128	C-AL,SMD;100UF,20%,16V,WT,TP,6.3X5.7MM	1	SA
....4	C1029	2402-001128	C-AL,SMD;100UF,20%,16V,WT,TP,6.3X5.7MM	1	SA
....4	C1036	2402-001128	C-AL,SMD;100UF,20%,16V,WT,TP,6.3X5.7MM	1	SA
....4	C1042	2402-001128	C-AL,SMD;100UF,20%,16V,WT,TP,6.3X5.7MM	1	SA
....4	C1059	2402-001128	C-AL,SMD;100UF,20%,16V,WT,TP,6.3X5.7MM	1	SA
....4	C1112	2402-001128	C-AL,SMD;100UF,20%,16V,WT,TP,6.3X5.7MM	1	SA
....4	C1113	2402-001128	C-AL,SMD;100UF,20%,16V,WT,TP,6.3X5.7MM	1	SA
....4	C1115	2402-001128	C-AL,SMD;100UF,20%,16V,WT,TP,6.3X5.7MM	1	SA
....4	C1123	2402-001128	C-AL,SMD;100UF,20%,16V,WT,TP,6.3X5.7MM	1	SA
....4	C1007	2402-001129	C-AL,SMD;47UF,20%,16V,WT,TP,6.3X5.2MM	1	SA
....4	C1028	2402-001129	C-AL,SMD;47UF,20%,16V,WT,TP,6.3X5.2MM	1	SA
....4	C1064	2402-001129	C-AL,SMD;47UF,20%,16V,WT,TP,6.3X5.2MM	1	SA
....4	C1069	2402-001129	C-AL,SMD;47UF,20%,16V,WT,TP,6.3X5.2MM	1	SA
....4	C1107	2402-001129	C-AL,SMD;47UF,20%,16V,WT,TP,6.3X5.2MM	1	SA
....4	C3036	2402-001129	C-AL,SMD;47UF,20%,16V,WT,TP,6.3X5.2MM	1	SA
....4	C3038	2402-001129	C-AL,SMD;47UF,20%,16V,WT,TP,6.3X5.2MM	1	SA
....4	C4010	2402-001129	C-AL,SMD;47UF,20%,16V,WT,TP,6.3X5.2MM	1	SA
....4	C5042	2402-001129	C-AL,SMD;47UF,20%,16V,WT,TP,6.3X5.2MM	1	SA
....4	C1106	2402-001160	C-AL,SMD;330UF,20%,16V,WT,TP,1008	1	SA
....4	C1077	2402-001178	C-AL,SMD;10uF,20%,16V,WT,TP,4.3x4.3x5.8m	1	SA
....4	C1139	2402-001178	C-AL,SMD;10uF,20%,16V,WT,TP,4.3x4.3x5.8m	1	SA
....4	C2017	2402-001178	C-AL,SMD;10uF,20%,16V,WT,TP,4.3x4.3x5.8m	1	SA
....4	C3004	2402-001178	C-AL,SMD;10uF,20%,16V,WT,TP,4.3x4.3x5.8m	1	SA
....4	C3006	2402-001178	C-AL,SMD;10uF,20%,16V,WT,TP,4.3x4.3x5.8m	1	SA
....4	C3008	2402-001178	C-AL,SMD;10uF,20%,16V,WT,TP,4.3x4.3x5.8m	1	SA
....4	C3011	2402-001178	C-AL,SMD;10uF,20%,16V,WT,TP,4.3x4.3x5.8m	1	SA
....4	C3028	2402-001178	C-AL,SMD;10uF,20%,16V,WT,TP,4.3x4.3x5.8m	1	SA
....4	C3041	2402-001178	C-AL,SMD;10uF,20%,16V,WT,TP,4.3x4.3x5.8m	1	SA
....4	C3043	2402-001178	C-AL,SMD;10uF,20%,16V,WT,TP,4.3x4.3x5.8m	1	SA
....4	C3045	2402-001178	C-AL,SMD;10uF,20%,16V,WT,TP,4.3x4.3x5.8m	1	SA
....4	C3048	2402-001178	C-AL,SMD;10uF,20%,16V,WT,TP,4.3x4.3x5.8m	1	SA
....4	C3050	2402-001178	C-AL,SMD;10uF,20%,16V,WT,TP,4.3x4.3x5.8m	1	SA
....4	C3051	2402-001178	C-AL,SMD;10uF,20%,16V,WT,TP,4.3x4.3x5.8m	1	SA
....4	C1057	2402-001183	C-AL,SMD;22UF,20%,16V,WT,TP,5.3X5.3X6MM	1	SA
....4	C1128	2402-001183	C-AL,SMD;22UF,20%,16V,WT,TP,5.3X5.3X6MM	1	SA
....4	C1167	2402-001183	C-AL,SMD;22UF,20%,16V,WT,TP,5.3X5.3X6MM	1	SA
....4	C1170	2402-001183	C-AL,SMD;22UF,20%,16V,WT,TP,5.3X5.3X6MM	1	SA
....4	C4123	2402-001183	C-AL,SMD;22UF,20%,16V,WT,TP,5.3X5.3X6MM	1	SA

ELECTRONIC SERVICE TIRGOVISTE

Level	Loc. No.	Code No.	Description & Specification	Q'ty	SA/SNA
....4	C5005	2402-001183	C-AL,SMD;22UF,20%,16V,WT,TP,5.3X5.3X6MM	1	SA
....4	C5016	2402-001183	C-AL,SMD;22UF,20%,16V,WT,TP,5.3X5.3X6MM	1	SA
....4	C1127	2402-001221	C-AL,SMD;470UF,20%,16V,-,TP,A8.3XB8.3XL1	1	SA
....4	C1165	2402-001221	C-AL,SMD;470UF,20%,16V,-,TP,A8.3XB8.3XL1	1	SA
....4	C4030	2402-001226	C-AL,SMD;4.7UF,20%,35V,HR,TP,4.3X4.3X5.8	1	SA
....4	C4047	2402-001226	C-AL,SMD;4.7UF,20%,35V,HR,TP,4.3X4.3X5.8	1	SA
....4	C4051	2402-001226	C-AL,SMD;4.7UF,20%,35V,HR,TP,4.3X4.3X5.8	1	SA
....4	C4127	2402-001226	C-AL,SMD;4.7UF,20%,35V,HR,TP,4.3X4.3X5.8	1	SA
....4	C5078	2402-001257	C-AL,SMD;470uF,20%,16V,-,TP,8.3*10	1	SA
....4	C5079	2402-001257	C-AL,SMD;470uF,20%,16V,-,TP,8.3*10	1	SA
....4	C5080	2402-001257	C-AL,SMD;470uF,20%,16V,-,TP,8.3*10	1	SA
....4	C1095	2409-001029	C-ORGANIC;120uF,20%,6.3V,WT,TP,10.3x10.3	1	SA
....4	T0052	2703-000274	INDUCTOR-SMD;2.2uH,10%,2012	1	SA
....4	T0052	2703-000398	INDUCTOR-SMD;10uH,10%,3225	1	SA
....4	T0052	2703-000398	INDUCTOR-SMD;10uH,10%,3225	1	SA
....4	T0052	2703-000398	INDUCTOR-SMD;10uH,10%,3225	1	SA
....4	T0052	2703-000398	INDUCTOR-SMD;10uH,10%,3225	1	SA
....4	T0052	2703-000398	INDUCTOR-SMD;10uH,10%,3225	1	SA
....4	T0052	2703-000398	INDUCTOR-SMD;10uH,10%,3225	1	SA
....4	T0052	2703-000398	INDUCTOR-SMD;10uH,10%,3225	1	SA
....4	T0052	2703-000398	INDUCTOR-SMD;10uH,10%,3225	1	SA
....4	T0052	2703-000398	INDUCTOR-SMD;10uH,10%,3225	1	SA
....4	T0052	2703-000398	INDUCTOR-SMD;10uH,10%,3225	1	SA
....4	T0052	2703-000398	INDUCTOR-SMD;10uH,10%,3225	1	SA
....4	T0052	2703-000398	INDUCTOR-SMD;10uH,10%,3225	1	SA
....4	T0052	2703-000398	INDUCTOR-SMD;10uH,10%,3225	1	SA
....4	T0052	2703-000398	INDUCTOR-SMD;10uH,10%,3225	1	SA
....4	T0052	2703-000398	INDUCTOR-SMD;10uH,10%,3225	1	SA
....4	T0052	2703-001229	INDUCTOR-SMD;2.2uH,10%,1608	1	SA
....4	T0052	2703-001229	INDUCTOR-SMD;2.2uH,10%,1608	1	SA
....4	T0052	2703-001229	INDUCTOR-SMD;2.2uH,10%,1608	1	SA
....4	T0052	2703-001229	INDUCTOR-SMD;2.2uH,10%,1608	1	SA
....4	T0052	2703-001229	INDUCTOR-SMD;2.2uH,10%,1608	1	SA
....4	T0052	2703-001229	INDUCTOR-SMD;2.2uH,10%,1608	1	SA
....4	T0052	2703-001778	INDUCTOR-SMD;3.3uH,20%,3225	1	SA
....4	T0052	2703-002722	INDUCTOR-SMD;22uH,20%,12x12mm	1	SA
....4	T0052	2703-002915	INDUCTOR-SMD;22uH,20%,8080	1	SA
....4	T0052	2703-002915	INDUCTOR-SMD;22uH,20%,8080	1	SA
....4	T0052	2703-002915	INDUCTOR-SMD;22uH,20%,8080	1	SA
....4	T0052	2703-002915	INDUCTOR-SMD;22uH,20%,8080	1	SA
....4	X3002	2801-003326	CRYSTAL-SMD;24MHZ,30PPM,28-ABX,20PF,50OH	1	SA
....4	X3001	2801-003923	CRYSTAL-SMD;10MHz,30ppm,28-AAN,20pF,60oh	1	SA
....4	X1001	2801-003954	CRYSTAL-SMD;27MHz,30ppm,28-AAN,16pF,50oh	1	SA
....4	X4001	2801-004483	CRYSTAL-SMD;28.322MHz,30ppm,HC-49,20pF,5	1	SA
....4	F103	2901-001114	FILTER-EMI SMD;25VDC,2.0ADC,-,100nF,3.2x	1	SA
....4	T0568	3301-000314	BEAD-SMD;120ohm,1.6x0.8x0.8mm,-,-,-	1	SNA
....4	T0568	3301-000314	BEAD-SMD;120ohm,1.6x0.8x0.8mm,-,-,-	1	SNA
....4	T0568	3301-001145	BEAD-SMD;60ohm,4516,TP,70ohm/45MHz,82ohm	1	SNA
....4	T0568	3301-001145	BEAD-SMD;60ohm,4516,TP,70ohm/45MHz,82ohm	1	SNA
....4	T0568	3301-001145	BEAD-SMD;60ohm,4516,TP,70ohm/45MHz,82ohm	1	SNA
....4	T0568	3301-001145	BEAD-SMD;60ohm,4516,TP,70ohm/45MHz,82ohm	1	SNA
....4	T0568	3301-001236	BEAD-SMD;60ohm,1608,-,-,-	1	SNA
....4	T0568	3301-001236	BEAD-SMD;60ohm,1608,-,-,-	1	SNA
....4	T0568	3301-001236	BEAD-SMD;60ohm,1608,-,-,-	1	SNA
....4	T0568	3301-001236	BEAD-SMD;60ohm,1608,-,-,-	1	SNA
....4	T0568	3301-001236	BEAD-SMD;60ohm,1608,-,-,-	1	SNA
....4	T0568	3301-001236	BEAD-SMD;60ohm,1608,-,-,-	1	SNA
....4	T0568	3301-001324	BEAD-SMD;15ohm,2012,600mA,TP,,,0.1ohm	1	SNA
....4	T0568	3301-001324	BEAD-SMD;15ohm,2012,600mA,TP,,,0.1ohm	1	SNA
....4	T0568	3301-001324	BEAD-SMD;15ohm,2012,600mA,TP,,,0.1ohm	1	SNA

ELECTRONIC SERVICE TIRGOVISTE

Level	Loc. No.	Code No.	Description & Specification	Q'ty	SA/SNA
....4	T0568	3301-001324	BEAD-SMD;15ohm,2012,600mA,TP,,,0.1ohm	1	SNA
....4	T0568	3301-001324	BEAD-SMD;15ohm,2012,600mA,TP,,,0.1ohm	1	SNA
....4	T0568	3301-001324	BEAD-SMD;15ohm,2012,600mA,TP,,,0.1ohm	1	SNA
....4	T0568	3301-001324	BEAD-SMD;15ohm,2012,600mA,TP,,,0.1ohm	1	SNA
....4	T0568	3301-001324	BEAD-SMD;15ohm,2012,600mA,TP,,,0.1ohm	1	SNA
....4	T0568	3301-001324	BEAD-SMD;15ohm,2012,600mA,TP,,,0.1ohm	1	SNA
....4	T0568	3301-001324	BEAD-SMD;15ohm,2012,600mA,TP,,,0.1ohm	1	SNA
....4	T0568	3301-001324	BEAD-SMD;15ohm,2012,600mA,TP,,,0.1ohm	1	SNA
....4	T0568	3301-001324	BEAD-SMD;15ohm,2012,600mA,TP,,,0.1ohm	1	SNA
....4	T0568	3301-001324	BEAD-SMD;15ohm,2012,600mA,TP,,,0.1ohm	1	SNA
....4	T0568	3301-001393	BEAD-SMD;60ohm,3216,1500mA,TP,41ohm/40MH	1	SNA
....4	T0568	3301-001404	BEAD-SMD;30ohm,2012,TP,-,-	1	SA
....4	T0568	3301-001404	BEAD-SMD;30ohm,2012,TP,-,-	1	SA
....4	T0568	3301-001404	BEAD-SMD;30ohm,2012,TP,-,-	1	SA
....4	T0568	3301-001404	BEAD-SMD;30ohm,2012,TP,-,-	1	SA
....4	T0568	3301-001404	BEAD-SMD;30ohm,2012,TP,-,-	1	SA
....4	T0568	3301-001404	BEAD-SMD;30ohm,2012,TP,-,-	1	SA
....4	T0568	3301-001569	BEAD-SMD;600ohm,2012,1000mA,TP,520ohm/90	1	SNA
....4	T0568	3301-001569	BEAD-SMD;600ohm,2012,1000mA,TP,520ohm/90	1	SNA
....4	T0568	3301-001569	BEAD-SMD;600ohm,2012,1000mA,TP,520ohm/90	1	SNA
....4	CN2001	3701-001311	CONNECTOR-HDMI;21P,2R,FEMALE,SMD-S,AU30U	1	SA
....4	CN1003	3711-005291	HEADER-BOARD TO CABLE;BOX,2P,1R,2MM,SMD-	1	SA
....4	CN1002	3711-005292	HEADER-BOARD TO CABLE;BOX,3P,1R,2MM,SMD-	1	SA
....4	CN5001	3711-005497	HEADER-BOARD TO CABLE;BOX,15P,1R,1.25MM,	1	SA
....4	L1012	BN27-00007A	COIL CHOKE-SMD;DHB0504-100,RB15/17NS,10u	1	SA
....4	T0077	BN41-00700B	PCB MAIN;CAMBRIDGE,FR-4,4,MP2.0,1.6T,192	1	SNA
....4	M0018	BN97-00805F	ASSY MICOM;T-BRDMPEUD-1011,LE32R73BDX/XE	1	SA
.....5	IC115	1107-001555	IC-FLASH MEMORY;49BV802A,8MBIT,1MX8/512K	1	SNA
....4	M0018	BN97-00805G	ASSY MICOM;T-XXXX-XXXX,LE32R73BDX/XEU24C	1	SA
.....5	IC520	0903-001389	IC-MICROCONTROLLER;S3F866B,8Bit,QFP,44P,	1	SNA
1		BN91-01007U	ASSY SHIELD-AM LCD;LE32R73BD/LE32R74BD,3	1	SNA
..2	M0081	6003-000115	SCREW-TAPTITE;BH,+,B,M3,L6,ZPC(BLK),SWRC	2	SNA
..2	M0081	6003-000115	SCREW-TAPTITE;BH,+,B,M3,L6,ZPC(BLK),SWRC	4	SNA
..2	M0081	6003-000115	SCREW-TAPTITE;BH,+,B,M3,L6,ZPC(BLK),SWRC	6	SNA
..2	M0081	6003-000115	SCREW-TAPTITE;BH,+,B,M3,L6,ZPC(BLK),SWRC	3	SNA
..2	M0081	6003-000115	SCREW-TAPTITE;BH,+,B,M3,L6,ZPC(BLK),SWRC	2	SNA
..2	M0081	6003-000115	SCREW-TAPTITE;BH,+,B,M3,L6,ZPC(BLK),SWRC	1	SNA
..2	M0081	6003-001003	SCREW-TAPTITE;BH,+,B,M4,L12,ZPC(BLK),SWR	2	SNA
..2	M0081	6003-001003	SCREW-TAPTITE;BH,+,B,M4,L12,ZPC(BLK),SWR	1	SNA
..2	M0081	6003-001003	SCREW-TAPTITE;BH,+,B,M4,L12,ZPC(BLK),SWR	8	SNA
..2	M0081	6003-001003	SCREW-TAPTITE;BH,+,B,M4,L12,ZPC(BLK),SWR	1	SNA
..2	M0081	6003-001003	SCREW-TAPTITE;BH,+,B,M4,L12,ZPC(BLK),SWR	2	SNA
..2	M0081	6003-001003	SCREW-TAPTITE;BH,+,B,M4,L12,ZPC(BLK),SWR	1	SNA
..2	T0081	6006-000245	SCREW-MACHINE;WSP,PH,+,M4,L8,ZPC(YEL),SW	4	SNA
..2	T0081	6006-000245	SCREW-MACHINE;WSP,PH,+,M4,L8,ZPC(YEL),SW	1	SNA
..2	T0076	BN39-00615D	CBF HARNESS;BORDEAUX,1617#22,3P,1P,RING,	1	SA
..2		BN61-02196A	BRACKET-PANEL SIDE;Bordeaux 32,SECC,T1.2	1	SNA
..2		BN61-02197A	BRACKET-PANEL SIDE;Bordeaux 32,SECC,T1.2	1	SNA
..2		BN61-02201A	BRACKET-STAND LINK;Bordeaux 32,SECC,T1.6	1	SNA
..2	M0146	BN63-02462A	SHIELD CASE;CAMBRIDGE 32,SECC,T0.8,UK	1	SNA
..2		BN96-03006A	ASSY BOARD P-HOLDER AV;32R71,EO,ABS+PMMA	1	SNA
...3		BN61-02193A	HOLDER-SIDE AV;32R71,EO,KO,SO,ABS+PMMA,H	1	SNA
...3	T0578	BN64-00454A	INLAY AV;BORDEAUX,PS SHEET,T0.3,-,-,-,EO	1	SNA
...3	M0020	BN96-02439A	ASSY BOARD P-SUB AV SIDE;MILANO,CT5000-3	1	SA
...3	M2893	BN39-00672A	LEAD CONNECTOR;LNR329DX/XAA,UL2835#28,UL	1	SA
..2	T0159	BN96-03057A	ASSY PCB P-SMPS;Bordeaux 32 PFC,LE32R71B	1	SA
..2	M2893	BH39-00362G	LEAD CONNECTOR;SONOMA,UL1007#26,5PIN,100	1	SA
..2	M2893	BN39-00603M	LEAD CONNECTOR;LE40R73BDX,UL1007#26,14P,	1	SA
..2	M2893	BN39-00712C	LEAD CONNECTOR-LVDS;Bordeaux,UL1571#30,3	1	SA

ELECTRONICSERVICE SERGOVISTE

Level	Loc. No.	Code No.	Description & Specification	Q'ty	SA/SNA
..2	T0447	BN96-03440A	ASSY BRACKET P-PANEL;32,SECC,BUILT-IN	1	SNA
...3	M0081	6003-000115	SCREW-TAPTITE;BH,+,B,M3,L6,ZPC(BLK),SWRC	2	SNA
...3	M0146	BN61-02194A	BRACKET-PANEL TOP;Bordeaux 32,SECC,T1.2	1	SNA
...3		BN61-02195A	BRACKET-PANEL BOTTOM;Bordeaux 32,SECC,T1	1	SNA
...3		BN61-02198A	BRACKET-GUIDE MAIN;Bordeaux 32,SECC,T1.2	1	SNA
...3		BN61-02199A	BRACKET-GUIDE POWER;Bordeaux 32,SECC,T1.	1	SNA
...3		BN61-02200A	BRACKET-GUIDE POWER;Bordeaux 32,SECC,T1.	1	SNA
...3	T0514	BN61-02393A	BRACKET-SUPPORT;CAMBRIDGE 32,SECC,T1.2	1	SNA
...3	M0131	AA63-01437A	GASKET;Bordeaux,Conductive Fabric,20mm,9	1	SNA
...3	M0131	AA63-01438A	GASKET;Bordeaux,Conductive Fabric,7mm,8m	1	SNA
...3	M0131	AA63-01447A	GASKET;Cambridge,Conductive Fabric,20mm,	1	SNA
..2	M2893	BN39-00691A	LEAD CONNECTOR;Torino-32,UL1007#26,16P,1	1	SA
..2	M0114	BN61-02500A	HOLDER-WIRE;NYLON6.6,NATURAL	2	SNA
..2		BN96-03590A	ASSY SHIELD P-PCB MAIN;CAMBRIDGE32,SECC	1	SNA
...3	T0603	BN63-02458A	SHIELD-PCB MAIN;CAMBRIDGE 32,SECC,T0.5,U	1	SNA
...3	M0131	BN63-02627A	GASKET;Oxford,Conductive Fabric,8,13,30,	1	SNA
1		BN91-01017F	ASSY LCD-SPB;LE32R71B,32",BORDEAUX,AM LC	1	SNA
..2	M0215	BN07-00247A	LCD-PANEL;LTA320WT-L14,-,8BIT,760*450*50	1	SA
1	M0045	BN92-01661H	ASSY ACCESSORY;LE32R73BDX/XEU,CAMBRIDGE	1	SNA
..2	M0045	BN96-02984H	ASSY ACCESSORY;LE32R73BDX/XEU,CAMBRIDGE	1	SA
...3	T0524	6902-000110	BAG PE;LDPE,T0.05,W250,L400,TRP,28,2	2	SNA
...3	ACCESSORY	AA68-03575A	MANUAL FLYER-01,REGISTRATION C;XEU,ENG,U	1	SNA
...3	ACCESSORY	AA68-20051A	MANUAL FLYER-S/NETWORK;ALL,W/P 100(G),B5	1	SNA
...3	T0074	BN59-00516A	REMOCON;CAMBRIDGE,TM87B,45,CAMBRIDGE,EUR	1	SA
...3	ACCESSORY	BN63-01798A	CLOTH-CLEAN;RE40**,CLOTH,310,320,RHCM	1	SNA
...3	T0531	BN63-02323A	COVER-BOTTOM;23,26,32R71,ABS+PMMA,HB,BK2	1	SNA
...3	T0076	BN68-00514B	MANUAL FLYER-02,WARRANTY CARD;PDP/LCD TV	1	SNA
...3	T0059	BN68-00895A	MANUAL FLYER-CARD;COMM,SAMSUNG,W/P 5G,PR	1	SNA
...3	T0059	BN68-00907A	MANUAL FLYER-CARD;COMM,SAMSUNG,18 LANG,E	1	SNA
...3	T0511	BN68-01007A	MANUAL USERS;COMM,SAMSUNG,English,UK,W/P	1	SNA
...3	ACCESSORY	BN69-01086A	BOX ACCESSORY-00;COMM,SW1,YEL,-,W573,D63	1	SNA
...3	M0045	BN96-01800A	ASSY ACCESSORY;ROME32,SCREW	1	SA
....4	T0081	6002-001294	SCREW-TAPPING;BH,+,,M4,L16,ZPC(BLK)	4	SA
....4	ACCESSORY	6902-000128	BAG ZIPPER;LDPE,T0.05,W200,L150,TRP,8,2-	1	SNA
..2	T0268	3903-000193	CBF-POWER CORD;DT,GB,GP3/YES,U(IEC C13-R	1	SA
1	M0003	BN92-01663C	ASSY BOX;32R73,EO,(XEU),CAMBRIDGE	1	SNA
..2		BN69-01260E	BOX-01,SET;32R73,DY-01,AB,YEL,A1,IDTV(U.	1.02	SNA
1	M0113	BN92-01664A	ASSY P/MATERIAL;32R71,BORDEAUX	1	SNA
..2	T0376	6902-000061	BAG AIR;LDPE,T0.2,L1000,W500,TRP,,,	0.035	SNA
..2	T0376	6902-000379	BAG AIR;LDPE,T0.2,W1000,L1800,TRP,-,--	0.006	SNA
..2	T0081	6902-000604	BAG WRAPPING;LDPE,T0.02,W500,L10000,TRP,	6.45	SNA
..2	T0524	6902-000715	BAG PE;HDPE/NITRON,T0.015/T0.5,W1000,L10	1	SNA
1	M0019	BN92-01801P	ASSY LABEL;LE40R73BD,LE32R73BD.LE37R73BD	1	SNA

ELECTRONIC SERVICE TIPGOVISTE

6-3 LE40R73BDX/XEE Parts List

Level	Loc. No.	Code No.	Description & Specification	Q'ty	SA/SNA
0		LE40R73BDX/XEE	LE40R73BD,R62D/40R70-GSH,40,LCD-TV,SWEDE	0	
1	M0001	BN90-00843C	ASSY COVER FRONT;40R73,EO,CAMBRIDGE	1	SNA
..2	T0175	BN96-03002A	ASSY SPEAKER P;8ohm,Bordeuax 32"/37"/40"	1	SA
..2	T0175	BN96-03003A	ASSY SPEAKER P;8ohm,Bordeuax 32"/37"/40"	1	SA
..2	T0003	BN96-03011E	ASSY COVER P-FRONT;40R73,EO,ABS+PMMA,HB,	1	SA
...3	M0081	6003-001003	SCREW-TAPTITE;BH,+,B,M4,L12,ZPC(BLK),SWR	2	SNA
...3	M0081	6003-001003	SCREW-TAPTITE;BH,+,B,M4,L12,ZPC(BLK),SWR	2	SNA
...3	T0060	BN61-01655A	SPRING ETC;STS-304 SUS,D8,L12,T0.5	1	SA
...3		BN63-02183G	COVER-SHEET;Rhcm,PE Vinyl,T0.05,1100mm,2	1.983	SNA
...3	M0112	BN63-02361E	COVER-FRONT;40R73,EO,ABS+PMMA,HB,BK23,S/	1	SNA
...3	T0056	BN63-02363A	COVER-DECORATION;40R71,HIPS,HB,GR503,BLM	1	SNA
...3	T0023	BN64-00342A	KNOB POWER;ROME,40,PC,VIOLET	1	SNA
...3	T0059	BN64-00366A	INDICATOR LED;ROME-I,PC,CLEAR,ALL MODEL	1	SNA
...3	T0054	BN64-00443A	KNOB-DECORATION;32R71,ABS,HB,GR503,VACUU	1	SNA
...3	T0061	BN64-00453A	WINDOW-REMOCON;32R71,PC,V0,VIOLET,DIFFUS	1	SNA
...3		BN96-03404A	ASSY BOARD P-FUNCTION&KNOB;Bordeaux,CT50	1	SNA
....4	T0022	BN64-00442A	KNOB CONTROL;26,32,40R71,PC,BLK,ACRYL CL	1	SNA
....4	M0145	BN96-03045A	ASSY BOARD P-FUNCTION;BORDEAUX,FUNCTION	1	SA
...3	M0146	BN96-03405A	ASSY BOARD P-POWER;BORDEAUX1,CT5000-4140	1	SA
...3	T0069	AA60-00091P	SPACER-FELT;,FELT,500X10,BLK,T0.5	2	SNA
...3	T0069	AA60-00171L	SPACER-FELT;46L3,FELT,460,T0.5,10	2	SNA
1	M0216	BN90-00847A	ASSY STAND;40R71,BORDEAUX	1	SNA
..2	T0081	6002-001294	SCREW-TAPPING;BH,+,,M4,L16,ZPC(BLK)	4	SA
..2	M0013	BN96-03016A	ASSY STAND P-BASE;40R71,ABS+PMMA,HB,BK23	1	SA
...3	T0081	6002-001294	SCREW-TAPPING;BH,+,,M4,L16,ZPC(BLK)	4	SA
...3	M0081	6003-001239	SCREW-TAPTITE;FH,+,B,M4,L10,ZPC(YEL),SWR	4	SA
...3		BN61-02246A	GUIDE-STAND;40R71,ABS,V0,BLK	1	SNA
...3		BN61-02247A	HOLDER-SWIVEL RING;40R71,ACETAL,BLK	1	SNA
...3		BN61-02248A	HOLDER-SWIVEL RING;40R71,ACETAL NATUAL,T	1	SNA
...3		BN61-02249A	HOLDER-SWIVEL RING;40R71,ACETAL NATUAL,B	1	SNA
...3		BN61-02259A	BRACKET-STAND BOTTOM;BORDEAUX 40,SGHC,T3	1	SNA
...3		BN61-02260A	BRACKET-HINGE SWIVEL;BORDEAUX 40,SGHC,T3	1	SNA
...3	T0004	BN63-02364A	COVER-STAND BASE;40R71,ABS+PMMA,HB,BK23,	1	SNA
...3		BN63-02365A	COVER-STAND SUB;40R71,ABS+PMMA,HB,BK23,H	1	SNA
...3	T0132	BN73-00052A	RUBBER FOOT;ARES 17,SILICON,DIA 17 * T1.	4	SNA
...3		BN63-02183E	COVER-SHEET;Rhcm,PE Vinyl,T0.05,750mm,20	0.5	SNA
...3	T0514	BN61-02368A	BRACKET-SUPPORT;BORDEAUX 40,SECC,T1.2	2	SNA
1	M0002	BN90-00872A	ASSY COVER REAR;40R73,EO,CAMBRIDGE	1	SNA
..2	T0081	6002-001294	SCREW-TAPPING;BH,+,,M4,L16,ZPC(BLK)	1	SA
..2	T0081	6002-001294	SCREW-TAPPING;BH,+,,M4,L16,ZPC(BLK)	2	SA
..2	T0081	6002-001294	SCREW-TAPPING;BH,+,,M4,L16,ZPC(BLK)	14	SA
..2	M0013	BN96-03243A	ASSY COVER P-REAR;40R73,EO,ABS+PMMA,HB,B	1	SA
...3	T0101	BN61-02032A	BRACKET-WALL;32,MGM,SECC,T1.6	1	SNA
...3	M0006	BN63-02457A	COVER-REAR;40R73,EO,ABS+PMMA,HB,BK23,H/G	1	SNA
...3	T0071	BN64-00444F	INLAY-TERMINAL;CAMBRIDGE32,37,40,PS SHEE	1	SNA
...3		BN63-02183G	COVER-SHEET;Rhcm,PE Vinyl,T0.05,1100mm,2	1	SNA
...3	T0064	BN65-00002A	CLAMPER CORE;BORDEAUX,PP,V0,BLK	1	SNA
1	M0017	BN91-01006E	ASSY CHASSIS;LE32R73BDX/XEE	1	SNA
..2	T0422	BN94-00868A	ASSY PCB MISC-DTV MODULE;DTV MODULE,XEE	1	SNA
...3	T0245	0202-001522	SOLDER-WIRE FLUX;LFA3-107,-,D1.2,96.5Sn/	0.003	SNA
...3	CN902	3703-001124	CONNECTOR-BACK PANEL;32P,2R,MALE,ANGLE,A	1	SA
...3	CN902	3703-001124	CONNECTOR-BACK PANEL;32P,2R,MALE,ANGLE,A	1	SA
...3	DJ301	3709-001346	CONNECTOR-CARD SLOT;68P,0.27mm,ANGLE,AU1	1	SA
...3	DJ402	3722-001055	JACK-PHONE;5P/2C,AG,BLK,ANGLE	1	SA
...3	T0510	BN97-00842A	ASSY SMD-MAIN;DTV MODULE,XEE	1	SNA
....4	CIS05	0202-001477	SOLDER-CREAM;LST309-M,-,D20~45§-,96.5Sn/	0.465	SNA

ELECTRONIC SERVICE TIRGOVISTE

Level	Loc. No.	Code No.	Description & Specification	Q'ty	SA/SNA
....4	DQ701	0501-000434	TR-SMALL SIGNAL;KTC3875S-GR,NPN,150mW,SO	1	SA
....4	DQ401	0501-000669	TR-SMALL SIGNAL;KTA1505Y,PNP,150mW,SOT-2	1	SA
....4	DQ402	0501-000669	TR-SMALL SIGNAL;KTA1505Y,PNP,150mW,SOT-2	1	SA
....4	DQ703	0501-000669	TR-SMALL SIGNAL;KTA1505Y,PNP,150mW,SOT-2	1	SA
....4	DQ704	0501-000669	TR-SMALL SIGNAL;KTA1505Y,PNP,150mW,SOT-2	1	SA
....4	IC104	0801-002095	IC-CMOS LOGIC;74LCX245,TRANSCEIVER,TSSOP	1	SA
....4	IC104	0801-002237	IC-CMOS LOGIC;74V(A)HC1G04,INVERTER,SC70	1	SA
....4	IC104	0801-002394	IC-CMOS LOGIC;74LCX32,OR GATE,SOIC,14P,1	1	SA
....4	IC104	0801-002407	IC-CMOS LOGIC;74LCX08,AND GATE,SOIC,14P,	1	SA
....4	IC104	0801-002683	IC-CMOS LOGIC;74HCT245,TRANSCEIVER,TSSOP	1	SA
....4	IC104	0801-002709	IC-CMOS LOGIC;74HC373,D FLIP-FLOP,TSSOP,	1	SA
....4	IC104	0801-002709	IC-CMOS LOGIC;74HC373,D FLIP-FLOP,TSSOP,	1	SA
....4	IC107	1002-001227	IC-D/A CONVERTER;CS4340-KSR,24BIT,SOP,16	1	SA
....4	DU402	1006-001165	IC-LINE TRANSCEIVER;MAX3243CDBR,SSOP,28P	1	SA
....4	IC113	1105-001305	IC-DRAM;4S641632,-,64MBIT,1MX16X4BIT,TSO	1	SA
....4	IC113	1105-001308	IC-DRAM;K4S281632,128Mbit,8Mx16,TSOP,54P	1	SA
....4	DU701	1203-001824	IC-VOL. DETECTOR;7042,SOT-89,3P,-,PLASTI	1	SA
....4	T0087	1203-002842	IC-POSI.FIXED REG.;AP1117D-33A,TO-252,3P	1	SA
....4	DU101	1204-002400	IC-DECODER;STI5517SUA,PBGA,416P,27x27mm,	1	SA
....4	DR155	2007-000052	R-CHIP;10Kohm,1%,1/10W,TP,1608	1	SA
....4	DR156	2007-000052	R-CHIP;10Kohm,1%,1/10W,TP,1608	1	SA
....4	DR140	2007-000070	R-CHIP;0ohm,5%,1/10W,TP,1608	1	SA
....4	DR154	2007-000070	R-CHIP;0ohm,5%,1/10W,TP,1608	1	SA
....4	DR158	2007-000070	R-CHIP;0ohm,5%,1/10W,TP,1608	1	SA
....4	DR159	2007-000070	R-CHIP;0ohm,5%,1/10W,TP,1608	1	SA
....4	DR811	2007-000070	R-CHIP;0ohm,5%,1/10W,TP,1608	1	SA
....4	DR812	2007-000070	R-CHIP;0ohm,5%,1/10W,TP,1608	1	SA
....4	DR907	2007-000070	R-CHIP;0ohm,5%,1/10W,TP,1608	1	SA
....4	OR112	2007-000070	R-CHIP;0ohm,5%,1/10W,TP,1608	1	SA
....4	OR113	2007-000070	R-CHIP;0ohm,5%,1/10W,TP,1608	1	SA
....4	DR1102	2007-000072	R-CHIP;47ohm,5%,1/10W,TP,1608	1	SA
....4	DR111	2007-000072	R-CHIP;47ohm,5%,1/10W,TP,1608	1	SA
....4	DR116	2007-000072	R-CHIP;47ohm,5%,1/10W,TP,1608	1	SA
....4	DR169	2007-000072	R-CHIP;47ohm,5%,1/10W,TP,1608	1	SA
....4	DR170	2007-000072	R-CHIP;47ohm,5%,1/10W,TP,1608	1	SA
....4	DR174	2007-000072	R-CHIP;47ohm,5%,1/10W,TP,1608	1	SA
....4	DR176	2007-000072	R-CHIP;47ohm,5%,1/10W,TP,1608	1	SA
....4	DR182	2007-000072	R-CHIP;47ohm,5%,1/10W,TP,1608	1	SA
....4	DR183	2007-000072	R-CHIP;47ohm,5%,1/10W,TP,1608	1	SA
....4	DR184	2007-000072	R-CHIP;47ohm,5%,1/10W,TP,1608	1	SA
....4	DR185	2007-000072	R-CHIP;47ohm,5%,1/10W,TP,1608	1	SA
....4	DR186	2007-000072	R-CHIP;47ohm,5%,1/10W,TP,1608	1	SA
....4	DR187	2007-000072	R-CHIP;47ohm,5%,1/10W,TP,1608	1	SA
....4	DR195	2007-000072	R-CHIP;47ohm,5%,1/10W,TP,1608	1	SA
....4	DR196	2007-000072	R-CHIP;47ohm,5%,1/10W,TP,1608	1	SA
....4	DR197	2007-000072	R-CHIP;47ohm,5%,1/10W,TP,1608	1	SA
....4	DR198	2007-000072	R-CHIP;47ohm,5%,1/10W,TP,1608	1	SA
....4	DR199	2007-000072	R-CHIP;47ohm,5%,1/10W,TP,1608	1	SA
....4	DR202	2007-000072	R-CHIP;47ohm,5%,1/10W,TP,1608	1	SA
....4	DR203	2007-000072	R-CHIP;47ohm,5%,1/10W,TP,1608	1	SA
....4	DR204	2007-000072	R-CHIP;47ohm,5%,1/10W,TP,1608	1	SA
....4	DR501	2007-000072	R-CHIP;47ohm,5%,1/10W,TP,1608	1	SA
....4	DR902	2007-000072	R-CHIP;47ohm,5%,1/10W,TP,1608	1	SA
....4	DR905	2007-000072	R-CHIP;47ohm,5%,1/10W,TP,1608	1	SA
....4	DR906	2007-000072	R-CHIP;47ohm,5%,1/10W,TP,1608	1	SA
....4	DR916	2007-000072	R-CHIP;47ohm,5%,1/10W,TP,1608	1	SA
....4	DR917	2007-000072	R-CHIP;47ohm,5%,1/10W,TP,1608	1	SA
....4	DR923	2007-000072	R-CHIP;47ohm,5%,1/10W,TP,1608	1	SA
....4	DR104	2007-000074	R-CHIP;100ohm,5%,1/10W,TP,1608	1	SA
....4	DR105	2007-000074	R-CHIP;100ohm,5%,1/10W,TP,1608	1	SA

ELECTRONIC SERVICE TIRGOVISTE

Level	Loc. No.	Code No.	Description & Specification	Q'ty	SA/SNA
....4	DR1101	2007-000074	R-CHIP;100ohm,5%,1/10W,TP,1608	1	SA
....4	DR112	2007-000074	R-CHIP;100ohm,5%,1/10W,TP,1608	1	SA
....4	DR113	2007-000074	R-CHIP;100ohm,5%,1/10W,TP,1608	1	SA
....4	DR118	2007-000074	R-CHIP;100ohm,5%,1/10W,TP,1608	1	SA
....4	DR119	2007-000074	R-CHIP;100ohm,5%,1/10W,TP,1608	1	SA
....4	DR120	2007-000074	R-CHIP;100ohm,5%,1/10W,TP,1608	1	SA
....4	DR121	2007-000074	R-CHIP;100ohm,5%,1/10W,TP,1608	1	SA
....4	DR122	2007-000074	R-CHIP;100ohm,5%,1/10W,TP,1608	1	SA
....4	DR123	2007-000074	R-CHIP;100ohm,5%,1/10W,TP,1608	1	SA
....4	DR124	2007-000074	R-CHIP;100ohm,5%,1/10W,TP,1608	1	SA
....4	DR125	2007-000074	R-CHIP;100ohm,5%,1/10W,TP,1608	1	SA
....4	DR126	2007-000074	R-CHIP;100ohm,5%,1/10W,TP,1608	1	SA
....4	DR127	2007-000074	R-CHIP;100ohm,5%,1/10W,TP,1608	1	SA
....4	DR128	2007-000074	R-CHIP;100ohm,5%,1/10W,TP,1608	1	SA
....4	DR129	2007-000074	R-CHIP;100ohm,5%,1/10W,TP,1608	1	SA
....4	DR130	2007-000074	R-CHIP;100ohm,5%,1/10W,TP,1608	1	SA
....4	DR131	2007-000074	R-CHIP;100ohm,5%,1/10W,TP,1608	1	SA
....4	DR137	2007-000074	R-CHIP;100ohm,5%,1/10W,TP,1608	1	SA
....4	DR138	2007-000074	R-CHIP;100ohm,5%,1/10W,TP,1608	1	SA
....4	DR145	2007-000074	R-CHIP;100ohm,5%,1/10W,TP,1608	1	SA
....4	DR146	2007-000074	R-CHIP;100ohm,5%,1/10W,TP,1608	1	SA
....4	DR147	2007-000074	R-CHIP;100ohm,5%,1/10W,TP,1608	1	SA
....4	DR148	2007-000074	R-CHIP;100ohm,5%,1/10W,TP,1608	1	SA
....4	DR149	2007-000074	R-CHIP;100ohm,5%,1/10W,TP,1608	1	SA
....4	DR150	2007-000074	R-CHIP;100ohm,5%,1/10W,TP,1608	1	SA
....4	DR151	2007-000074	R-CHIP;100ohm,5%,1/10W,TP,1608	1	SA
....4	DR152	2007-000074	R-CHIP;100ohm,5%,1/10W,TP,1608	1	SA
....4	DR160	2007-000074	R-CHIP;100ohm,5%,1/10W,TP,1608	1	SA
....4	DR161	2007-000074	R-CHIP;100ohm,5%,1/10W,TP,1608	1	SA
....4	DR166	2007-000074	R-CHIP;100ohm,5%,1/10W,TP,1608	1	SA
....4	DR171	2007-000074	R-CHIP;100ohm,5%,1/10W,TP,1608	1	SA
....4	DR172	2007-000074	R-CHIP;100ohm,5%,1/10W,TP,1608	1	SA
....4	DR175	2007-000074	R-CHIP;100ohm,5%,1/10W,TP,1608	1	SA
....4	DR180	2007-000074	R-CHIP;100ohm,5%,1/10W,TP,1608	1	SA
....4	DR181	2007-000074	R-CHIP;100ohm,5%,1/10W,TP,1608	1	SA
....4	DR200	2007-000074	R-CHIP;100ohm,5%,1/10W,TP,1608	1	SA
....4	DR201	2007-000074	R-CHIP;100ohm,5%,1/10W,TP,1608	1	SA
....4	DR221	2007-000074	R-CHIP;100ohm,5%,1/10W,TP,1608	1	SA
....4	DR400	2007-000074	R-CHIP;100ohm,5%,1/10W,TP,1608	1	SA
....4	DR401	2007-000074	R-CHIP;100ohm,5%,1/10W,TP,1608	1	SA
....4	DR402	2007-000074	R-CHIP;100ohm,5%,1/10W,TP,1608	1	SA
....4	DR403	2007-000074	R-CHIP;100ohm,5%,1/10W,TP,1608	1	SA
....4	DR404	2007-000074	R-CHIP;100ohm,5%,1/10W,TP,1608	1	SA
....4	DR405	2007-000074	R-CHIP;100ohm,5%,1/10W,TP,1608	1	SA
....4	DR406	2007-000074	R-CHIP;100ohm,5%,1/10W,TP,1608	1	SA
....4	DR407	2007-000074	R-CHIP;100ohm,5%,1/10W,TP,1608	1	SA
....4	DR419	2007-000074	R-CHIP;100ohm,5%,1/10W,TP,1608	1	SA
....4	DR704	2007-000074	R-CHIP;100ohm,5%,1/10W,TP,1608	1	SA
....4	DR162	2007-000076	R-CHIP;330ohm,5%,1/10W,TP,1608	1	SA
....4	DR163	2007-000076	R-CHIP;330ohm,5%,1/10W,TP,1608	1	SA
....4	DR164	2007-000076	R-CHIP;330ohm,5%,1/10W,TP,1608	1	SA
....4	DR165	2007-000076	R-CHIP;330ohm,5%,1/10W,TP,1608	1	SA
....4	DR502	2007-000078	R-CHIP;1Kohm,5%,1/10W,TP,1608	1	SA
....4	DR503	2007-000078	R-CHIP;1Kohm,5%,1/10W,TP,1608	1	SA
....4	DR505	2007-000078	R-CHIP;1Kohm,5%,1/10W,TP,1608	1	SA
....4	DR702	2007-000078	R-CHIP;1Kohm,5%,1/10W,TP,1608	1	SA
....4	DR114	2007-000084	R-CHIP;4.7Kohm,5%,1/10W,TP,1608	1	SA
....4	DR139	2007-000084	R-CHIP;4.7Kohm,5%,1/10W,TP,1608	1	SA
....4	DR141	2007-000084	R-CHIP;4.7Kohm,5%,1/10W,TP,1608	1	SA
....4	DR142	2007-000084	R-CHIP;4.7Kohm,5%,1/10W,TP,1608	1	SA

ELECTRONIC SERVICE TARGOVISTE

Level	Loc. No.	Code No.	Description & Specification	Q'ty	SA/SNA
....4	DR143	2007-000084	R-CHIP;4.7Kohm,5%,1/10W,TP,1608	1	SA
....4	DR144	2007-000084	R-CHIP;4.7Kohm,5%,1/10W,TP,1608	1	SA
....4	DR153	2007-000084	R-CHIP;4.7Kohm,5%,1/10W,TP,1608	1	SA
....4	DR417	2007-000084	R-CHIP;4.7Kohm,5%,1/10W,TP,1608	1	SA
....4	DR418	2007-000084	R-CHIP;4.7Kohm,5%,1/10W,TP,1608	1	SA
....4	DR701	2007-000084	R-CHIP;4.7Kohm,5%,1/10W,TP,1608	1	SA
....4	DR703	2007-000084	R-CHIP;4.7Kohm,5%,1/10W,TP,1608	1	SA
....4	DR705	2007-000084	R-CHIP;4.7Kohm,5%,1/10W,TP,1608	1	SA
....4	DR707	2007-000084	R-CHIP;4.7Kohm,5%,1/10W,TP,1608	1	SA
....4	DR117	2007-000090	R-CHIP;10Kohm,5%,1/10W,TP,1608	1	SA
....4	DR177	2007-000090	R-CHIP;10Kohm,5%,1/10W,TP,1608	1	SA
....4	DR178	2007-000090	R-CHIP;10Kohm,5%,1/10W,TP,1608	1	SA
....4	DR179	2007-000090	R-CHIP;10Kohm,5%,1/10W,TP,1608	1	SA
....4	DR188	2007-000090	R-CHIP;10Kohm,5%,1/10W,TP,1608	1	SA
....4	DR189	2007-000090	R-CHIP;10Kohm,5%,1/10W,TP,1608	1	SA
....4	DR190	2007-000090	R-CHIP;10Kohm,5%,1/10W,TP,1608	1	SA
....4	DR191	2007-000090	R-CHIP;10Kohm,5%,1/10W,TP,1608	1	SA
....4	DR192	2007-000090	R-CHIP;10Kohm,5%,1/10W,TP,1608	1	SA
....4	DR193	2007-000090	R-CHIP;10Kohm,5%,1/10W,TP,1608	1	SA
....4	DR194	2007-000090	R-CHIP;10Kohm,5%,1/10W,TP,1608	1	SA
....4	DR416	2007-000090	R-CHIP;10Kohm,5%,1/10W,TP,1608	1	SA
....4	DR423	2007-000090	R-CHIP;10Kohm,5%,1/10W,TP,1608	1	SA
....4	DR424	2007-000090	R-CHIP;10Kohm,5%,1/10W,TP,1608	1	SA
....4	DR632	2007-000090	R-CHIP;10Kohm,5%,1/10W,TP,1608	1	SA
....4	DR633	2007-000090	R-CHIP;10Kohm,5%,1/10W,TP,1608	1	SA
....4	DR901	2007-000090	R-CHIP;10Kohm,5%,1/10W,TP,1608	1	SA
....4	DR903	2007-000090	R-CHIP;10Kohm,5%,1/10W,TP,1608	1	SA
....4	DR904	2007-000090	R-CHIP;10Kohm,5%,1/10W,TP,1608	1	SA
....4	DR918	2007-000090	R-CHIP;10Kohm,5%,1/10W,TP,1608	1	SA
....4	DR919	2007-000090	R-CHIP;10Kohm,5%,1/10W,TP,1608	1	SA
....4	DR920	2007-000090	R-CHIP;10Kohm,5%,1/10W,TP,1608	1	SA
....4	DR921	2007-000090	R-CHIP;10Kohm,5%,1/10W,TP,1608	1	SA
....4	DR922	2007-000090	R-CHIP;10Kohm,5%,1/10W,TP,1608	1	SA
....4	DR700	2007-000097	R-CHIP;47Kohm,5%,1/10W,TP,1608	1	SA
....4	DR706	2007-000097	R-CHIP;47Kohm,5%,1/10W,TP,1608	1	SA
....4	DR102	2007-000102	R-CHIP;100Kohm,5%,1/10W,TP,1608	1	SA
....4	DR408	2007-000113	R-CHIP;33ohm,5%,1/10W,TP,1608	1	SA
....4	DR409	2007-000113	R-CHIP;33ohm,5%,1/10W,TP,1608	1	SA
....4	DR410	2007-000113	R-CHIP;33ohm,5%,1/10W,TP,1608	1	SA
....4	DR411	2007-000113	R-CHIP;33ohm,5%,1/10W,TP,1608	1	SA
....4	DR412	2007-000113	R-CHIP;33ohm,5%,1/10W,TP,1608	1	SA
....4	DR413	2007-000113	R-CHIP;33ohm,5%,1/10W,TP,1608	1	SA
....4	DR414	2007-000113	R-CHIP;33ohm,5%,1/10W,TP,1608	1	SA
....4	DR415	2007-000113	R-CHIP;33ohm,5%,1/10W,TP,1608	1	SA
....4	DR601	2007-000113	R-CHIP;33ohm,5%,1/10W,TP,1608	1	SA
....4	DR908	2007-000113	R-CHIP;33ohm,5%,1/10W,TP,1608	1	SA
....4	DR909	2007-000113	R-CHIP;33ohm,5%,1/10W,TP,1608	1	SA
....4	DR910	2007-000113	R-CHIP;33ohm,5%,1/10W,TP,1608	1	SA
....4	DR911	2007-000113	R-CHIP;33ohm,5%,1/10W,TP,1608	1	SA
....4	DR912	2007-000113	R-CHIP;33ohm,5%,1/10W,TP,1608	1	SA
....4	DR913	2007-000113	R-CHIP;33ohm,5%,1/10W,TP,1608	1	SA
....4	DR914	2007-000113	R-CHIP;33ohm,5%,1/10W,TP,1608	1	SA
....4	DR915	2007-000113	R-CHIP;33ohm,5%,1/10W,TP,1608	1	SA
....4	DR999	2007-000113	R-CHIP;33ohm,5%,1/10W,TP,1608	1	SA
....4	DR101	2007-000119	R-CHIP;560ohm,5%,1/10W,TP,1608	1	SA
....4	DR173	2007-000372	R-CHIP;130ohm,5%,1/10W,TP,1608	1	SA
....4	DR205	2007-000372	R-CHIP;130ohm,5%,1/10W,TP,1608	1	SA
....4	DR132	2007-000539	R-CHIP;200ohm,5%,1/10W,TP,1608	1	SA
....4	DR133	2007-000539	R-CHIP;200ohm,5%,1/10W,TP,1608	1	SA
....4	DR134	2007-000539	R-CHIP;200ohm,5%,1/10W,TP,1608	1	SA

ELECTRONIC SERVICE TIRGOVISTE

Level	Loc. No.	Code No.	Description & Specification	Q'ty	SA/SNA
....4	DR135	2007-000539	R-CHIP;200ohm,5%,1/10W,TP,1608	1	SA
....4	DR167	2007-000539	R-CHIP;200ohm,5%,1/10W,TP,1608	1	SA
....4	DR800	2007-000763	R-CHIP;330ohm,1%,1/10W,TP,1608	1	SA
....4	DR801	2007-000763	R-CHIP;330ohm,1%,1/10W,TP,1608	1	SA
....4	DR802	2007-000763	R-CHIP;330ohm,1%,1/10W,TP,1608	1	SA
....4	DR803	2007-000763	R-CHIP;330ohm,1%,1/10W,TP,1608	1	SA
....4	DR804	2007-000763	R-CHIP;330ohm,1%,1/10W,TP,1608	1	SA
....4	DR805	2007-000763	R-CHIP;330ohm,1%,1/10W,TP,1608	1	SA
....4	DR806	2007-000763	R-CHIP;330ohm,1%,1/10W,TP,1608	1	SA
....4	DR807	2007-000763	R-CHIP;330ohm,1%,1/10W,TP,1608	1	SA
....4	DR420	2007-001167	R-CHIP;75ohm,5%,1/10W,TP,1608	1	SA
....4	DR421	2007-001167	R-CHIP;75ohm,5%,1/10W,TP,1608	1	SA
....4	DRA103	2011-001011	R-NET;10Kohm,5%,1/16W,L,CHIP,8P,TP,3.2x1	1	SA
....4	DRA401	2011-001011	R-NET;10Kohm,5%,1/16W,L,CHIP,8P,TP,3.2x1	1	SA
....4	DRA108	2011-001410	R-NET;120OHM,5%,1/16W,L,CHIP,8P,TP,3.2X1	1	SA
....4	DRA109	2011-001410	R-NET;120OHM,5%,1/16W,L,CHIP,8P,TP,3.2X1	1	SA
....4	DRA110	2011-001410	R-NET;120OHM,5%,1/16W,L,CHIP,8P,TP,3.2X1	1	SA
....4	DRA111	2011-001410	R-NET;120OHM,5%,1/16W,L,CHIP,8P,TP,3.2X1	1	SA
....4	DRA112	2011-001410	R-NET;120OHM,5%,1/16W,L,CHIP,8P,TP,3.2X1	1	SA
....4	DRA113	2011-001410	R-NET;120OHM,5%,1/16W,L,CHIP,8P,TP,3.2X1	1	SA
....4	DRA114	2011-001410	R-NET;120OHM,5%,1/16W,L,CHIP,8P,TP,3.2X1	1	SA
....4	DRA115	2011-001410	R-NET;120OHM,5%,1/16W,L,CHIP,8P,TP,3.2X1	1	SA
....4	DRA116	2011-001410	R-NET;120OHM,5%,1/16W,L,CHIP,8P,TP,3.2X1	1	SA
....4	DRA117	2011-001410	R-NET;120OHM,5%,1/16W,L,CHIP,8P,TP,3.2X1	1	SA
....4	DRA118	2011-001410	R-NET;120OHM,5%,1/16W,L,CHIP,8P,TP,3.2X1	1	SA
....4	DRA119	2011-001410	R-NET;120OHM,5%,1/16W,L,CHIP,8P,TP,3.2X1	1	SA
....4	DRA120	2011-001410	R-NET;120OHM,5%,1/16W,L,CHIP,8P,TP,3.2X1	1	SA
....4	DRA121	2011-001410	R-NET;120OHM,5%,1/16W,L,CHIP,8P,TP,3.2X1	1	SA
....4	DRA122	2011-001410	R-NET;120OHM,5%,1/16W,L,CHIP,8P,TP,3.2X1	1	SA
....4	DRA123	2011-001410	R-NET;120OHM,5%,1/16W,L,CHIP,8P,TP,3.2X1	1	SA
....4	DRA124	2011-001410	R-NET;120OHM,5%,1/16W,L,CHIP,8P,TP,3.2X1	1	SA
....4	DRA125	2011-001410	R-NET;120OHM,5%,1/16W,L,CHIP,8P,TP,3.2X1	1	SA
....4	DC100	2203-000257	C-CER,CHIP;10nF,10%,50V,X7R,1608	1	SA
....4	DC102	2203-000257	C-CER,CHIP;10nF,10%,50V,X7R,1608	1	SA
....4	DC105	2203-000257	C-CER,CHIP;10nF,10%,50V,X7R,1608	1	SA
....4	DC107	2203-000257	C-CER,CHIP;10nF,10%,50V,X7R,1608	1	SA
....4	DC109	2203-000257	C-CER,CHIP;10nF,10%,50V,X7R,1608	1	SA
....4	DC111	2203-000257	C-CER,CHIP;10nF,10%,50V,X7R,1608	1	SA
....4	DC112	2203-000257	C-CER,CHIP;10nF,10%,50V,X7R,1608	1	SA
....4	DC114	2203-000257	C-CER,CHIP;10nF,10%,50V,X7R,1608	1	SA
....4	DC116	2203-000257	C-CER,CHIP;10nF,10%,50V,X7R,1608	1	SA
....4	DC118	2203-000257	C-CER,CHIP;10nF,10%,50V,X7R,1608	1	SA
....4	DC801	2203-000659	C-CER,CHIP;0.27nF,5%,50V,C0G,1608	1	SA
....4	DC804	2203-000659	C-CER,CHIP;0.27nF,5%,50V,C0G,1608	1	SA
....4	DC807	2203-000659	C-CER,CHIP;0.27nF,5%,50V,C0G,1608	1	SA
....4	DC810	2203-000659	C-CER,CHIP;0.27nF,5%,50V,C0G,1608	1	SA
....4	DC155	2203-001630	C-CER,CHIP;330nF,+80-20%,16V,Y5V,1608	1	SA
....4	DC700	2203-001630	C-CER,CHIP;330nF,+80-20%,16V,Y5V,1608	1	SA
....4	DC701	2203-001630	C-CER,CHIP;330nF,+80-20%,16V,Y5V,1608	1	SA
....4	DC101	2203-005005	C-CER,CHIP;100nF,10%,16V,X7R,1608	1	SA
....4	DC103	2203-005005	C-CER,CHIP;100nF,10%,16V,X7R,1608	1	SA
....4	DC104	2203-005005	C-CER,CHIP;100nF,10%,16V,X7R,1608	1	SA
....4	DC106	2203-005005	C-CER,CHIP;100nF,10%,16V,X7R,1608	1	SA
....4	DC108	2203-005005	C-CER,CHIP;100nF,10%,16V,X7R,1608	1	SA
....4	DC110	2203-005005	C-CER,CHIP;100nF,10%,16V,X7R,1608	1	SA
....4	DC113	2203-005005	C-CER,CHIP;100nF,10%,16V,X7R,1608	1	SA
....4	DC115	2203-005005	C-CER,CHIP;100nF,10%,16V,X7R,1608	1	SA
....4	DC117	2203-005005	C-CER,CHIP;100nF,10%,16V,X7R,1608	1	SA
....4	DC119	2203-005005	C-CER,CHIP;100nF,10%,16V,X7R,1608	1	SA
....4	DC120	2203-005005	C-CER,CHIP;100nF,10%,16V,X7R,1608	1	SA

ELECTRONIC SERVICE TIRGOVISTE

Level	Loc. No.	Code No.	Description & Specification	Q'ty	SA/SNA
....4	DC126	2203-005005	C-CER,CHIP;100nF,10%,16V,X7R,1608	1	SA
....4	DC127	2203-005005	C-CER,CHIP;100nF,10%,16V,X7R,1608	1	SA
....4	DC128	2203-005005	C-CER,CHIP;100nF,10%,16V,X7R,1608	1	SA
....4	DC129	2203-005005	C-CER,CHIP;100nF,10%,16V,X7R,1608	1	SA
....4	DC130	2203-005005	C-CER,CHIP;100nF,10%,16V,X7R,1608	1	SA
....4	DC131	2203-005005	C-CER,CHIP;100nF,10%,16V,X7R,1608	1	SA
....4	DC132	2203-005005	C-CER,CHIP;100nF,10%,16V,X7R,1608	1	SA
....4	DC133	2203-005005	C-CER,CHIP;100nF,10%,16V,X7R,1608	1	SA
....4	DC134	2203-005005	C-CER,CHIP;100nF,10%,16V,X7R,1608	1	SA
....4	DC135	2203-005005	C-CER,CHIP;100nF,10%,16V,X7R,1608	1	SA
....4	DC136	2203-005005	C-CER,CHIP;100nF,10%,16V,X7R,1608	1	SA
....4	DC137	2203-005005	C-CER,CHIP;100nF,10%,16V,X7R,1608	1	SA
....4	DC138	2203-005005	C-CER,CHIP;100nF,10%,16V,X7R,1608	1	SA
....4	DC139	2203-005005	C-CER,CHIP;100nF,10%,16V,X7R,1608	1	SA
....4	DC140	2203-005005	C-CER,CHIP;100nF,10%,16V,X7R,1608	1	SA
....4	DC141	2203-005005	C-CER,CHIP;100nF,10%,16V,X7R,1608	1	SA
....4	DC142	2203-005005	C-CER,CHIP;100nF,10%,16V,X7R,1608	1	SA
....4	DC143	2203-005005	C-CER,CHIP;100nF,10%,16V,X7R,1608	1	SA
....4	DC144	2203-005005	C-CER,CHIP;100nF,10%,16V,X7R,1608	1	SA
....4	DC145	2203-005005	C-CER,CHIP;100nF,10%,16V,X7R,1608	1	SA
....4	DC146	2203-005005	C-CER,CHIP;100nF,10%,16V,X7R,1608	1	SA
....4	DC147	2203-005005	C-CER,CHIP;100nF,10%,16V,X7R,1608	1	SA
....4	DC148	2203-005005	C-CER,CHIP;100nF,10%,16V,X7R,1608	1	SA
....4	DC149	2203-005005	C-CER,CHIP;100nF,10%,16V,X7R,1608	1	SA
....4	DC150	2203-005005	C-CER,CHIP;100nF,10%,16V,X7R,1608	1	SA
....4	DC151	2203-005005	C-CER,CHIP;100nF,10%,16V,X7R,1608	1	SA
....4	DC152	2203-005005	C-CER,CHIP;100nF,10%,16V,X7R,1608	1	SA
....4	DC153	2203-005005	C-CER,CHIP;100nF,10%,16V,X7R,1608	1	SA
....4	DC203	2203-005005	C-CER,CHIP;100nF,10%,16V,X7R,1608	1	SA
....4	DC400	2203-005005	C-CER,CHIP;100nF,10%,16V,X7R,1608	1	SA
....4	DC401	2203-005005	C-CER,CHIP;100nF,10%,16V,X7R,1608	1	SA
....4	DC402	2203-005005	C-CER,CHIP;100nF,10%,16V,X7R,1608	1	SA
....4	DC403	2203-005005	C-CER,CHIP;100nF,10%,16V,X7R,1608	1	SA
....4	DC404	2203-005005	C-CER,CHIP;100nF,10%,16V,X7R,1608	1	SA
....4	DC500	2203-005005	C-CER,CHIP;100nF,10%,16V,X7R,1608	1	SA
....4	DC501	2203-005005	C-CER,CHIP;100nF,10%,16V,X7R,1608	1	SA
....4	DC502	2203-005005	C-CER,CHIP;100nF,10%,16V,X7R,1608	1	SA
....4	DC503	2203-005005	C-CER,CHIP;100nF,10%,16V,X7R,1608	1	SA
....4	DC504	2203-005005	C-CER,CHIP;100nF,10%,16V,X7R,1608	1	SA
....4	DC505	2203-005005	C-CER,CHIP;100nF,10%,16V,X7R,1608	1	SA
....4	DC506	2203-005005	C-CER,CHIP;100nF,10%,16V,X7R,1608	1	SA
....4	DC507	2203-005005	C-CER,CHIP;100nF,10%,16V,X7R,1608	1	SA
....4	DC508	2203-005005	C-CER,CHIP;100nF,10%,16V,X7R,1608	1	SA
....4	DC509	2203-005005	C-CER,CHIP;100nF,10%,16V,X7R,1608	1	SA
....4	DC510	2203-005005	C-CER,CHIP;100nF,10%,16V,X7R,1608	1	SA
....4	DC511	2203-005005	C-CER,CHIP;100nF,10%,16V,X7R,1608	1	SA
....4	DC512	2203-005005	C-CER,CHIP;100nF,10%,16V,X7R,1608	1	SA
....4	DC513	2203-005005	C-CER,CHIP;100nF,10%,16V,X7R,1608	1	SA
....4	DC514	2203-005005	C-CER,CHIP;100nF,10%,16V,X7R,1608	1	SA
....4	DC601	2203-005005	C-CER,CHIP;100nF,10%,16V,X7R,1608	1	SA
....4	DC612	2203-005005	C-CER,CHIP;100nF,10%,16V,X7R,1608	1	SA
....4	DC614	2203-005005	C-CER,CHIP;100nF,10%,16V,X7R,1608	1	SA
....4	DC631	2203-005005	C-CER,CHIP;100nF,10%,16V,X7R,1608	1	SA
....4	DC632	2203-005005	C-CER,CHIP;100nF,10%,16V,X7R,1608	1	SA
....4	DC633	2203-005005	C-CER,CHIP;100nF,10%,16V,X7R,1608	1	SA
....4	DC902	2203-005005	C-CER,CHIP;100nF,10%,16V,X7R,1608	1	SA
....4	DC903	2203-005005	C-CER,CHIP;100nF,10%,16V,X7R,1608	1	SA
....4	DC905	2203-005005	C-CER,CHIP;100nF,10%,16V,X7R,1608	1	SA
....4	DC906	2203-005005	C-CER,CHIP;100nF,10%,16V,X7R,1608	1	SA
....4	DC907	2203-005005	C-CER,CHIP;100nF,10%,16V,X7R,1608	1	SA

ELECTRONIC SERVICE TIRGOVISTE

Level	Loc. No.	Code No.	Description & Specification	Q'ty	SA/SNA
....4	DC909	2203-005005	C-CER,CHIP;100nF,10%,16V,X7R,1608	1	SA
....4	DC910	2203-005005	C-CER,CHIP;100nF,10%,16V,X7R,1608	1	SA
....4	DC915	2203-005005	C-CER,CHIP;100nF,10%,16V,X7R,1608	1	SA
....4	DC916	2203-005005	C-CER,CHIP;100nF,10%,16V,X7R,1608	1	SA
....4	DC921	2203-005005	C-CER,CHIP;100nF,10%,16V,X7R,1608	1	SA
....4	DC922	2203-005005	C-CER,CHIP;100nF,10%,16V,X7R,1608	1	SA
....4	DC9906	2203-005005	C-CER,CHIP;100nF,10%,16V,X7R,1608	1	SA
....4	DC121	2402-000108	C-AL,SMD;10uF,20%,16V,WT,TP,4.3x4.3x5.2m	1	SA
....4	DC122	2402-000108	C-AL,SMD;10uF,20%,16V,WT,TP,4.3x4.3x5.2m	1	SA
....4	DC123	2402-000108	C-AL,SMD;10uF,20%,16V,WT,TP,4.3x4.3x5.2m	1	SA
....4	DC124	2402-000108	C-AL,SMD;10uF,20%,16V,WT,TP,4.3x4.3x5.2m	1	SA
....4	DC125	2402-000108	C-AL,SMD;10uF,20%,16V,WT,TP,4.3x4.3x5.2m	1	SA
....4	DC602	2402-000108	C-AL,SMD;10uF,20%,16V,WT,TP,4.3x4.3x5.2m	1	SA
....4	DC154	2402-001128	C-AL,SMD;100UF,20%,16V,WT,TP,6.3X5.7MM	1	SA
....4	DC522	2402-001128	C-AL,SMD;100UF,20%,16V,WT,TP,6.3X5.7MM	1	SA
....4	DC611	2402-001128	C-AL,SMD;100UF,20%,16V,WT,TP,6.3X5.7MM	1	SA
....4	DC634	2402-001128	C-AL,SMD;100UF,20%,16V,WT,TP,6.3X5.7MM	1	SA
....4	DC901	2402-001128	C-AL,SMD;100UF,20%,16V,WT,TP,6.3X5.7MM	1	SA
....4	DC904	2402-001128	C-AL,SMD;100UF,20%,16V,WT,TP,6.3X5.7MM	1	SA
....4	DC635	2402-001158	C-AL,SMD;1UF,20%,50V,WT,TP,4X5.2MM	1	SA
....4	DC636	2402-001158	C-AL,SMD;1UF,20%,50V,WT,TP,4X5.2MM	1	SA
....4	DC637	2402-001159	C-AL,SMD;3.3UF,20%,50V,WT,TP,4X5.2MM	1	SA
....4	DC638	2402-001159	C-AL,SMD;3.3UF,20%,50V,WT,TP,4X5.2MM	1	SA
....4	DC202	2402-001216	C-AL,SMD;470uF,20%,16V,WT,TP,10.3x10.3x1	1	SA
....4	DC613	2402-001216	C-AL,SMD;470uF,20%,16V,WT,TP,10.3x10.3x1	1	SA
....4	T0052	2703-000125	INDUCTOR-SMD;10uH,10%,2012	1	SA
....4	T0052	2703-000125	INDUCTOR-SMD;10uH,10%,2012	1	SA
....4	T0052	2703-000125	INDUCTOR-SMD;10uH,10%,2012	1	SA
....4	T0052	2703-000125	INDUCTOR-SMD;10uH,10%,2012	1	SA
....4	DX601	2806-001308	OSCILLATOR-VCXO;27MHZ,-,30PF,TP,3.3V,50M	1	SA
....4	T0568	3301-001569	BEAD-SMD;600ohm,2012,1000mA,TP,520ohm/90	1	SNA
....4	T0568	3301-001569	BEAD-SMD;600ohm,2012,1000mA,TP,520ohm/90	1	SNA
....4	T0568	3301-001569	BEAD-SMD;600ohm,2012,1000mA,TP,520ohm/90	1	SNA
....4	T0568	3301-001569	BEAD-SMD;600ohm,2012,1000mA,TP,520ohm/90	1	SNA
....4	T0568	3301-001569	BEAD-SMD;600ohm,2012,1000mA,TP,520ohm/90	1	SNA
....4	T0568	3301-001569	BEAD-SMD;600ohm,2012,1000mA,TP,520ohm/90	1	SNA
....4	T0568	3301-001569	BEAD-SMD;600ohm,2012,1000mA,TP,520ohm/90	1	SNA
....4	T0568	3301-001569	BEAD-SMD;600ohm,2012,1000mA,TP,520ohm/90	1	SNA
....4	MP1.1	BN41-00684A	PCB-DIGITAL B/D;BORDEAUX,FR-4,6L,1.0,1.6	1	SNA
....4	M0018	BN97-00805K	ASSY MICOM;T-XXXX-XXXX,DTV MODULE,XEE,20	1	SA
.....5	IC115	1107-001475	IC-FLASH MEMORY;29LV320,32MBIT,4MX8/2MX1	1	SA
....4	IC104	0801-002172	IC-CMOS LOGIC;74LCX16244,BUFFER/LINE DRI	1	SA
....4	T0087	1203-003704	IC-POSI.FIXED REG.;G953-18T6U,SOT-223,3P	1	SA
..2	M0014	BN94-01001B	ASSY PCB MAIN-AMZ;LE32R74BDX/*	1	SA
...3	T0245	0202-001522	SOLDER-WIRE FLUX;LFA3-107,-,D1.2,96.5Sn/	0.25	SNA
...3	JA2007	3701-001294	CONNECTOR-DSUB;15P,3R,FEMALE,STRAIGHT,AU	1	SA
...3	CN902	3703-001600	CONNECTOR-BACK PANEL;32P,2R,FEMALE,ANGLE	1	SA
...3	CN902	3703-001600	CONNECTOR-BACK PANEL;32P,2R,FEMALE,ANGLE	1	SA
...3	CN4002	3711-004484	HEADER-BOARD TO CABLE;BOX,5P,1R,2mm,STRA	1	SA
...3	CN2002_32	3711-004909	HEADER-BOARD TO CABLE;BOX,14P,2R,2MM,ANG	1	SA
...3	CN4004	3711-005606	HEADER-BOARD TO CABLE;BOX,30P,2R,2mm,STR	1	SA
...3	CN1001	3711-005942	HEADER-BOARD TO CABLE;BOX,16P,1R,2mm,STR	1	SA
...3	JA2001	3722-000498	JACK-SCART;21P,-,SN,BLK,NO	1	SA
...3	JA2005	3722-000498	JACK-SCART;21P,-,SN,BLK,NO	1	SA
...3	JA2003	3722-001061	JACK-PHONE;1P,3.6PI,AG,BLK,N	1	SA
...3	JA2006	3722-001061	JACK-PHONE;1P,3.6PI,AG,BLK,N	1	SA
...3	JA2010	3722-002360	JACK-PIN;3P,AU,GRN/BLU/RED,STRAIGHT	1	SA
...3	JA2002	3722-002362	JACK-PIN;2P,Sn,WHT/RED,STRAIGHT	1	SA
...3	JA2004	3722-002362	JACK-PIN;2P,Sn,WHT/RED,STRAIGHT	1	SA
...3	JA2009	3722-002362	JACK-PIN;2P,Sn,WHT/RED,STRAIGHT	1	SA

ELECTRONIC SERVICE TIRGOVISTE

Level	Loc. No.	Code No.	Description & Specification	Q'ty	SA/SNA
...3	T0562	6046-001013	STAND OFF;M3,L5,Ni PLT,SUM24L,#4-40	2	SNA
...3	CIS3	BN40-00080A	TUNER;DNOS403ZH261B(S),DNOS403ZH261B(S),	1	SA
...3	T0852	BN96-01470A	ASSY BOARD P-OPTICAL;HP-P5581,OPTICAL	1	SA
....4	CN906	3707-001067	CONNECTOR-OPTICAL;PLUG,SM,-,4.4/2.0mm	1	SA
...3	T0174	BN97-01036B	ASSY SMD;LE32R74BDX/*	1	SNA
....4	CIS05	0202-001477	SOLDER-CREAM;LST309-M,-,D20~45§-,96.5Sn/	3.577	SNA
....4	D2003	0401-001056	DIODE-SWITCHING;MMBD4148SE,100V,200mA,SO	1	SA
....4	D2010	0401-001056	DIODE-SWITCHING;MMBD4148SE,100V,200mA,SO	1	SA
....4	D2011	0401-001056	DIODE-SWITCHING;MMBD4148SE,100V,200mA,SO	1	SA
....4	D2012	0401-001056	DIODE-SWITCHING;MMBD4148SE,100V,200mA,SO	1	SA
....4	D2013	0401-001056	DIODE-SWITCHING;MMBD4148SE,100V,200mA,SO	1	SA
....4	D2016	0401-001056	DIODE-SWITCHING;MMBD4148SE,100V,200mA,SO	1	SA
....4	D2017	0401-001056	DIODE-SWITCHING;MMBD4148SE,100V,200mA,SO	1	SA
....4	D2018	0401-001056	DIODE-SWITCHING;MMBD4148SE,100V,200mA,SO	1	SA
....4	D2019	0401-001056	DIODE-SWITCHING;MMBD4148SE,100V,200mA,SO	1	SA
....4	D2020	0401-001056	DIODE-SWITCHING;MMBD4148SE,100V,200mA,SO	1	SA
....4	D2021	0401-001056	DIODE-SWITCHING;MMBD4148SE,100V,200mA,SO	1	SA
....4	D2022	0401-001056	DIODE-SWITCHING;MMBD4148SE,100V,200mA,SO	1	SA
....4	D2023	0401-001056	DIODE-SWITCHING;MMBD4148SE,100V,200mA,SO	1	SA
....4	D2032	0401-001056	DIODE-SWITCHING;MMBD4148SE,100V,200mA,SO	1	SA
....4	D2033	0401-001056	DIODE-SWITCHING;MMBD4148SE,100V,200mA,SO	1	SA
....4	D2034	0401-001056	DIODE-SWITCHING;MMBD4148SE,100V,200mA,SO	1	SA
....4	D2044	0401-001056	DIODE-SWITCHING;MMBD4148SE,100V,200mA,SO	1	SA
....4	D2057	0401-001056	DIODE-SWITCHING;MMBD4148SE,100V,200mA,SO	1	SA
....4	D5001	0401-001056	DIODE-SWITCHING;MMBD4148SE,100V,200mA,SO	1	SA
....4	D5002	0401-001056	DIODE-SWITCHING;MMBD4148SE,100V,200mA,SO	1	SA
....4	D5003	0401-001056	DIODE-SWITCHING;MMBD4148SE,100V,200mA,SO	1	SA
....4	D5004	0401-001056	DIODE-SWITCHING;MMBD4148SE,100V,200mA,SO	1	SA
....4	D5005	0401-001056	DIODE-SWITCHING;MMBD4148SE,100V,200mA,SO	1	SA
....4	D5006	0401-001056	DIODE-SWITCHING;MMBD4148SE,100V,200mA,SO	1	SA
....4	D1001	0402-000553	DIODE-SCHOTTKY;"SS24,B240",40V,2000mA,DO	1	SA
....4	D1004	0402-000553	DIODE-SCHOTTKY;"SS24,B240",40V,2000mA,DO	1	SA
....4	D1008	0403-000258	DIODE-ZENER;BZX84C5V6,5.2-6V,225mW,SOT-2	1	SA
....4	D3003	0403-000258	DIODE-ZENER;BZX84C5V6,5.2-6V,225mW,SOT-2	1	SA
....4	D2001	0403-000620	DIODE-ZENER;RLZ5.6B,5.45-5.73V,500mW,LL-	1	SA
....4	D2002	0403-000620	DIODE-ZENER;RLZ5.6B,5.45-5.73V,500mW,LL-	1	SA
....4	D2040	0403-000620	DIODE-ZENER;RLZ5.6B,5.45-5.73V,500mW,LL-	1	SA
....4	D2041	0403-000620	DIODE-ZENER;RLZ5.6B,5.45-5.73V,500mW,LL-	1	SA
....4	D2042	0403-000620	DIODE-ZENER;RLZ5.6B,5.45-5.73V,500mW,LL-	1	SA
....4	D2043	0403-000620	DIODE-ZENER;RLZ5.6B,5.45-5.73V,500mW,LL-	1	SA
....4	D2064	0403-000620	DIODE-ZENER;RLZ5.6B,5.45-5.73V,500mW,LL-	1	SA
....4	D2065	0403-000620	DIODE-ZENER;RLZ5.6B,5.45-5.73V,500mW,LL-	1	SA
....4	D3006	0403-000620	DIODE-ZENER;RLZ5.6B,5.45-5.73V,500mW,LL-	1	SA
....4	D3008	0403-000620	DIODE-ZENER;RLZ5.6B,5.45-5.73V,500mW,LL-	1	SA
....4	D4001	0403-000620	DIODE-ZENER;RLZ5.6B,5.45-5.73V,500mW,LL-	1	SA
....4	D4002	0403-000620	DIODE-ZENER;RLZ5.6B,5.45-5.73V,500mW,LL-	1	SA
....4	D4003	0403-000620	DIODE-ZENER;RLZ5.6B,5.45-5.73V,500mW,LL-	1	SA
....4	D4005	0403-000620	DIODE-ZENER;RLZ5.6B,5.45-5.73V,500mW,LL-	1	SA
....4	D4006	0403-000620	DIODE-ZENER;RLZ5.6B,5.45-5.73V,500mW,LL-	1	SA
....4	D4007	0403-000620	DIODE-ZENER;RLZ5.6B,5.45-5.73V,500mW,LL-	1	SA
....4	D4008	0403-000620	DIODE-ZENER;RLZ5.6B,5.45-5.73V,500mW,LL-	1	SA
....4	D4009	0403-000620	DIODE-ZENER;RLZ5.6B,5.45-5.73V,500mW,LL-	1	SA
....4	D4010	0403-000620	DIODE-ZENER;RLZ5.6B,5.45-5.73V,500mW,LL-	1	SA
....4	D4011	0403-000620	DIODE-ZENER;RLZ5.6B,5.45-5.73V,500mW,LL-	1	SA
....4	D4012	0403-000620	DIODE-ZENER;RLZ5.6B,5.45-5.73V,500mW,LL-	1	SA
....4	D2004	0403-001016	DIODE-ZENER;RLZ6.2B,5.96-6.27V,500mW,LL-	1	SA
....4	D2009	0403-001169	DIODE-ZENER;RLZ16C,15.96-16.51V,500MW,LL	1	SA
....4	D2039	0403-001169	DIODE-ZENER;RLZ16C,15.96-16.51V,500MW,LL	1	SA
....4	D2005	0406-001172	DIODE-TVS;CDS3C30GTH,48V,0W,SMD	1	SA
....4	D2006	0406-001172	DIODE-TVS;CDS3C30GTH,48V,0W,SMD	1	SA

ELECTRONICSERVICE TIRGOVISTE

Level	Loc. No.	Code No.	Description & Specification	Q'ty	SA/SNA
....4	D2007	0406-001172	DIODE-TVS;CDS3C30GTH,48V,0W,SMD	1	SA
....4	D2008	0406-001172	DIODE-TVS;CDS3C30GTH,48V,0W,SMD	1	SA
....4	D2014	0406-001172	DIODE-TVS;CDS3C30GTH,48V,0W,SMD	1	SA
....4	D2015	0406-001172	DIODE-TVS;CDS3C30GTH,48V,0W,SMD	1	SA
....4	D2024	0406-001172	DIODE-TVS;CDS3C30GTH,48V,0W,SMD	1	SA
....4	D2025	0406-001172	DIODE-TVS;CDS3C30GTH,48V,0W,SMD	1	SA
....4	D2026	0406-001172	DIODE-TVS;CDS3C30GTH,48V,0W,SMD	1	SA
....4	D2027	0406-001172	DIODE-TVS;CDS3C30GTH,48V,0W,SMD	1	SA
....4	D2028	0406-001172	DIODE-TVS;CDS3C30GTH,48V,0W,SMD	1	SA
....4	D2029	0406-001172	DIODE-TVS;CDS3C30GTH,48V,0W,SMD	1	SA
....4	D2030	0406-001172	DIODE-TVS;CDS3C30GTH,48V,0W,SMD	1	SA
....4	D2031	0406-001172	DIODE-TVS;CDS3C30GTH,48V,0W,SMD	1	SA
....4	D2035	0406-001172	DIODE-TVS;CDS3C30GTH,48V,0W,SMD	1	SA
....4	D2036	0406-001172	DIODE-TVS;CDS3C30GTH,48V,0W,SMD	1	SA
....4	D2037	0406-001172	DIODE-TVS;CDS3C30GTH,48V,0W,SMD	1	SA
....4	D2038	0406-001172	DIODE-TVS;CDS3C30GTH,48V,0W,SMD	1	SA
....4	D2051	0406-001172	DIODE-TVS;CDS3C30GTH,48V,0W,SMD	1	SA
....4	D2052	0406-001172	DIODE-TVS;CDS3C30GTH,48V,0W,SMD	1	SA
....4	D2054	0406-001172	DIODE-TVS;CDS3C30GTH,48V,0W,SMD	1	SA
....4	D2055	0406-001172	DIODE-TVS;CDS3C30GTH,48V,0W,SMD	1	SA
....4	D2056	0406-001172	DIODE-TVS;CDS3C30GTH,48V,0W,SMD	1	SA
....4	D1002	0407-000123	DIODE-ARRAY;DAN202K,80V,100mA,CA2-3,SOT-	1	SA
....4	D1009	0407-000123	DIODE-ARRAY;DAN202K,80V,100mA,CA2-3,SOT-	1	SA
....4	D3001	0407-000123	DIODE-ARRAY;DAN202K,80V,100mA,CA2-3,SOT-	1	SA
....4	D3002	0407-000123	DIODE-ARRAY;DAN202K,80V,100mA,CA2-3,SOT-	1	SA
....4	D3007_32	0407-000123	DIODE-ARRAY;DAN202K,80V,100mA,CA2-3,SOT-	1	SA
....4	Q1007	0501-000280	TR-SMALL SIGNAL;KSA1182,PNP,150MW,SOT-23	1	SA
....4	Q1001	0501-000342	TR-SMALL SIGNAL;KSC1623-Y,NPN,200mW,SOT-	1	SA
....4	Q1002	0501-000342	TR-SMALL SIGNAL;KSC1623-Y,NPN,200mW,SOT-	1	SA
....4	Q1005	0501-000342	TR-SMALL SIGNAL;KSC1623-Y,NPN,200mW,SOT-	1	SA
....4	Q1006	0501-000342	TR-SMALL SIGNAL;KSC1623-Y,NPN,200mW,SOT-	1	SA
....4	Q1008	0501-000342	TR-SMALL SIGNAL;KSC1623-Y,NPN,200mW,SOT-	1	SA
....4	Q1009	0501-000342	TR-SMALL SIGNAL;KSC1623-Y,NPN,200mW,SOT-	1	SA
....4	Q1010	0501-000342	TR-SMALL SIGNAL;KSC1623-Y,NPN,200mW,SOT-	1	SA
....4	Q1011	0501-000342	TR-SMALL SIGNAL;KSC1623-Y,NPN,200mW,SOT-	1	SA
....4	Q1013	0501-000342	TR-SMALL SIGNAL;KSC1623-Y,NPN,200mW,SOT-	1	SA
....4	Q1014	0501-000342	TR-SMALL SIGNAL;KSC1623-Y,NPN,200mW,SOT-	1	SA
....4	Q2001	0501-000342	TR-SMALL SIGNAL;KSC1623-Y,NPN,200mW,SOT-	1	SA
....4	Q3001	0501-000342	TR-SMALL SIGNAL;KSC1623-Y,NPN,200mW,SOT-	1	SA
....4	Q3003	0501-000342	TR-SMALL SIGNAL;KSC1623-Y,NPN,200mW,SOT-	1	SA
....4	Q3008	0501-000342	TR-SMALL SIGNAL;KSC1623-Y,NPN,200mW,SOT-	1	SA
....4	Q3010	0501-000342	TR-SMALL SIGNAL;KSC1623-Y,NPN,200mW,SOT-	1	SA
....4	Q3011	0501-000342	TR-SMALL SIGNAL;KSC1623-Y,NPN,200mW,SOT-	1	SA
....4	Q4001	0501-000342	TR-SMALL SIGNAL;KSC1623-Y,NPN,200mW,SOT-	1	SA
....4	Q5010	0501-000342	TR-SMALL SIGNAL;KSC1623-Y,NPN,200mW,SOT-	1	SA
....4	Q1003	0501-002080	TR-SMALL SIGNAL;2SC2412K,NPN,200mW,SC-59	1	SA
....4	Q1004	0501-002080	TR-SMALL SIGNAL;2SC2412K,NPN,200mW,SC-59	1	SA
....4	Q5011	0501-002080	TR-SMALL SIGNAL;2SC2412K,NPN,200mW,SC-59	1	SA
....4	Q409	0505-000110	FET-SILICON;2N7002,N,60V,115mA,7.5ohm,0.	1	SA
....4	Q409	0505-000110	FET-SILICON;2N7002,N,60V,115mA,7.5ohm,0.	1	SA
....4	Q409	0505-000110	FET-SILICON;2N7002,N,60V,115mA,7.5ohm,0.	1	SA
....4	Q409	0505-000110	FET-SILICON;2N7002,N,60V,115mA,7.5ohm,0.	1	SA
....4	Q409	0505-000110	FET-SILICON;2N7002,N,60V,115mA,7.5ohm,0.	1	SA
....4	Q409	0505-001170	FET-SILICON;SI9933ADY-T1,P,-20V,3.4A,0.0	1	SA
....4	IC104	0801-002095	IC-CMOS LOGIC;74LCX245,TRANSCEIVER,TSSOP	1	SA
....4	IC3002	0903-001432	IC-MICROCOMPUTER;M30840SGP,16Bit,LQFP,10	1	SA
....4	IC1003	1001-000164	IC-ANALOG MULTIPLEX;74HC4052,CMOS,SOP,16	1	SA
....4	IC1006	1001-000164	IC-ANALOG MULTIPLEX;74HC4052,CMOS,SOP,16	1	SA
....4	IC106	1001-001082	IC-VIDEO SWITCH;BA7657F,-,SOP,24P,300MIL	1	SA
....4	IC3006	1001-001109	IC-ANALOG SWITCH;FST3125M,BUS SWITCH & C	1	SA

ELECTRONIC SERVICE TIRGOVISTE

Level	Loc. No.	Code No.	Description & Specification	Q'ty	SA/SNA
....4	IC5005	1001-001109	IC-ANALOG SWITCH;FST3125M,BUS SWITCH & C	1	SA
....4	IC107	1002-001399	IC-D/A CONVERTER;PCM1754,24BIT,SSOP,16P,	1	SA
....4	IC110	1006-001076	IC-DRIVER/RECEIVER;MAX232ECWE+T,SOP,16P,	1	SA
....4	IC112	1103-000129	IC-EEPROM;24C02,2Kbit,256x8Bit,SOP,8P,5x	1	SA
....4	IC112	1103-000129	IC-EEPROM;24C02,2Kbit,256x8Bit,SOP,8P,5x	1	SA
....4	IC112	1103-001279	IC-EEPROM;24C32,32Kbit,4Kx8Bit,SOP,8P,5x	1	SA
....4	IC5002	1105-001538	IC-VIDEO RAM;K4D263238,-,128M,4x1Mx32Bit	1	SA
....4	DU410	1201-000166	IC-OP AMP;LM358,SOP,ST,8P,150MIL,DUAL,10	1	SA
....4	T0085	1201-002136	IC-AUDIO AMP;LM4810,MSOP,8P,3x3mm,DUAL,-	1	SA
....4	T0085	1201-002246	IC-AUDIO AMP;STA323W,SO,36P,15.9x11mm,-,	1	SA
....4	IC150	1203-001009	IC-SWITCH REG.;3172,SOP,8P,244MIL,PLASTI	1	SA
....4	IC3009	1203-001559	IC-RESET;DS1834A,SOIC,8P,150MIL,PLASTIC,	1	SA
....4	T0087	1203-001815	IC-POSI.FIXED REG.;78M09,TO-252,3P,-,PLA	1	SA
....4	T0087	1203-001816	IC-POSI.FIXED REG.;78M08,TO-252,3P,-,PLA	1	SA
....4	IC3008_32	1203-001824	IC-VOL. DETECTOR;7042,SOT-89,3P,-,PLASTI	1	SA
....4	T0087	1203-002842	IC-POSI.FIXED REG.;AP1117D-33A,TO-252,3P	1	SA
....4	T0087	1203-002842	IC-POSI.FIXED REG.;AP1117D-33A,TO-252,3P	1	SA
....4	T0087	1203-002842	IC-POSI.FIXED REG.;AP1117D-33A,TO-252,3P	1	SA
....4	T0087	1203-002855	IC-POSI.FIXED REG.;MC33269DTRK-5.0,DPRK,	1	SA
....4	T0087	1203-002974	IC-POSI.FIXED REG.;AP1117D-25A,TO-252,3P	1	SA
....4	T0170	1203-003059	IC-SWITCH VOL. REG.;MP1583,SOIC,8P,4.9x3	1	SA
....4	IC1009	1204-002464	IC-AUDIO PROCESSOR;STV8257DSX,TQFP,80P,1	1	SA
....4	IC118	1204-002503	IC-VIDEO PROCESS;SVP-PX56-7256,PQFP,256P	1	SNA
....4	R2024	2007-000040	R-CHIP;150ohm,1%,1/10W,TP,1608	1	SA
....4	R5026	2007-000043	R-CHIP;1Kohm,1%,1/10W,TP,1608	1	SA
....4	R5029	2007-000043	R-CHIP;1Kohm,1%,1/10W,TP,1608	1	SA
....4	R3088	2007-000052	R-CHIP;10Kohm,1%,1/10W,TP,1608	1	SA
....4	R3100	2007-000052	R-CHIP;10Kohm,1%,1/10W,TP,1608	1	SA
....4	R3101	2007-000052	R-CHIP;10Kohm,1%,1/10W,TP,1608	1	SA
....4	R3102	2007-000052	R-CHIP;10Kohm,1%,1/10W,TP,1608	1	SA
....4	R3103	2007-000052	R-CHIP;10Kohm,1%,1/10W,TP,1608	1	SA
....4	R3104	2007-000052	R-CHIP;10Kohm,1%,1/10W,TP,1608	1	SA
....4	R3105	2007-000052	R-CHIP;10Kohm,1%,1/10W,TP,1608	1	SA
....4	R3106	2007-000052	R-CHIP;10Kohm,1%,1/10W,TP,1608	1	SA
....4	R3107	2007-000052	R-CHIP;10Kohm,1%,1/10W,TP,1608	1	SA
....4	R3130	2007-000052	R-CHIP;10Kohm,1%,1/10W,TP,1608	1	SA
....4	R3141	2007-000052	R-CHIP;10Kohm,1%,1/10W,TP,1608	1	SA
....4	R5013	2007-000060	R-CHIP;100Kohm,1%,1/10W,TP,1608	1	SA
....4	R1066	2007-000067	R-CHIP;15Kohm,1%,1/10W,TP,1608	1	SA
....4	R1059	2007-000070	R-CHIP;0ohm,5%,1/10W,TP,1608	1	SA
....4	R1085	2007-000070	R-CHIP;0ohm,5%,1/10W,TP,1608	1	SA
....4	R1086	2007-000070	R-CHIP;0ohm,5%,1/10W,TP,1608	1	SA
....4	R1087	2007-000070	R-CHIP;0ohm,5%,1/10W,TP,1608	1	SA
....4	R2055	2007-000070	R-CHIP;0ohm,5%,1/10W,TP,1608	1	SA
....4	R2064	2007-000070	R-CHIP;0ohm,5%,1/10W,TP,1608	1	SA
....4	R2069_32	2007-000070	R-CHIP;0ohm,5%,1/10W,TP,1608	1	SA
....4	R2070_32	2007-000070	R-CHIP;0ohm,5%,1/10W,TP,1608	1	SA
....4	R2071_32	2007-000070	R-CHIP;0ohm,5%,1/10W,TP,1608	1	SA
....4	R2080	2007-000070	R-CHIP;0ohm,5%,1/10W,TP,1608	1	SA
....4	R2088_32	2007-000070	R-CHIP;0ohm,5%,1/10W,TP,1608	1	SA
....4	R2089_32	2007-000070	R-CHIP;0ohm,5%,1/10W,TP,1608	1	SA
....4	R2090_32	2007-000070	R-CHIP;0ohm,5%,1/10W,TP,1608	1	SA
....4	R2091_32	2007-000070	R-CHIP;0ohm,5%,1/10W,TP,1608	1	SA
....4	R3003	2007-000070	R-CHIP;0ohm,5%,1/10W,TP,1608	1	SA
....4	R3019	2007-000070	R-CHIP;0ohm,5%,1/10W,TP,1608	1	SA
....4	R3024	2007-000070	R-CHIP;0ohm,5%,1/10W,TP,1608	1	SA
....4	R3025_LVDS	2007-000070	R-CHIP;0ohm,5%,1/10W,TP,1608	1	SA
....4	R3026	2007-000070	R-CHIP;0ohm,5%,1/10W,TP,1608	1	SA
....4	R3027	2007-000070	R-CHIP;0ohm,5%,1/10W,TP,1608	1	SA
....4	R3028	2007-000070	R-CHIP;0ohm,5%,1/10W,TP,1608	1	SA

ELECTRONIC SERVICE TIRGOVISTE

Level	Loc. No.	Code No.	Description & Specification	Q'ty	SA/SNA
....4	R3029	2007-000070	R-CHIP;0ohm,5%,1/10W,TP,1608	1	SA
....4	R3031	2007-000070	R-CHIP;0ohm,5%,1/10W,TP,1608	1	SA
....4	R3032	2007-000070	R-CHIP;0ohm,5%,1/10W,TP,1608	1	SA
....4	R3033	2007-000070	R-CHIP;0ohm,5%,1/10W,TP,1608	1	SA
....4	R3035	2007-000070	R-CHIP;0ohm,5%,1/10W,TP,1608	1	SA
....4	R3037	2007-000070	R-CHIP;0ohm,5%,1/10W,TP,1608	1	SA
....4	R3039	2007-000070	R-CHIP;0ohm,5%,1/10W,TP,1608	1	SA
....4	R3040	2007-000070	R-CHIP;0ohm,5%,1/10W,TP,1608	1	SA
....4	R3041	2007-000070	R-CHIP;0ohm,5%,1/10W,TP,1608	1	SA
....4	R3043	2007-000070	R-CHIP;0ohm,5%,1/10W,TP,1608	1	SA
....4	R3047_LVDS	2007-000070	R-CHIP;0ohm,5%,1/10W,TP,1608	1	SA
....4	R3089	2007-000070	R-CHIP;0ohm,5%,1/10W,TP,1608	1	SA
....4	R3090	2007-000070	R-CHIP;0ohm,5%,1/10W,TP,1608	1	SA
....4	R3117	2007-000070	R-CHIP;0ohm,5%,1/10W,TP,1608	1	SA
....4	R3118	2007-000070	R-CHIP;0ohm,5%,1/10W,TP,1608	1	SA
....4	R3132	2007-000070	R-CHIP;0ohm,5%,1/10W,TP,1608	1	SA
....4	R4001	2007-000070	R-CHIP;0ohm,5%,1/10W,TP,1608	1	SA
....4	R4002	2007-000070	R-CHIP;0ohm,5%,1/10W,TP,1608	1	SA
....4	R4003	2007-000070	R-CHIP;0ohm,5%,1/10W,TP,1608	1	SA
....4	R4012	2007-000070	R-CHIP;0ohm,5%,1/10W,TP,1608	1	SA
....4	R4016	2007-000070	R-CHIP;0ohm,5%,1/10W,TP,1608	1	SA
....4	R4017	2007-000070	R-CHIP;0ohm,5%,1/10W,TP,1608	1	SA
....4	R4018	2007-000070	R-CHIP;0ohm,5%,1/10W,TP,1608	1	SA
....4	R4019	2007-000070	R-CHIP;0ohm,5%,1/10W,TP,1608	1	SA
....4	R4032	2007-000070	R-CHIP;0ohm,5%,1/10W,TP,1608	1	SA
....4	R4033	2007-000070	R-CHIP;0ohm,5%,1/10W,TP,1608	1	SA
....4	R4035	2007-000070	R-CHIP;0ohm,5%,1/10W,TP,1608	1	SA
....4	R4051_32	2007-000070	R-CHIP;0ohm,5%,1/10W,TP,1608	1	SA
....4	R4086_EN	2007-000070	R-CHIP;0ohm,5%,1/10W,TP,1608	1	SA
....4	R4090	2007-000070	R-CHIP;0ohm,5%,1/10W,TP,1608	1	SA
....4	R5012	2007-000070	R-CHIP;0ohm,5%,1/10W,TP,1608	1	SA
....4	R5014	2007-000070	R-CHIP;0ohm,5%,1/10W,TP,1608	1	SA
....4	R5068	2007-000070	R-CHIP;0ohm,5%,1/10W,TP,1608	1	SA
....4	R5076	2007-000070	R-CHIP;0ohm,5%,1/10W,TP,1608	1	SA
....4	R5084	2007-000070	R-CHIP;0ohm,5%,1/10W,TP,1608	1	SA
....4	R5087	2007-000070	R-CHIP;0ohm,5%,1/10W,TP,1608	1	SA
....4	R5099	2007-000070	R-CHIP;0ohm,5%,1/10W,TP,1608	1	SA
....4	R5100	2007-000070	R-CHIP;0ohm,5%,1/10W,TP,1608	1	SA
....4	R5101	2007-000070	R-CHIP;0ohm,5%,1/10W,TP,1608	1	SA
....4	R5103	2007-000070	R-CHIP;0ohm,5%,1/10W,TP,1608	1	SA
....4	R5115	2007-000070	R-CHIP;0ohm,5%,1/10W,TP,1608	1	SA
....4	R5116	2007-000070	R-CHIP;0ohm,5%,1/10W,TP,1608	1	SA
....4	R5117	2007-000070	R-CHIP;0ohm,5%,1/10W,TP,1608	1	SA
....4	R5120	2007-000070	R-CHIP;0ohm,5%,1/10W,TP,1608	1	SA
....4	R1084	2007-000071	R-CHIP;22ohm,5%,1/10W,TP,1608	1	SA
....4	R1095	2007-000071	R-CHIP;22ohm,5%,1/10W,TP,1608	1	SA
....4	R2050	2007-000071	R-CHIP;22ohm,5%,1/10W,TP,1608	1	SA
....4	R2063	2007-000071	R-CHIP;22ohm,5%,1/10W,TP,1608	1	SA
....4	R2106	2007-000071	R-CHIP;22ohm,5%,1/10W,TP,1608	1	SA
....4	R2107	2007-000071	R-CHIP;22ohm,5%,1/10W,TP,1608	1	SA
....4	R2108	2007-000071	R-CHIP;22ohm,5%,1/10W,TP,1608	1	SA
....4	R2109	2007-000071	R-CHIP;22ohm,5%,1/10W,TP,1608	1	SA
....4	R2110	2007-000071	R-CHIP;22ohm,5%,1/10W,TP,1608	1	SA
....4	R2111	2007-000071	R-CHIP;22ohm,5%,1/10W,TP,1608	1	SA
....4	R2112	2007-000071	R-CHIP;22ohm,5%,1/10W,TP,1608	1	SA
....4	R2113	2007-000071	R-CHIP;22ohm,5%,1/10W,TP,1608	1	SA
....4	R4015	2007-000071	R-CHIP;22ohm,5%,1/10W,TP,1608	1	SA
....4	R4020	2007-000071	R-CHIP;22ohm,5%,1/10W,TP,1608	1	SA
....4	R4093	2007-000071	R-CHIP;22ohm,5%,1/10W,TP,1608	1	SA
....4	R5030	2007-000071	R-CHIP;22ohm,5%,1/10W,TP,1608	1	SA

ELECTRONIC SERVICE TIRGOVISTE

Level	Loc. No.	Code No.	Description & Specification	Q'ty	SA/SNA
....4	R5031	2007-000071	R-CHIP;22ohm,5%,1/10W,TP,1608	1	SA
....4	R5032	2007-000071	R-CHIP;22ohm,5%,1/10W,TP,1608	1	SA
....4	R5033	2007-000071	R-CHIP;22ohm,5%,1/10W,TP,1608	1	SA
....4	R5061	2007-000071	R-CHIP;22ohm,5%,1/10W,TP,1608	1	SA
....4	R5065	2007-000071	R-CHIP;22ohm,5%,1/10W,TP,1608	1	SA
....4	R5071	2007-000071	R-CHIP;22ohm,5%,1/10W,TP,1608	1	SA
....4	R5077	2007-000071	R-CHIP;22ohm,5%,1/10W,TP,1608	1	SA
....4	R5081	2007-000071	R-CHIP;22ohm,5%,1/10W,TP,1608	1	SA
....4	R5085	2007-000071	R-CHIP;22ohm,5%,1/10W,TP,1608	1	SA
....4	R5088	2007-000071	R-CHIP;22ohm,5%,1/10W,TP,1608	1	SA
....4	R5090	2007-000071	R-CHIP;22ohm,5%,1/10W,TP,1608	1	SA
....4	R5094	2007-000071	R-CHIP;22ohm,5%,1/10W,TP,1608	1	SA
....4	R5098	2007-000071	R-CHIP;22ohm,5%,1/10W,TP,1608	1	SA
....4	R5102	2007-000071	R-CHIP;22ohm,5%,1/10W,TP,1608	1	SA
....4	R5104	2007-000071	R-CHIP;22ohm,5%,1/10W,TP,1608	1	SA
....4	R5106	2007-000071	R-CHIP;22ohm,5%,1/10W,TP,1608	1	SA
....4	R5108	2007-000071	R-CHIP;22ohm,5%,1/10W,TP,1608	1	SA
....4	R1061	2007-000072	R-CHIP;47ohm,5%,1/10W,TP,1608	1	SA
....4	R1063	2007-000072	R-CHIP;47ohm,5%,1/10W,TP,1608	1	SA
....4	R2007	2007-000072	R-CHIP;47ohm,5%,1/10W,TP,1608	1	SA
....4	R2008	2007-000072	R-CHIP;47ohm,5%,1/10W,TP,1608	1	SA
....4	R2049	2007-000072	R-CHIP;47ohm,5%,1/10W,TP,1608	1	SA
....4	R2051	2007-000072	R-CHIP;47ohm,5%,1/10W,TP,1608	1	SA
....4	R4104	2007-000072	R-CHIP;47ohm,5%,1/10W,TP,1608	1	SA
....4	R4105	2007-000072	R-CHIP;47ohm,5%,1/10W,TP,1608	1	SA
....4	R4106	2007-000072	R-CHIP;47ohm,5%,1/10W,TP,1608	1	SA
....4	R4107	2007-000072	R-CHIP;47ohm,5%,1/10W,TP,1608	1	SA
....4	R4108	2007-000072	R-CHIP;47ohm,5%,1/10W,TP,1608	1	SA
....4	R4109	2007-000072	R-CHIP;47ohm,5%,1/10W,TP,1608	1	SA
....4	R4110	2007-000072	R-CHIP;47ohm,5%,1/10W,TP,1608	1	SA
....4	R4111	2007-000072	R-CHIP;47ohm,5%,1/10W,TP,1608	1	SA
....4	R4112	2007-000072	R-CHIP;47ohm,5%,1/10W,TP,1608	1	SA
....4	R4113	2007-000072	R-CHIP;47ohm,5%,1/10W,TP,1608	1	SA
....4	R5019	2007-000072	R-CHIP;47ohm,5%,1/10W,TP,1608	1	SA
....4	R5020	2007-000072	R-CHIP;47ohm,5%,1/10W,TP,1608	1	SA
....4	R5048	2007-000072	R-CHIP;47ohm,5%,1/10W,TP,1608	1	SA
....4	R5050	2007-000072	R-CHIP;47ohm,5%,1/10W,TP,1608	1	SA
....4	R1009	2007-000074	R-CHIP;100ohm,5%,1/10W,TP,1608	1	SA
....4	R1010	2007-000074	R-CHIP;100ohm,5%,1/10W,TP,1608	1	SA
....4	R1011	2007-000074	R-CHIP;100ohm,5%,1/10W,TP,1608	1	SA
....4	R1012	2007-000074	R-CHIP;100ohm,5%,1/10W,TP,1608	1	SA
....4	R1013	2007-000074	R-CHIP;100ohm,5%,1/10W,TP,1608	1	SA
....4	R1014	2007-000074	R-CHIP;100ohm,5%,1/10W,TP,1608	1	SA
....4	R1017	2007-000074	R-CHIP;100ohm,5%,1/10W,TP,1608	1	SA
....4	R1018	2007-000074	R-CHIP;100ohm,5%,1/10W,TP,1608	1	SA
....4	R1032	2007-000074	R-CHIP;100ohm,5%,1/10W,TP,1608	1	SA
....4	R1033	2007-000074	R-CHIP;100ohm,5%,1/10W,TP,1608	1	SA
....4	R1037	2007-000074	R-CHIP;100ohm,5%,1/10W,TP,1608	1	SA
....4	R1040	2007-000074	R-CHIP;100ohm,5%,1/10W,TP,1608	1	SA
....4	R1042	2007-000074	R-CHIP;100ohm,5%,1/10W,TP,1608	1	SA
....4	R1047	2007-000074	R-CHIP;100ohm,5%,1/10W,TP,1608	1	SA
....4	R1048	2007-000074	R-CHIP;100ohm,5%,1/10W,TP,1608	1	SA
....4	R1049	2007-000074	R-CHIP;100ohm,5%,1/10W,TP,1608	1	SA
....4	R1050	2007-000074	R-CHIP;100ohm,5%,1/10W,TP,1608	1	SA
....4	R1052	2007-000074	R-CHIP;100ohm,5%,1/10W,TP,1608	1	SA
....4	R1053	2007-000074	R-CHIP;100ohm,5%,1/10W,TP,1608	1	SA
....4	R1054	2007-000074	R-CHIP;100ohm,5%,1/10W,TP,1608	1	SA
....4	R1055	2007-000074	R-CHIP;100ohm,5%,1/10W,TP,1608	1	SA
....4	R1056	2007-000074	R-CHIP;100ohm,5%,1/10W,TP,1608	1	SA
....4	R1091	2007-000074	R-CHIP;100ohm,5%,1/10W,TP,1608	1	SA

ELECTRONIC SERVICE TIRGOVISTE

Level	Loc. No.	Code No.	Description & Specification	Q'ty	SA/SNA
....4	R1092	2007-000074	R-CHIP;100ohm,5%,1/10W,TP,1608	1	SA
....4	R1093	2007-000074	R-CHIP;100ohm,5%,1/10W,TP,1608	1	SA
....4	R2018	2007-000074	R-CHIP;100ohm,5%,1/10W,TP,1608	1	SA
....4	R2022	2007-000074	R-CHIP;100ohm,5%,1/10W,TP,1608	1	SA
....4	R2023	2007-000074	R-CHIP;100ohm,5%,1/10W,TP,1608	1	SA
....4	R2029	2007-000074	R-CHIP;100ohm,5%,1/10W,TP,1608	1	SA
....4	R2031	2007-000074	R-CHIP;100ohm,5%,1/10W,TP,1608	1	SA
....4	R2053	2007-000074	R-CHIP;100ohm,5%,1/10W,TP,1608	1	SA
....4	R2058	2007-000074	R-CHIP;100ohm,5%,1/10W,TP,1608	1	SA
....4	R2060	2007-000074	R-CHIP;100ohm,5%,1/10W,TP,1608	1	SA
....4	R2068	2007-000074	R-CHIP;100ohm,5%,1/10W,TP,1608	1	SA
....4	R2081	2007-000074	R-CHIP;100ohm,5%,1/10W,TP,1608	1	SA
....4	R2084	2007-000074	R-CHIP;100ohm,5%,1/10W,TP,1608	1	SA
....4	R2093	2007-000074	R-CHIP;100ohm,5%,1/10W,TP,1608	1	SA
....4	R3008	2007-000074	R-CHIP;100ohm,5%,1/10W,TP,1608	1	SA
....4	R3009	2007-000074	R-CHIP;100ohm,5%,1/10W,TP,1608	1	SA
....4	R3010	2007-000074	R-CHIP;100ohm,5%,1/10W,TP,1608	1	SA
....4	R3011	2007-000074	R-CHIP;100ohm,5%,1/10W,TP,1608	1	SA
....4	R3034	2007-000074	R-CHIP;100ohm,5%,1/10W,TP,1608	1	SA
....4	R3046	2007-000074	R-CHIP;100ohm,5%,1/10W,TP,1608	1	SA
....4	R3057	2007-000074	R-CHIP;100ohm,5%,1/10W,TP,1608	1	SA
....4	R3058	2007-000074	R-CHIP;100ohm,5%,1/10W,TP,1608	1	SA
....4	R3059	2007-000074	R-CHIP;100ohm,5%,1/10W,TP,1608	1	SA
....4	R3062	2007-000074	R-CHIP;100ohm,5%,1/10W,TP,1608	1	SA
....4	R3063	2007-000074	R-CHIP;100ohm,5%,1/10W,TP,1608	1	SA
....4	R3073	2007-000074	R-CHIP;100ohm,5%,1/10W,TP,1608	1	SA
....4	R3074	2007-000074	R-CHIP;100ohm,5%,1/10W,TP,1608	1	SA
....4	R3077	2007-000074	R-CHIP;100ohm,5%,1/10W,TP,1608	1	SA
....4	R3078	2007-000074	R-CHIP;100ohm,5%,1/10W,TP,1608	1	SA
....4	R3125	2007-000074	R-CHIP;100ohm,5%,1/10W,TP,1608	1	SA
....4	R3127	2007-000074	R-CHIP;100ohm,5%,1/10W,TP,1608	1	SA
....4	R3135	2007-000074	R-CHIP;100ohm,5%,1/10W,TP,1608	1	SA
....4	R4028	2007-000074	R-CHIP;100ohm,5%,1/10W,TP,1608	1	SA
....4	R4038	2007-000074	R-CHIP;100ohm,5%,1/10W,TP,1608	1	SA
....4	R4049	2007-000074	R-CHIP;100ohm,5%,1/10W,TP,1608	1	SA
....4	R4050	2007-000074	R-CHIP;100ohm,5%,1/10W,TP,1608	1	SA
....4	R4097	2007-000074	R-CHIP;100ohm,5%,1/10W,TP,1608	1	SA
....4	R4102	2007-000074	R-CHIP;100ohm,5%,1/10W,TP,1608	1	SA
....4	R4120	2007-000074	R-CHIP;100ohm,5%,1/10W,TP,1608	1	SA
....4	R5010	2007-000074	R-CHIP;100ohm,5%,1/10W,TP,1608	1	SA
....4	R5066	2007-000074	R-CHIP;100ohm,5%,1/10W,TP,1608	1	SA
....4	R5069	2007-000074	R-CHIP;100ohm,5%,1/10W,TP,1608	1	SA
....4	R4121	2007-000075	R-CHIP;220ohm,5%,1/10W,TP,1608	1	SA
....4	R2001	2007-000076	R-CHIP;330ohm,5%,1/10W,TP,1608	1	SA
....4	R2005	2007-000076	R-CHIP;330ohm,5%,1/10W,TP,1608	1	SA
....4	R2035	2007-000076	R-CHIP;330ohm,5%,1/10W,TP,1608	1	SA
....4	R2040	2007-000076	R-CHIP;330ohm,5%,1/10W,TP,1608	1	SA
....4	R1098	2007-000077	R-CHIP;470ohm,5%,1/10W,TP,1608	1	SA
....4	R2004	2007-000077	R-CHIP;470ohm,5%,1/10W,TP,1608	1	SA
....4	R2006	2007-000077	R-CHIP;470ohm,5%,1/10W,TP,1608	1	SA
....4	R2033	2007-000077	R-CHIP;470ohm,5%,1/10W,TP,1608	1	SA
....4	R2034	2007-000077	R-CHIP;470ohm,5%,1/10W,TP,1608	1	SA
....4	R2037	2007-000077	R-CHIP;470ohm,5%,1/10W,TP,1608	1	SA
....4	R2039	2007-000077	R-CHIP;470ohm,5%,1/10W,TP,1608	1	SA
....4	R2042	2007-000077	R-CHIP;470ohm,5%,1/10W,TP,1608	1	SA
....4	R2043	2007-000077	R-CHIP;470ohm,5%,1/10W,TP,1608	1	SA
....4	R2074	2007-000077	R-CHIP;470ohm,5%,1/10W,TP,1608	1	SA
....4	R2075	2007-000077	R-CHIP;470ohm,5%,1/10W,TP,1608	1	SA
....4	R2077	2007-000077	R-CHIP;470ohm,5%,1/10W,TP,1608	1	SA
....4	R2079	2007-000077	R-CHIP;470ohm,5%,1/10W,TP,1608	1	SA

ELECTRONIC SERVICE TIRGOVISTE

Level	Loc. No.	Code No.	Description & Specification	Q'ty	SA/SNA
....4	R3128	2007-000077	R-CHIP;470ohm,5%,1/10W,TP,1608	1	SA
....4	R3133	2007-000077	R-CHIP;470ohm,5%,1/10W,TP,1608	1	SA
....4	R4030	2007-000077	R-CHIP;470ohm,5%,1/10W,TP,1608	1	SA
....4	R4031	2007-000077	R-CHIP;470ohm,5%,1/10W,TP,1608	1	SA
....4	R4099	2007-000077	R-CHIP;470ohm,5%,1/10W,TP,1608	1	SA
....4	R5091	2007-000077	R-CHIP;470ohm,5%,1/10W,TP,1608	1	SA
....4	R5093	2007-000077	R-CHIP;470ohm,5%,1/10W,TP,1608	1	SA
....4	R1074	2007-000078	R-CHIP;1Kohm,5%,1/10W,TP,1608	1	SA
....4	R2009	2007-000078	R-CHIP;1Kohm,5%,1/10W,TP,1608	1	SA
....4	R2016	2007-000078	R-CHIP;1Kohm,5%,1/10W,TP,1608	1	SA
....4	R3001	2007-000078	R-CHIP;1Kohm,5%,1/10W,TP,1608	1	SA
....4	R3030	2007-000078	R-CHIP;1Kohm,5%,1/10W,TP,1608	1	SA
....4	R3121	2007-000078	R-CHIP;1Kohm,5%,1/10W,TP,1608	1	SA
....4	R3138	2007-000078	R-CHIP;1Kohm,5%,1/10W,TP,1608	1	SA
....4	R3139	2007-000078	R-CHIP;1Kohm,5%,1/10W,TP,1608	1	SA
....4	R4025	2007-000078	R-CHIP;1Kohm,5%,1/10W,TP,1608	1	SA
....4	R4026	2007-000078	R-CHIP;1Kohm,5%,1/10W,TP,1608	1	SA
....4	R4027	2007-000078	R-CHIP;1Kohm,5%,1/10W,TP,1608	1	SA
....4	R4034	2007-000078	R-CHIP;1Kohm,5%,1/10W,TP,1608	1	SA
....4	R4053	2007-000078	R-CHIP;1Kohm,5%,1/10W,TP,1608	1	SA
....4	R4096	2007-000078	R-CHIP;1Kohm,5%,1/10W,TP,1608	1	SA
....4	R4103	2007-000078	R-CHIP;1Kohm,5%,1/10W,TP,1608	1	SA
....4	R5043	2007-000078	R-CHIP;1Kohm,5%,1/10W,TP,1608	1	SA
....4	R3016	2007-000082	R-CHIP;3.3Kohm,5%,1/10W,TP,1608	1	SA
....4	R3017	2007-000082	R-CHIP;3.3Kohm,5%,1/10W,TP,1608	1	SA
....4	R3071	2007-000082	R-CHIP;3.3Kohm,5%,1/10W,TP,1608	1	SA
....4	R3072	2007-000082	R-CHIP;3.3Kohm,5%,1/10W,TP,1608	1	SA
....4	R4100	2007-000082	R-CHIP;3.3Kohm,5%,1/10W,TP,1608	1	SA
....4	R4101	2007-000082	R-CHIP;3.3Kohm,5%,1/10W,TP,1608	1	SA
....4	R1031	2007-000084	R-CHIP;4.7Kohm,5%,1/10W,TP,1608	1	SA
....4	R1035	2007-000084	R-CHIP;4.7Kohm,5%,1/10W,TP,1608	1	SA
....4	R1058	2007-000084	R-CHIP;4.7Kohm,5%,1/10W,TP,1608	1	SA
....4	R1060	2007-000084	R-CHIP;4.7Kohm,5%,1/10W,TP,1608	1	SA
....4	R1082	2007-000084	R-CHIP;4.7Kohm,5%,1/10W,TP,1608	1	SA
....4	R3002	2007-000084	R-CHIP;4.7Kohm,5%,1/10W,TP,1608	1	SA
....4	R3014	2007-000084	R-CHIP;4.7Kohm,5%,1/10W,TP,1608	1	SA
....4	R3015	2007-000084	R-CHIP;4.7Kohm,5%,1/10W,TP,1608	1	SA
....4	R3018	2007-000084	R-CHIP;4.7Kohm,5%,1/10W,TP,1608	1	SA
....4	R3020	2007-000084	R-CHIP;4.7Kohm,5%,1/10W,TP,1608	1	SA
....4	R3021	2007-000084	R-CHIP;4.7Kohm,5%,1/10W,TP,1608	1	SA
....4	R3022	2007-000084	R-CHIP;4.7Kohm,5%,1/10W,TP,1608	1	SA
....4	R3036	2007-000084	R-CHIP;4.7Kohm,5%,1/10W,TP,1608	1	SA
....4	R3038	2007-000084	R-CHIP;4.7Kohm,5%,1/10W,TP,1608	1	SA
....4	R3070	2007-000084	R-CHIP;4.7Kohm,5%,1/10W,TP,1608	1	SA
....4	R3079	2007-000084	R-CHIP;4.7Kohm,5%,1/10W,TP,1608	1	SA
....4	R3080	2007-000084	R-CHIP;4.7Kohm,5%,1/10W,TP,1608	1	SA
....4	R3081	2007-000084	R-CHIP;4.7Kohm,5%,1/10W,TP,1608	1	SA
....4	R3082	2007-000084	R-CHIP;4.7Kohm,5%,1/10W,TP,1608	1	SA
....4	R3086	2007-000084	R-CHIP;4.7Kohm,5%,1/10W,TP,1608	1	SA
....4	R3087	2007-000084	R-CHIP;4.7Kohm,5%,1/10W,TP,1608	1	SA
....4	R3108	2007-000084	R-CHIP;4.7Kohm,5%,1/10W,TP,1608	1	SA
....4	R3109	2007-000084	R-CHIP;4.7Kohm,5%,1/10W,TP,1608	1	SA
....4	R3110	2007-000084	R-CHIP;4.7Kohm,5%,1/10W,TP,1608	1	SA
....4	R3111	2007-000084	R-CHIP;4.7Kohm,5%,1/10W,TP,1608	1	SA
....4	R3112	2007-000084	R-CHIP;4.7Kohm,5%,1/10W,TP,1608	1	SA
....4	R3113	2007-000084	R-CHIP;4.7Kohm,5%,1/10W,TP,1608	1	SA
....4	R3114	2007-000084	R-CHIP;4.7Kohm,5%,1/10W,TP,1608	1	SA
....4	R3116	2007-000084	R-CHIP;4.7Kohm,5%,1/10W,TP,1608	1	SA
....4	R3129	2007-000084	R-CHIP;4.7Kohm,5%,1/10W,TP,1608	1	SA
....4	R3134	2007-000084	R-CHIP;4.7Kohm,5%,1/10W,TP,1608	1	SA

ELECTRONIC SERVICE TARGOVISTE

Level	Loc. No.	Code No.	Description & Specification	Q'ty	SA/SNA
....4	R3137	2007-000084	R-CHIP;4.7Kohm,5%,1/10W,TP,1608	1	SA
....4	R4036	2007-000084	R-CHIP;4.7Kohm,5%,1/10W,TP,1608	1	SA
....4	R4037	2007-000084	R-CHIP;4.7Kohm,5%,1/10W,TP,1608	1	SA
....4	R4098	2007-000084	R-CHIP;4.7Kohm,5%,1/10W,TP,1608	1	SA
....4	R4123	2007-000084	R-CHIP;4.7Kohm,5%,1/10W,TP,1608	1	SA
....4	R5064	2007-000084	R-CHIP;4.7Kohm,5%,1/10W,TP,1608	1	SA
....4	R5119	2007-000084	R-CHIP;4.7Kohm,5%,1/10W,TP,1608	1	SA
....4	R2028	2007-000087	R-CHIP;6.8Kohm,5%,1/10W,TP,1608	1	SA
....4	R2061	2007-000087	R-CHIP;6.8Kohm,5%,1/10W,TP,1608	1	SA
....4	R1015	2007-000090	R-CHIP;10Kohm,5%,1/10W,TP,1608	1	SA
....4	R1016	2007-000090	R-CHIP;10Kohm,5%,1/10W,TP,1608	1	SA
....4	R1038	2007-000090	R-CHIP;10Kohm,5%,1/10W,TP,1608	1	SA
....4	R1039	2007-000090	R-CHIP;10Kohm,5%,1/10W,TP,1608	1	SA
....4	R1041	2007-000090	R-CHIP;10Kohm,5%,1/10W,TP,1608	1	SA
....4	R1051	2007-000090	R-CHIP;10Kohm,5%,1/10W,TP,1608	1	SA
....4	R1067	2007-000090	R-CHIP;10Kohm,5%,1/10W,TP,1608	1	SA
....4	R1080	2007-000090	R-CHIP;10Kohm,5%,1/10W,TP,1608	1	SA
....4	R1101	2007-000090	R-CHIP;10Kohm,5%,1/10W,TP,1608	1	SA
....4	R1102	2007-000090	R-CHIP;10Kohm,5%,1/10W,TP,1608	1	SA
....4	R1103	2007-000090	R-CHIP;10Kohm,5%,1/10W,TP,1608	1	SA
....4	R1104	2007-000090	R-CHIP;10Kohm,5%,1/10W,TP,1608	1	SA
....4	R1105	2007-000090	R-CHIP;10Kohm,5%,1/10W,TP,1608	1	SA
....4	R2002	2007-000090	R-CHIP;10Kohm,5%,1/10W,TP,1608	1	SA
....4	R2003	2007-000090	R-CHIP;10Kohm,5%,1/10W,TP,1608	1	SA
....4	R2013	2007-000090	R-CHIP;10Kohm,5%,1/10W,TP,1608	1	SA
....4	R2044	2007-000090	R-CHIP;10Kohm,5%,1/10W,TP,1608	1	SA
....4	R2045	2007-000090	R-CHIP;10Kohm,5%,1/10W,TP,1608	1	SA
....4	R2057	2007-000090	R-CHIP;10Kohm,5%,1/10W,TP,1608	1	SA
....4	R2065	2007-000090	R-CHIP;10Kohm,5%,1/10W,TP,1608	1	SA
....4	R3005	2007-000090	R-CHIP;10Kohm,5%,1/10W,TP,1608	1	SA
....4	R3006	2007-000090	R-CHIP;10Kohm,5%,1/10W,TP,1608	1	SA
....4	R3007	2007-000090	R-CHIP;10Kohm,5%,1/10W,TP,1608	1	SA
....4	R3075	2007-000090	R-CHIP;10Kohm,5%,1/10W,TP,1608	1	SA
....4	R3076	2007-000090	R-CHIP;10Kohm,5%,1/10W,TP,1608	1	SA
....4	R3083	2007-000090	R-CHIP;10Kohm,5%,1/10W,TP,1608	1	SA
....4	R3084	2007-000090	R-CHIP;10Kohm,5%,1/10W,TP,1608	1	SA
....4	R3085	2007-000090	R-CHIP;10Kohm,5%,1/10W,TP,1608	1	SA
....4	R3131	2007-000090	R-CHIP;10Kohm,5%,1/10W,TP,1608	1	SA
....4	R3140	2007-000090	R-CHIP;10Kohm,5%,1/10W,TP,1608	1	SA
....4	R4118	2007-000090	R-CHIP;10Kohm,5%,1/10W,TP,1608	1	SA
....4	R4119	2007-000090	R-CHIP;10Kohm,5%,1/10W,TP,1608	1	SA
....4	R5004	2007-000090	R-CHIP;10Kohm,5%,1/10W,TP,1608	1	SA
....4	R5044	2007-000090	R-CHIP;10Kohm,5%,1/10W,TP,1608	1	SA
....4	R1070	2007-000093	R-CHIP;20Kohm,5%,1/10W,TP,1608	1	SA
....4	R1071	2007-000093	R-CHIP;20Kohm,5%,1/10W,TP,1608	1	SA
....4	R3004	2007-000094	R-CHIP;22Kohm,5%,1/10W,TP,1608	1	SA
....4	R1062	2007-000097	R-CHIP;47Kohm,5%,1/10W,TP,1608	1	SA
....4	R1068	2007-000097	R-CHIP;47Kohm,5%,1/10W,TP,1608	1	SA
....4	R1075	2007-000097	R-CHIP;47Kohm,5%,1/10W,TP,1608	1	SA
....4	R1079	2007-000097	R-CHIP;47Kohm,5%,1/10W,TP,1608	1	SA
....4	R2010	2007-000097	R-CHIP;47Kohm,5%,1/10W,TP,1608	1	SA
....4	R2011	2007-000097	R-CHIP;47Kohm,5%,1/10W,TP,1608	1	SA
....4	R2012	2007-000097	R-CHIP;47Kohm,5%,1/10W,TP,1608	1	SA
....4	R3099	2007-000097	R-CHIP;47Kohm,5%,1/10W,TP,1608	1	SA
....4	R1001	2007-000100	R-CHIP;68Kohm,5%,1/10W,TP,1608	1	SA
....4	R1002	2007-000100	R-CHIP;68Kohm,5%,1/10W,TP,1608	1	SA
....4	R1003	2007-000100	R-CHIP;68Kohm,5%,1/10W,TP,1608	1	SA
....4	R1004	2007-000100	R-CHIP;68Kohm,5%,1/10W,TP,1608	1	SA
....4	R1005	2007-000100	R-CHIP;68Kohm,5%,1/10W,TP,1608	1	SA
....4	R1006	2007-000100	R-CHIP;68Kohm,5%,1/10W,TP,1608	1	SA

ELECTRONIC SERVICE TIRGOVISTE

Level	Loc. No.	Code No.	Description & Specification	Q'ty	SA/SNA
....4	R1007	2007-000100	R-CHIP;68Kohm,5%,1/10W,TP,1608	1	SA
....4	R1008	2007-000100	R-CHIP;68Kohm,5%,1/10W,TP,1608	1	SA
....4	R1019	2007-000100	R-CHIP;68Kohm,5%,1/10W,TP,1608	1	SA
....4	R1020	2007-000100	R-CHIP;68Kohm,5%,1/10W,TP,1608	1	SA
....4	R1021	2007-000100	R-CHIP;68Kohm,5%,1/10W,TP,1608	1	SA
....4	R1022	2007-000100	R-CHIP;68Kohm,5%,1/10W,TP,1608	1	SA
....4	R1023	2007-000100	R-CHIP;68Kohm,5%,1/10W,TP,1608	1	SA
....4	R1024	2007-000100	R-CHIP;68Kohm,5%,1/10W,TP,1608	1	SA
....4	R1025	2007-000100	R-CHIP;68Kohm,5%,1/10W,TP,1608	1	SA
....4	R1026	2007-000100	R-CHIP;68Kohm,5%,1/10W,TP,1608	1	SA
....4	R1027	2007-000100	R-CHIP;68Kohm,5%,1/10W,TP,1608	1	SA
....4	R1028	2007-000100	R-CHIP;68Kohm,5%,1/10W,TP,1608	1	SA
....4	R1029	2007-000100	R-CHIP;68Kohm,5%,1/10W,TP,1608	1	SA
....4	R1030	2007-000100	R-CHIP;68Kohm,5%,1/10W,TP,1608	1	SA
....4	R1043	2007-000100	R-CHIP;68Kohm,5%,1/10W,TP,1608	1	SA
....4	R1044	2007-000100	R-CHIP;68Kohm,5%,1/10W,TP,1608	1	SA
....4	R1045	2007-000100	R-CHIP;68Kohm,5%,1/10W,TP,1608	1	SA
....4	R1046	2007-000100	R-CHIP;68Kohm,5%,1/10W,TP,1608	1	SA
....4	R1034	2007-000102	R-CHIP;100Kohm,5%,1/10W,TP,1608	1	SA
....4	R1064	2007-000102	R-CHIP;100Kohm,5%,1/10W,TP,1608	1	SA
....4	R1065	2007-000102	R-CHIP;100Kohm,5%,1/10W,TP,1608	1	SA
....4	R1069	2007-000102	R-CHIP;100Kohm,5%,1/10W,TP,1608	1	SA
....4	R1072	2007-000102	R-CHIP;100Kohm,5%,1/10W,TP,1608	1	SA
....4	R1073	2007-000107	R-CHIP;470Kohm,5%,1/10W,TP,1608	1	SA
....4	R4021	2007-000113	R-CHIP;33ohm,5%,1/10W,TP,1608	1	SA
....4	R4022	2007-000113	R-CHIP;33ohm,5%,1/10W,TP,1608	1	SA
....4	R4023	2007-000113	R-CHIP;33ohm,5%,1/10W,TP,1608	1	SA
....4	R4024	2007-000113	R-CHIP;33ohm,5%,1/10W,TP,1608	1	SA
....4	R1036	2007-000119	R-CHIP;560ohm,5%,1/10W,TP,1608	1	SA
....4	R1078	2007-000122	R-CHIP;1.2Kohm,5%,1/10W,TP,1608	1	SA
....4	R5053	2007-000123	R-CHIP;1.5Kohm,5%,1/10W,TP,1608	1	SA
....4	R5054	2007-000123	R-CHIP;1.5Kohm,5%,1/10W,TP,1608	1	SA
....4	R5055	2007-000123	R-CHIP;1.5Kohm,5%,1/10W,TP,1608	1	SA
....4	R1096	2007-000125	R-CHIP;3.9Kohm,5%,1/10W,TP,1608	1	SA
....4	R1076	2007-000129	R-CHIP;27Kohm,5%,1/10W,TP,1608	1	SA
....4	R5015	2007-000133	R-CHIP;330Kohm,5%,1/10W,TP,1608	1	SA
....4	R2119	2007-000287	R-CHIP;100OHM,1%,1/10W,TP,1608	1	SA
....4	R2098	2007-000309	R-CHIP;10ohm,5%,1/10W,TP,1608	1	SA
....4	R2099	2007-000309	R-CHIP;10ohm,5%,1/10W,TP,1608	1	SA
....4	R2100	2007-000309	R-CHIP;10ohm,5%,1/10W,TP,1608	1	SA
....4	R2101	2007-000309	R-CHIP;10ohm,5%,1/10W,TP,1608	1	SA
....4	R2102	2007-000309	R-CHIP;10ohm,5%,1/10W,TP,1608	1	SA
....4	R2103	2007-000309	R-CHIP;10ohm,5%,1/10W,TP,1608	1	SA
....4	R2104	2007-000309	R-CHIP;10ohm,5%,1/10W,TP,1608	1	SA
....4	R2105	2007-000309	R-CHIP;10ohm,5%,1/10W,TP,1608	1	SA
....4	R3044	2007-000309	R-CHIP;10ohm,5%,1/10W,TP,1608	1	SA
....4	R3048	2007-000309	R-CHIP;10ohm,5%,1/10W,TP,1608	1	SA
....4	R3049_1M	2007-000309	R-CHIP;10ohm,5%,1/10W,TP,1608	1	SA
....4	R3050_1M	2007-000309	R-CHIP;10ohm,5%,1/10W,TP,1608	1	SA
....4	R3056	2007-000309	R-CHIP;10ohm,5%,1/10W,TP,1608	1	SA
....4	R3060	2007-000309	R-CHIP;10ohm,5%,1/10W,TP,1608	1	SA
....4	R3061	2007-000309	R-CHIP;10ohm,5%,1/10W,TP,1608	1	SA
....4	R3064	2007-000309	R-CHIP;10ohm,5%,1/10W,TP,1608	1	SA
....4	R3066	2007-000309	R-CHIP;10ohm,5%,1/10W,TP,1608	1	SA
....4	R3067	2007-000309	R-CHIP;10ohm,5%,1/10W,TP,1608	1	SA
....4	R3068	2007-000309	R-CHIP;10ohm,5%,1/10W,TP,1608	1	SA
....4	R3069	2007-000309	R-CHIP;10ohm,5%,1/10W,TP,1608	1	SA
....4	R3091	2007-000309	R-CHIP;10ohm,5%,1/10W,TP,1608	1	SA
....4	R3092	2007-000309	R-CHIP;10ohm,5%,1/10W,TP,1608	1	SA
....4	R3093	2007-000309	R-CHIP;10ohm,5%,1/10W,TP,1608	1	SA

ELECTRONIC SERVICE TIRGOVISTE

Level	Loc. No.	Code No.	Description & Specification	Q'ty	SA/SNA
....4	R3094	2007-000309	R-CHIP;10ohm,5%,1/10W,TP,1608	1	SA
....4	R3095	2007-000309	R-CHIP;10ohm,5%,1/10W,TP,1608	1	SA
....4	R3096	2007-000309	R-CHIP;10ohm,5%,1/10W,TP,1608	1	SA
....4	R3097	2007-000309	R-CHIP;10ohm,5%,1/10W,TP,1608	1	SA
....4	R3098	2007-000309	R-CHIP;10ohm,5%,1/10W,TP,1608	1	SA
....4	R5045	2007-000309	R-CHIP;10ohm,5%,1/10W,TP,1608	1	SA
....4	R5046	2007-000309	R-CHIP;10ohm,5%,1/10W,TP,1608	1	SA
....4	R5047	2007-000309	R-CHIP;10ohm,5%,1/10W,TP,1608	1	SA
....4	R2017	2007-000458	R-CHIP;18Kohm,5%,1/10W,TP,1608	1	SA
....4	R2052	2007-000458	R-CHIP;18Kohm,5%,1/10W,TP,1608	1	SA
....4	R3012	2007-000704	R-CHIP;3.6Kohm,5%,1/10W,TP,1608	1	SA
....4	R3013	2007-000704	R-CHIP;3.6Kohm,5%,1/10W,TP,1608	1	SA
....4	R1077	2007-000708	R-CHIP;3.9Kohm,1%,1/10W,TP,1608	1	SA
....4	R4122	2007-000903	R-CHIP;430ohm,1%,1/10W,TP,1608	1	SA
....4	R2019	2007-000950	R-CHIP;47ohm,5%,1/4W,TP,3216	1	SA
....4	R2020	2007-000950	R-CHIP;47ohm,5%,1/4W,TP,3216	1	SA
....4	R2021	2007-000950	R-CHIP;47ohm,5%,1/4W,TP,3216	1	SA
....4	R2066	2007-000950	R-CHIP;47ohm,5%,1/4W,TP,3216	1	SA
....4	R2067	2007-000950	R-CHIP;47ohm,5%,1/4W,TP,3216	1	SA
....4	R2076	2007-000950	R-CHIP;47ohm,5%,1/4W,TP,3216	1	SA
....4	R2078	2007-000950	R-CHIP;47ohm,5%,1/4W,TP,3216	1	SA
....4	R2082	2007-000950	R-CHIP;47ohm,5%,1/4W,TP,3216	1	SA
....4	R2083	2007-000950	R-CHIP;47ohm,5%,1/4W,TP,3216	1	SA
....4	R2094	2007-000950	R-CHIP;47ohm,5%,1/4W,TP,3216	1	SA
....4	R2095	2007-000950	R-CHIP;47ohm,5%,1/4W,TP,3216	1	SA
....4	R5035	2007-001014	R-CHIP;51OHM,5%,1/10W,TP,1608	1	SA
....4	R5039	2007-001014	R-CHIP;51OHM,5%,1/10W,TP,1608	1	SA
....4	R2030	2007-001131	R-CHIP;68ohm,1%,1/10W,TP,1608	1	SA
....4	R2056	2007-001131	R-CHIP;68ohm,1%,1/10W,TP,1608	1	SA
....4	R2014	2007-001164	R-CHIP;75ohm,1%,1/10W,TP,1608	1	SA
....4	R2015	2007-001164	R-CHIP;75ohm,1%,1/10W,TP,1608	1	SA
....4	R2025	2007-001164	R-CHIP;75ohm,1%,1/10W,TP,1608	1	SA
....4	R2026	2007-001164	R-CHIP;75ohm,1%,1/10W,TP,1608	1	SA
....4	R2027	2007-001164	R-CHIP;75ohm,1%,1/10W,TP,1608	1	SA
....4	R2032	2007-001164	R-CHIP;75ohm,1%,1/10W,TP,1608	1	SA
....4	R2062	2007-001164	R-CHIP;75ohm,1%,1/10W,TP,1608	1	SA
....4	R2085	2007-001164	R-CHIP;75ohm,1%,1/10W,TP,1608	1	SA
....4	R2086	2007-001164	R-CHIP;75ohm,1%,1/10W,TP,1608	1	SA
....4	R2087	2007-001164	R-CHIP;75ohm,1%,1/10W,TP,1608	1	SA
....4	R2036	2007-001167	R-CHIP;75ohm,5%,1/10W,TP,1608	1	SA
....4	R2038	2007-001167	R-CHIP;75ohm,5%,1/10W,TP,1608	1	SA
....4	R2041	2007-001167	R-CHIP;75ohm,5%,1/10W,TP,1608	1	SA
....4	R2046	2007-001167	R-CHIP;75ohm,5%,1/10W,TP,1608	1	SA
....4	R2047	2007-001167	R-CHIP;75ohm,5%,1/10W,TP,1608	1	SA
....4	R2048	2007-001167	R-CHIP;75ohm,5%,1/10W,TP,1608	1	SA
....4	R2054	2007-001167	R-CHIP;75ohm,5%,1/10W,TP,1608	1	SA
....4	R2059	2007-001167	R-CHIP;75ohm,5%,1/10W,TP,1608	1	SA
....4	R5016	2007-001167	R-CHIP;75ohm,5%,1/10W,TP,1608	1	SA
....4	R1057	2007-007299	R-CHIP;6.81Kohm,1%,1/10W,TP,1608	1	SA
....4	R2118	2007-007733	R-CHIP;51ohm,1%,1/10W,TP,1608	1	SA
....4	R1083	2007-008720	R-CHIP;4.7ohm,1%,1/4W,TP,3216	1	SA
....4	R1088	2007-008720	R-CHIP;4.7ohm,1%,1/4W,TP,3216	1	SA
....4	R1094	2007-008720	R-CHIP;4.7ohm,1%,1/4W,TP,3216	1	SA
....4	R1097	2007-008720	R-CHIP;4.7ohm,1%,1/4W,TP,3216	1	SA
....4	RA5001	2011-000585	R-NET;47ohm,5%,1/16W,L,CHIP,8P,TP,3.2x1.	1	SA
....4	RA5002	2011-000585	R-NET;47ohm,5%,1/16W,L,CHIP,8P,TP,3.2x1.	1	SA
....4	RA5003	2011-000585	R-NET;47ohm,5%,1/16W,L,CHIP,8P,TP,3.2x1.	1	SA
....4	RA5004	2011-000585	R-NET;47ohm,5%,1/16W,L,CHIP,8P,TP,3.2x1.	1	SA
....4	RA5005	2011-000585	R-NET;47ohm,5%,1/16W,L,CHIP,8P,TP,3.2x1.	1	SA
....4	RA5006	2011-000585	R-NET;47ohm,5%,1/16W,L,CHIP,8P,TP,3.2x1.	1	SA

ELECTRONIC SERVICE TIRGOVISTE

Level	Loc. No.	Code No.	Description & Specification	Q'ty	SA/SNA
....4	RA5007	2011-000585	R-NET;47ohm,5%,1/16W,L,CHIP,8P,TP,3.2x1.	1	SA
....4	RA5010	2011-000585	R-NET;47ohm,5%,1/16W,L,CHIP,8P,TP,3.2x1.	1	SA
....4	RA3004	2011-000651	R-NET;10ohm,5%,1/16W,L,CHIP,8P,TP,3216	1	SA
....4	RA3005	2011-000651	R-NET;10ohm,5%,1/16W,L,CHIP,8P,TP,3216	1	SA
....4	RA3007	2011-000651	R-NET;10ohm,5%,1/16W,L,CHIP,8P,TP,3216	1	SA
....4	RA3008	2011-000651	R-NET;10ohm,5%,1/16W,L,CHIP,8P,TP,3216	1	SA
....4	RA3009	2011-000651	R-NET;10ohm,5%,1/16W,L,CHIP,8P,TP,3216	1	SA
....4	RA3011	2011-000651	R-NET;10ohm,5%,1/16W,L,CHIP,8P,TP,3216	1	SA
....4	RA3001	2011-001093	R-NET;100OHM,5%,1/16W,L,CHIP,8P,TP,3216	1	SA
....4	RA3002	2011-001093	R-NET;100OHM,5%,1/16W,L,CHIP,8P,TP,3216	1	SA
....4	RA3003	2011-001093	R-NET;100OHM,5%,1/16W,L,CHIP,8P,TP,3216	1	SA
....4	RA3006	2011-001093	R-NET;100OHM,5%,1/16W,L,CHIP,8P,TP,3216	1	SA
....4	RA3010	2011-001093	R-NET;100OHM,5%,1/16W,L,CHIP,8P,TP,3216	1	SA
....4	RA3012	2011-001093	R-NET;100OHM,5%,1/16W,L,CHIP,8P,TP,3216	1	SA
....4	RA3013	2011-001093	R-NET;100OHM,5%,1/16W,L,CHIP,8P,TP,3216	1	SA
....4	RA3014	2011-001093	R-NET;100OHM,5%,1/16W,L,CHIP,8P,TP,3216	1	SA
....4	RA3015	2011-001093	R-NET;100OHM,5%,1/16W,L,CHIP,8P,TP,3216	1	SA
....4	RA3016	2011-001093	R-NET;100OHM,5%,1/16W,L,CHIP,8P,TP,3216	1	SA
....4	RA3017	2011-001093	R-NET;100OHM,5%,1/16W,L,CHIP,8P,TP,3216	1	SA
....4	RA3018	2011-001093	R-NET;100OHM,5%,1/16W,L,CHIP,8P,TP,3216	1	SA
....4	RA3019	2011-001093	R-NET;100OHM,5%,1/16W,L,CHIP,8P,TP,3216	1	SA
....4	RA3020	2011-001093	R-NET;100OHM,5%,1/16W,L,CHIP,8P,TP,3216	1	SA
....4	RA4001	2011-001093	R-NET;100OHM,5%,1/16W,L,CHIP,8P,TP,3216	1	SA
....4	RA4002	2011-001093	R-NET;100OHM,5%,1/16W,L,CHIP,8P,TP,3216	1	SA
....4	C1158	2203-000125	C-CER,CHIP;1.2nF,10%,50V,X7R,TP,1608,-	1	SA
....4	C1037	2203-000140	C-CER,CHIP;1.5nF,10%,50V,X7R,1608	1	SA
....4	C1062	2203-000140	C-CER,CHIP;1.5nF,10%,50V,X7R,1608	1	SA
....4	C1004	2203-000189	C-CER,CHIP;100nF,+80-20%,25V,Y5V,1608	1	SA
....4	C1006	2203-000189	C-CER,CHIP;100nF,+80-20%,25V,Y5V,1608	1	SA
....4	C1008	2203-000189	C-CER,CHIP;100nF,+80-20%,25V,Y5V,1608	1	SA
....4	C1016	2203-000189	C-CER,CHIP;100nF,+80-20%,25V,Y5V,1608	1	SA
....4	C1021	2203-000189	C-CER,CHIP;100nF,+80-20%,25V,Y5V,1608	1	SA
....4	C1025	2203-000189	C-CER,CHIP;100nF,+80-20%,25V,Y5V,1608	1	SA
....4	C1027	2203-000189	C-CER,CHIP;100nF,+80-20%,25V,Y5V,1608	1	SA
....4	C1043	2203-000189	C-CER,CHIP;100nF,+80-20%,25V,Y5V,1608	1	SA
....4	C1046	2203-000189	C-CER,CHIP;100nF,+80-20%,25V,Y5V,1608	1	SA
....4	C1052	2203-000189	C-CER,CHIP;100nF,+80-20%,25V,Y5V,1608	1	SA
....4	C1053	2203-000189	C-CER,CHIP;100nF,+80-20%,25V,Y5V,1608	1	SA
....4	C1054	2203-000189	C-CER,CHIP;100nF,+80-20%,25V,Y5V,1608	1	SA
....4	C1055	2203-000189	C-CER,CHIP;100nF,+80-20%,25V,Y5V,1608	1	SA
....4	C1075	2203-000189	C-CER,CHIP;100nF,+80-20%,25V,Y5V,1608	1	SA
....4	C1084	2203-000189	C-CER,CHIP;100nF,+80-20%,25V,Y5V,1608	1	SA
....4	C1086	2203-000189	C-CER,CHIP;100nF,+80-20%,25V,Y5V,1608	1	SA
....4	C1087	2203-000189	C-CER,CHIP;100nF,+80-20%,25V,Y5V,1608	1	SA
....4	C1097	2203-000189	C-CER,CHIP;100nF,+80-20%,25V,Y5V,1608	1	SA
....4	C1098	2203-000189	C-CER,CHIP;100nF,+80-20%,25V,Y5V,1608	1	SA
....4	C1103	2203-000189	C-CER,CHIP;100nF,+80-20%,25V,Y5V,1608	1	SA
....4	C1105	2203-000189	C-CER,CHIP;100nF,+80-20%,25V,Y5V,1608	1	SA
....4	C1109	2203-000189	C-CER,CHIP;100nF,+80-20%,25V,Y5V,1608	1	SA
....4	C1124	2203-000189	C-CER,CHIP;100nF,+80-20%,25V,Y5V,1608	1	SA
....4	C1132	2203-000189	C-CER,CHIP;100nF,+80-20%,25V,Y5V,1608	1	SA
....4	C1133	2203-000189	C-CER,CHIP;100nF,+80-20%,25V,Y5V,1608	1	SA
....4	C1141	2203-000189	C-CER,CHIP;100nF,+80-20%,25V,Y5V,1608	1	SA
....4	C1159	2203-000189	C-CER,CHIP;100nF,+80-20%,25V,Y5V,1608	1	SA
....4	C1168	2203-000189	C-CER,CHIP;100nF,+80-20%,25V,Y5V,1608	1	SA
....4	C2002	2203-000189	C-CER,CHIP;100nF,+80-20%,25V,Y5V,1608	1	SA
....4	C2018	2203-000189	C-CER,CHIP;100nF,+80-20%,25V,Y5V,1608	1	SA
....4	C3001	2203-000189	C-CER,CHIP;100nF,+80-20%,25V,Y5V,1608	1	SA
....4	C3005	2203-000189	C-CER,CHIP;100nF,+80-20%,25V,Y5V,1608	1	SA
....4	C3034	2203-000189	C-CER,CHIP;100nF,+80-20%,25V,Y5V,1608	1	SA

ELECTRONIC SERVICE TIRGOVISTE

Level	Loc. No.	Code No.	Description & Specification	Q'ty	SA/SNA
....4	C4016	2203-000189	C-CER,CHIP;100nF,+80-20%,25V,Y5V,1608	1	SA
....4	C4017	2203-000189	C-CER,CHIP;100nF,+80-20%,25V,Y5V,1608	1	SA
....4	C4018	2203-000189	C-CER,CHIP;100nF,+80-20%,25V,Y5V,1608	1	SA
....4	C4019	2203-000189	C-CER,CHIP;100nF,+80-20%,25V,Y5V,1608	1	SA
....4	C4020	2203-000189	C-CER,CHIP;100nF,+80-20%,25V,Y5V,1608	1	SA
....4	C4021	2203-000189	C-CER,CHIP;100nF,+80-20%,25V,Y5V,1608	1	SA
....4	C4022	2203-000189	C-CER,CHIP;100nF,+80-20%,25V,Y5V,1608	1	SA
....4	C4025	2203-000189	C-CER,CHIP;100nF,+80-20%,25V,Y5V,1608	1	SA
....4	C4026	2203-000189	C-CER,CHIP;100nF,+80-20%,25V,Y5V,1608	1	SA
....4	C4027	2203-000189	C-CER,CHIP;100nF,+80-20%,25V,Y5V,1608	1	SA
....4	C4028	2203-000189	C-CER,CHIP;100nF,+80-20%,25V,Y5V,1608	1	SA
....4	C4029	2203-000189	C-CER,CHIP;100nF,+80-20%,25V,Y5V,1608	1	SA
....4	C4031	2203-000189	C-CER,CHIP;100nF,+80-20%,25V,Y5V,1608	1	SA
....4	C4032	2203-000189	C-CER,CHIP;100nF,+80-20%,25V,Y5V,1608	1	SA
....4	C4034	2203-000189	C-CER,CHIP;100nF,+80-20%,25V,Y5V,1608	1	SA
....4	C4035	2203-000189	C-CER,CHIP;100nF,+80-20%,25V,Y5V,1608	1	SA
....4	C4036	2203-000189	C-CER,CHIP;100nF,+80-20%,25V,Y5V,1608	1	SA
....4	C4038	2203-000189	C-CER,CHIP;100nF,+80-20%,25V,Y5V,1608	1	SA
....4	C4039	2203-000189	C-CER,CHIP;100nF,+80-20%,25V,Y5V,1608	1	SA
....4	C4040	2203-000189	C-CER,CHIP;100nF,+80-20%,25V,Y5V,1608	1	SA
....4	C4041	2203-000189	C-CER,CHIP;100nF,+80-20%,25V,Y5V,1608	1	SA
....4	C4042	2203-000189	C-CER,CHIP;100nF,+80-20%,25V,Y5V,1608	1	SA
....4	C4043	2203-000189	C-CER,CHIP;100nF,+80-20%,25V,Y5V,1608	1	SA
....4	C4045	2203-000189	C-CER,CHIP;100nF,+80-20%,25V,Y5V,1608	1	SA
....4	C4046	2203-000189	C-CER,CHIP;100nF,+80-20%,25V,Y5V,1608	1	SA
....4	C4048	2203-000189	C-CER,CHIP;100nF,+80-20%,25V,Y5V,1608	1	SA
....4	C4049	2203-000189	C-CER,CHIP;100nF,+80-20%,25V,Y5V,1608	1	SA
....4	C4052	2203-000189	C-CER,CHIP;100nF,+80-20%,25V,Y5V,1608	1	SA
....4	C4053	2203-000189	C-CER,CHIP;100nF,+80-20%,25V,Y5V,1608	1	SA
....4	C4054	2203-000189	C-CER,CHIP;100nF,+80-20%,25V,Y5V,1608	1	SA
....4	C4055	2203-000189	C-CER,CHIP;100nF,+80-20%,25V,Y5V,1608	1	SA
....4	C4056	2203-000189	C-CER,CHIP;100nF,+80-20%,25V,Y5V,1608	1	SA
....4	C4059	2203-000189	C-CER,CHIP;100nF,+80-20%,25V,Y5V,1608	1	SA
....4	C4060	2203-000189	C-CER,CHIP;100nF,+80-20%,25V,Y5V,1608	1	SA
....4	C4061	2203-000189	C-CER,CHIP;100nF,+80-20%,25V,Y5V,1608	1	SA
....4	C4062	2203-000189	C-CER,CHIP;100nF,+80-20%,25V,Y5V,1608	1	SA
....4	C4063	2203-000189	C-CER,CHIP;100nF,+80-20%,25V,Y5V,1608	1	SA
....4	C4067	2203-000189	C-CER,CHIP;100nF,+80-20%,25V,Y5V,1608	1	SA
....4	C4068	2203-000189	C-CER,CHIP;100nF,+80-20%,25V,Y5V,1608	1	SA
....4	C4069	2203-000189	C-CER,CHIP;100nF,+80-20%,25V,Y5V,1608	1	SA
....4	C4070	2203-000189	C-CER,CHIP;100nF,+80-20%,25V,Y5V,1608	1	SA
....4	C4071	2203-000189	C-CER,CHIP;100nF,+80-20%,25V,Y5V,1608	1	SA
....4	C4073	2203-000189	C-CER,CHIP;100nF,+80-20%,25V,Y5V,1608	1	SA
....4	C4076	2203-000189	C-CER,CHIP;100nF,+80-20%,25V,Y5V,1608	1	SA
....4	C4077	2203-000189	C-CER,CHIP;100nF,+80-20%,25V,Y5V,1608	1	SA
....4	C4080	2203-000189	C-CER,CHIP;100nF,+80-20%,25V,Y5V,1608	1	SA
....4	C4081	2203-000189	C-CER,CHIP;100nF,+80-20%,25V,Y5V,1608	1	SA
....4	C4083	2203-000189	C-CER,CHIP;100nF,+80-20%,25V,Y5V,1608	1	SA
....4	C4084	2203-000189	C-CER,CHIP;100nF,+80-20%,25V,Y5V,1608	1	SA
....4	C4085	2203-000189	C-CER,CHIP;100nF,+80-20%,25V,Y5V,1608	1	SA
....4	C4086	2203-000189	C-CER,CHIP;100nF,+80-20%,25V,Y5V,1608	1	SA
....4	C4095	2203-000189	C-CER,CHIP;100nF,+80-20%,25V,Y5V,1608	1	SA
....4	C4128	2203-000189	C-CER,CHIP;100nF,+80-20%,25V,Y5V,1608	1	SA
....4	C5026	2203-000189	C-CER,CHIP;100nF,+80-20%,25V,Y5V,1608	1	SA
....4	C5038	2203-000189	C-CER,CHIP;100nF,+80-20%,25V,Y5V,1608	1	SA
....4	C5043	2203-000189	C-CER,CHIP;100nF,+80-20%,25V,Y5V,1608	1	SA
....4	C5022	2203-000221	C-CER,CHIP;100nF,20%,50V,Y5V,TP,3216	1	SA
....4	C1050	2203-000236	C-CER,CHIP;0.1nF,5%,50V,C0G,1608	1	SA
....4	C1134	2203-000236	C-CER,CHIP;0.1nF,5%,50V,C0G,1608	1	SA
....4	C1135	2203-000236	C-CER,CHIP;0.1nF,5%,50V,C0G,1608	1	SA

ELECTRONIC SERVICE TIRGOVISTE

Level	Loc. No.	Code No.	Description & Specification	Q'ty	SA/SNA
....4	C1161	2203-000236	C-CER,CHIP;0.1nF,5%,50V,C0G,1608	1	SA
....4	C1162	2203-000236	C-CER,CHIP;0.1nF,5%,50V,C0G,1608	1	SA
....4	C1163	2203-000236	C-CER,CHIP;0.1nF,5%,50V,C0G,1608	1	SA
....4	C2003	2203-000236	C-CER,CHIP;0.1nF,5%,50V,C0G,1608	1	SA
....4	C2004	2203-000236	C-CER,CHIP;0.1nF,5%,50V,C0G,1608	1	SA
....4	C2005	2203-000236	C-CER,CHIP;0.1nF,5%,50V,C0G,1608	1	SA
....4	C2006	2203-000236	C-CER,CHIP;0.1nF,5%,50V,C0G,1608	1	SA
....4	C2007	2203-000236	C-CER,CHIP;0.1nF,5%,50V,C0G,1608	1	SA
....4	C2011	2203-000236	C-CER,CHIP;0.1nF,5%,50V,C0G,1608	1	SA
....4	C2012	2203-000236	C-CER,CHIP;0.1nF,5%,50V,C0G,1608	1	SA
....4	C2013	2203-000236	C-CER,CHIP;0.1nF,5%,50V,C0G,1608	1	SA
....4	C2014	2203-000236	C-CER,CHIP;0.1nF,5%,50V,C0G,1608	1	SA
....4	C2019	2203-000236	C-CER,CHIP;0.1nF,5%,50V,C0G,1608	1	SA
....4	C2020	2203-000236	C-CER,CHIP;0.1nF,5%,50V,C0G,1608	1	SA
....4	C2022_DE	2203-000236	C-CER,CHIP;0.1nF,5%,50V,C0G,1608	1	SA
....4	C2023	2203-000236	C-CER,CHIP;0.1nF,5%,50V,C0G,1608	1	SA
....4	C2024	2203-000236	C-CER,CHIP;0.1nF,5%,50V,C0G,1608	1	SA
....4	C2025	2203-000236	C-CER,CHIP;0.1nF,5%,50V,C0G,1608	1	SA
....4	C2027	2203-000236	C-CER,CHIP;0.1nF,5%,50V,C0G,1608	1	SA
....4	C2028	2203-000236	C-CER,CHIP;0.1nF,5%,50V,C0G,1608	1	SA
....4	C2032	2203-000236	C-CER,CHIP;0.1nF,5%,50V,C0G,1608	1	SA
....4	C3024	2203-000236	C-CER,CHIP;0.1nF,5%,50V,C0G,1608	1	SA
....4	C3025	2203-000236	C-CER,CHIP;0.1nF,5%,50V,C0G,1608	1	SA
....4	C5059	2203-000236	C-CER,CHIP;0.1nF,5%,50V,C0G,1608	1	SA
....4	C5068	2203-000236	C-CER,CHIP;0.1nF,5%,50V,C0G,1608	1	SA
....4	C5069	2203-000236	C-CER,CHIP;0.1nF,5%,50V,C0G,1608	1	SA
....4	C5084	2203-000236	C-CER,CHIP;0.1nF,5%,50V,C0G,1608	1	SA
....4	C5085	2203-000236	C-CER,CHIP;0.1nF,5%,50V,C0G,1608	1	SA
....4	C1002	2203-000257	C-CER,CHIP;10nF,10%,50V,X7R,1608	1	SA
....4	C1005	2203-000257	C-CER,CHIP;10nF,10%,50V,X7R,1608	1	SA
....4	C1013	2203-000257	C-CER,CHIP;10nF,10%,50V,X7R,1608	1	SA
....4	C1022	2203-000257	C-CER,CHIP;10nF,10%,50V,X7R,1608	1	SA
....4	C1026	2203-000257	C-CER,CHIP;10nF,10%,50V,X7R,1608	1	SA
....4	C1034	2203-000257	C-CER,CHIP;10nF,10%,50V,X7R,1608	1	SA
....4	C1049	2203-000257	C-CER,CHIP;10nF,10%,50V,X7R,1608	1	SA
....4	C1094	2203-000257	C-CER,CHIP;10nF,10%,50V,X7R,1608	1	SA
....4	C3035	2203-000257	C-CER,CHIP;10nF,10%,50V,X7R,1608	1	SA
....4	C4005	2203-000257	C-CER,CHIP;10nF,10%,50V,X7R,1608	1	SA
....4	C4006	2203-000257	C-CER,CHIP;10nF,10%,50V,X7R,1608	1	SA
....4	C4007	2203-000257	C-CER,CHIP;10nF,10%,50V,X7R,1608	1	SA
....4	C4008	2203-000257	C-CER,CHIP;10nF,10%,50V,X7R,1608	1	SA
....4	C4009	2203-000257	C-CER,CHIP;10nF,10%,50V,X7R,1608	1	SA
....4	C4124	2203-000257	C-CER,CHIP;10nF,10%,50V,X7R,1608	1	SA
....4	C5006	2203-000257	C-CER,CHIP;10nF,10%,50V,X7R,1608	1	SA
....4	C5007	2203-000257	C-CER,CHIP;10nF,10%,50V,X7R,1608	1	SA
....4	C5008	2203-000257	C-CER,CHIP;10nF,10%,50V,X7R,1608	1	SA
....4	C5009	2203-000257	C-CER,CHIP;10nF,10%,50V,X7R,1608	1	SA
....4	C5010	2203-000257	C-CER,CHIP;10nF,10%,50V,X7R,1608	1	SA
....4	C5017	2203-000257	C-CER,CHIP;10nF,10%,50V,X7R,1608	1	SA
....4	C5036	2203-000257	C-CER,CHIP;10nF,10%,50V,X7R,1608	1	SA
....4	C5040	2203-000257	C-CER,CHIP;10nF,10%,50V,X7R,1608	1	SA
....4	C5061	2203-000257	C-CER,CHIP;10nF,10%,50V,X7R,1608	1	SA
....4	C5062	2203-000257	C-CER,CHIP;10nF,10%,50V,X7R,1608	1	SA
....4	C5064	2203-000257	C-CER,CHIP;10nF,10%,50V,X7R,1608	1	SA
....4	C1110	2203-000426	C-CER,CHIP;0.018nF,5%,50V,C0G,1608	1	SA
....4	C1121	2203-000440	C-CER,CHIP;1nF,10%,50V,X7R,1608	1	SA
....4	C3002	2203-000440	C-CER,CHIP;1nF,10%,50V,X7R,1608	1	SA
....4	C3003	2203-000440	C-CER,CHIP;1nF,10%,50V,X7R,1608	1	SA
....4	C3007	2203-000440	C-CER,CHIP;1nF,10%,50V,X7R,1608	1	SA
....4	C3020	2203-000440	C-CER,CHIP;1nF,10%,50V,X7R,1608	1	SA

ELECTRONIC SERVICE TIRGOVISTE

Level	Loc. No.	Code No.	Description & Specification	Q'ty	SA/SNA
....4	C3021	2203-000440	C-CER,CHIP;1nF,10%,50V,X7R,1608	1	SA
....4	C3029	2203-000440	C-CER,CHIP;1nF,10%,50V,X7R,1608	1	SA
....4	C4119	2203-000440	C-CER,CHIP;1nF,10%,50V,X7R,1608	1	SA
....4	C5087	2203-000440	C-CER,CHIP;1nF,10%,50V,X7R,1608	1	SA
....4	C4058	2203-000531	C-CER,CHIP;2.7nF,10%,50V,X7R,1608	1	SA
....4	C4066	2203-000531	C-CER,CHIP;2.7nF,10%,50V,X7R,1608	1	SA
....4	C4001	2203-000552	C-CER,CHIP;0.02nF,5%,50V,C0G,1608	1	SA
....4	C4011	2203-000552	C-CER,CHIP;0.02nF,5%,50V,C0G,1608	1	SA
....4	C1070	2203-000626	C-CER,CHIP;0.022nF,5%,50V,C0G,1608	1	SA
....4	C1082	2203-000626	C-CER,CHIP;0.022nF,5%,50V,C0G,1608	1	SA
....4	C3012	2203-000626	C-CER,CHIP;0.022nF,5%,50V,C0G,1608	1	SA
....4	C3013	2203-000626	C-CER,CHIP;0.022nF,5%,50V,C0G,1608	1	SA
....4	C3030	2203-000626	C-CER,CHIP;0.022nF,5%,50V,C0G,1608	1	SA
....4	C3031	2203-000626	C-CER,CHIP;0.022nF,5%,50V,C0G,1608	1	SA
....4	C1111	2203-000715	C-CER,CHIP;3.3nF,10%,50V,X7R,1608	1	SA
....4	C1142	2203-000783	C-CER,CHIP;0.33nF,5%,50V,C0G,1608	1	SA
....4	C1152	2203-000783	C-CER,CHIP;0.33nF,5%,50V,C0G,1608	1	SA
....4	C2009	2203-000783	C-CER,CHIP;0.33nF,5%,50V,C0G,1608	1	SA
....4	C2010	2203-000783	C-CER,CHIP;0.33nF,5%,50V,C0G,1608	1	SA
....4	C2015	2203-000783	C-CER,CHIP;0.33nF,5%,50V,C0G,1608	1	SA
....4	C2016	2203-000783	C-CER,CHIP;0.33nF,5%,50V,C0G,1608	1	SA
....4	C2026	2203-000783	C-CER,CHIP;0.33nF,5%,50V,C0G,1608	1	SA
....4	C5076	2203-000783	C-CER,CHIP;0.33nF,5%,50V,C0G,1608	1	SA
....4	C5077	2203-000783	C-CER,CHIP;0.33nF,5%,50V,C0G,1608	1	SA
....4	C1100	2203-000798	C-CER,CHIP;33nF,10%,16V,X7R,TP,1608,-	1	SA
....4	C1101	2203-000798	C-CER,CHIP;33nF,10%,16V,X7R,TP,1608,-	1	SA
....4	C2029	2203-000815	C-CER,CHIP;0.033nF,5%,50V,C0G,1608	1	SA
....4	C2030	2203-000815	C-CER,CHIP;0.033nF,5%,50V,C0G,1608	1	SA
....4	C2031	2203-000815	C-CER,CHIP;0.033nF,5%,50V,C0G,1608	1	SA
....4	C5056	2203-000815	C-CER,CHIP;0.033nF,5%,50V,C0G,1608	1	SA
....4	C5057	2203-000815	C-CER,CHIP;0.033nF,5%,50V,C0G,1608	1	SA
....4	C5058	2203-000815	C-CER,CHIP;0.033nF,5%,50V,C0G,1608	1	SA
....4	C1119	2203-000888	C-CER,CHIP;4.7nF,10%,50V,X7R,1608	1	SA
....4	C1120	2203-000888	C-CER,CHIP;4.7nF,10%,50V,X7R,1608	1	SA
....4	C4003	2203-000888	C-CER,CHIP;4.7nF,10%,50V,X7R,1608	1	SA
....4	C4004	2203-000888	C-CER,CHIP;4.7nF,10%,50V,X7R,1608	1	SA
....4	C5003	2203-000888	C-CER,CHIP;4.7nF,10%,50V,X7R,1608	1	SA
....4	C5004	2203-000888	C-CER,CHIP;4.7nF,10%,50V,X7R,1608	1	SA
....4	C1063	2203-000972	C-CER,CHIP;47nF,10%,16V,X7R,1608	1	SA
....4	C2008	2203-000998	C-CER,CHIP;0.047nF,5%,50V,C0G,1608	1	SA
....4	C2021	2203-000998	C-CER,CHIP;0.047nF,5%,50V,C0G,1608	1	SA
....4	C5063	2203-000998	C-CER,CHIP;0.047nF,5%,50V,C0G,1608	1	SA
....4	C1056	2203-001402	C-CER,CHIP;220nF,+80-20%,16V,Y5V,TP,1608	1	SA
....4	C1164	2203-001607	C-CER,CHIP;0.22nF,5%,50V,NP0,1608	1	SA
....4	C1114	2203-001652	C-CER,CHIP;470nF,+80-20%,16V,Y5V,1608	1	SA
....4	C1116	2203-001652	C-CER,CHIP;470nF,+80-20%,16V,Y5V,1608	1	SA
....4	C1038	2203-001656	C-CER,CHIP;0.47nF,5%,50V,NP0,1608	1	SA
....4	C1061	2203-001656	C-CER,CHIP;0.47nF,5%,50V,NP0,1608	1	SA
....4	C3039	2203-001656	C-CER,CHIP;0.47nF,5%,50V,NP0,1608	1	SA
....4	C1117	2203-001724	C-CER,CHIP;4700nF,+80-20%,16V,Y5V,3216	1	SA
....4	C1003	2203-005005	C-CER,CHIP;100nF,10%,16V,X7R,1608	1	SA
....4	C1011	2203-005005	C-CER,CHIP;100nF,10%,16V,X7R,1608	1	SA
....4	C1032	2203-005005	C-CER,CHIP;100nF,10%,16V,X7R,1608	1	SA
....4	C1039	2203-005005	C-CER,CHIP;100nF,10%,16V,X7R,1608	1	SA
....4	C1066	2203-005005	C-CER,CHIP;100nF,10%,16V,X7R,1608	1	SA
....4	C1068	2203-005005	C-CER,CHIP;100nF,10%,16V,X7R,1608	1	SA
....4	C1071	2203-005005	C-CER,CHIP;100nF,10%,16V,X7R,1608	1	SA
....4	C1072	2203-005005	C-CER,CHIP;100nF,10%,16V,X7R,1608	1	SA
....4	C1073	2203-005005	C-CER,CHIP;100nF,10%,16V,X7R,1608	1	SA
....4	C1074	2203-005005	C-CER,CHIP;100nF,10%,16V,X7R,1608	1	SA

ELECTRONIC SERVICE TIRGOVISTE

Level	Loc. No.	Code No.	Description & Specification	Q'ty	SA/SNA
....4	C1078	2203-005005	C-CER,CHIP;100nF,10%,16V,X7R,1608	1	SA
....4	C1079	2203-005005	C-CER,CHIP;100nF,10%,16V,X7R,1608	1	SA
....4	C1093	2203-005005	C-CER,CHIP;100nF,10%,16V,X7R,1608	1	SA
....4	C1104	2203-005005	C-CER,CHIP;100nF,10%,16V,X7R,1608	1	SA
....4	C1108	2203-005005	C-CER,CHIP;100nF,10%,16V,X7R,1608	1	SA
....4	C1129	2203-005005	C-CER,CHIP;100nF,10%,16V,X7R,1608	1	SA
....4	C1130	2203-005005	C-CER,CHIP;100nF,10%,16V,X7R,1608	1	SA
....4	C1148	2203-005005	C-CER,CHIP;100nF,10%,16V,X7R,1608	1	SA
....4	C1169	2203-005005	C-CER,CHIP;100nF,10%,16V,X7R,1608	1	SA
....4	C1171	2203-005005	C-CER,CHIP;100nF,10%,16V,X7R,1608	1	SA
....4	C1173	2203-005005	C-CER,CHIP;100nF,10%,16V,X7R,1608	1	SA
....4	C3009	2203-005005	C-CER,CHIP;100nF,10%,16V,X7R,1608	1	SA
....4	C3010	2203-005005	C-CER,CHIP;100nF,10%,16V,X7R,1608	1	SA
....4	C3014	2203-005005	C-CER,CHIP;100nF,10%,16V,X7R,1608	1	SA
....4	C3015	2203-005005	C-CER,CHIP;100nF,10%,16V,X7R,1608	1	SA
....4	C3016	2203-005005	C-CER,CHIP;100nF,10%,16V,X7R,1608	1	SA
....4	C3018	2203-005005	C-CER,CHIP;100nF,10%,16V,X7R,1608	1	SA
....4	C3019	2203-005005	C-CER,CHIP;100nF,10%,16V,X7R,1608	1	SA
....4	C3022	2203-005005	C-CER,CHIP;100nF,10%,16V,X7R,1608	1	SA
....4	C3026	2203-005005	C-CER,CHIP;100nF,10%,16V,X7R,1608	1	SA
....4	C3027	2203-005005	C-CER,CHIP;100nF,10%,16V,X7R,1608	1	SA
....4	C3032	2203-005005	C-CER,CHIP;100nF,10%,16V,X7R,1608	1	SA
....4	C3037	2203-005005	C-CER,CHIP;100nF,10%,16V,X7R,1608	1	SA
....4	C3040	2203-005005	C-CER,CHIP;100nF,10%,16V,X7R,1608	1	SA
....4	C3042	2203-005005	C-CER,CHIP;100nF,10%,16V,X7R,1608	1	SA
....4	C3044	2203-005005	C-CER,CHIP;100nF,10%,16V,X7R,1608	1	SA
....4	C3046	2203-005005	C-CER,CHIP;100nF,10%,16V,X7R,1608	1	SA
....4	C3047	2203-005005	C-CER,CHIP;100nF,10%,16V,X7R,1608	1	SA
....4	C3049	2203-005005	C-CER,CHIP;100nF,10%,16V,X7R,1608	1	SA
....4	C4002	2203-005005	C-CER,CHIP;100nF,10%,16V,X7R,1608	1	SA
....4	C4125	2203-005005	C-CER,CHIP;100nF,10%,16V,X7R,1608	1	SA
....4	C4126	2203-005005	C-CER,CHIP;100nF,10%,16V,X7R,1608	1	SA
....4	C4129	2203-005005	C-CER,CHIP;100nF,10%,16V,X7R,1608	1	SA
....4	C5001	2203-005005	C-CER,CHIP;100nF,10%,16V,X7R,1608	1	SA
....4	C5002	2203-005005	C-CER,CHIP;100nF,10%,16V,X7R,1608	1	SA
....4	C5011	2203-005005	C-CER,CHIP;100nF,10%,16V,X7R,1608	1	SA
....4	C5012	2203-005005	C-CER,CHIP;100nF,10%,16V,X7R,1608	1	SA
....4	C5021	2203-005005	C-CER,CHIP;100nF,10%,16V,X7R,1608	1	SA
....4	C5023	2203-005005	C-CER,CHIP;100nF,10%,16V,X7R,1608	1	SA
....4	C5039	2203-005005	C-CER,CHIP;100nF,10%,16V,X7R,1608	1	SA
....4	C5054	2203-005005	C-CER,CHIP;100nF,10%,16V,X7R,1608	1	SA
....4	C1143	2203-005030	C-CER,CHIP;470nF,+80-20%,50V,Y5V,TP,3216	1	SA
....4	C1153	2203-005030	C-CER,CHIP;470nF,+80-20%,50V,Y5V,TP,3216	1	SA
....4	C1031	2203-005065	C-CER,CHIP;1000nF,+80-20%,10V,Y5V,1608	1	SA
....4	C1040	2203-005065	C-CER,CHIP;1000nF,+80-20%,10V,Y5V,1608	1	SA
....4	C1155	2203-005065	C-CER,CHIP;1000nF,+80-20%,10V,Y5V,1608	1	SA
....4	C2038	2203-005065	C-CER,CHIP;1000nF,+80-20%,10V,Y5V,1608	1	SA
....4	C3023	2203-005065	C-CER,CHIP;1000nF,+80-20%,10V,Y5V,1608	1	SA
....4	C3033	2203-005065	C-CER,CHIP;1000nF,+80-20%,10V,Y5V,1608	1	SA
....4	C4117	2203-005065	C-CER,CHIP;1000nF,+80-20%,10V,Y5V,1608	1	SA
....4	C4118	2203-005065	C-CER,CHIP;1000nF,+80-20%,10V,Y5V,1608	1	SA
....4	C1122	2203-005249	C-CER,CHIP;100nF,10%,50V,X7R,1608	1	SA
....4	C1131	2203-005249	C-CER,CHIP;100nF,10%,50V,X7R,1608	1	SA
....4	C1137	2203-005249	C-CER,CHIP;100nF,10%,50V,X7R,1608	1	SA
....4	C1138	2203-005249	C-CER,CHIP;100nF,10%,50V,X7R,1608	1	SA
....4	C1140	2203-005249	C-CER,CHIP;100nF,10%,50V,X7R,1608	1	SA
....4	C1144	2203-005249	C-CER,CHIP;100nF,10%,50V,X7R,1608	1	SA
....4	C1145	2203-005249	C-CER,CHIP;100nF,10%,50V,X7R,1608	1	SA
....4	C1146	2203-005249	C-CER,CHIP;100nF,10%,50V,X7R,1608	1	SA
....4	C1147	2203-005249	C-CER,CHIP;100nF,10%,50V,X7R,1608	1	SA

ELECTRONIC SERVICE TIRGOVISTE

Level	Loc. No.	Code No.	Description & Specification	Q'ty	SA/SNA
....4	C1149	2203-005249	C-CER,CHIP;100nF,10%,50V,X7R,1608	1	SA
....4	C1150	2203-005249	C-CER,CHIP;100nF,10%,50V,X7R,1608	1	SA
....4	C1154	2203-005249	C-CER,CHIP;100nF,10%,50V,X7R,1608	1	SA
....4	C1156	2203-005249	C-CER,CHIP;100nF,10%,50V,X7R,1608	1	SA
....4	C1157	2203-005249	C-CER,CHIP;100nF,10%,50V,X7R,1608	1	SA
....4	C1160	2203-005249	C-CER,CHIP;100nF,10%,50V,X7R,1608	1	SA
....4	C1166	2203-005249	C-CER,CHIP;100nF,10%,50V,X7R,1608	1	SA
....4	C4014	2203-005533	C-CER,CHIP;1000nF,20%,6.3V,X7R,TP,1608	1	SA
....4	C4015	2203-005533	C-CER,CHIP;1000nF,20%,6.3V,X7R,TP,1608	1	SA
....4	C4024	2203-005533	C-CER,CHIP;1000nF,20%,6.3V,X7R,TP,1608	1	SA
....4	C4033	2203-005533	C-CER,CHIP;1000nF,20%,6.3V,X7R,TP,1608	1	SA
....4	C4037	2203-005533	C-CER,CHIP;1000nF,20%,6.3V,X7R,TP,1608	1	SA
....4	C4044	2203-005533	C-CER,CHIP;1000nF,20%,6.3V,X7R,TP,1608	1	SA
....4	C4050	2203-005533	C-CER,CHIP;1000nF,20%,6.3V,X7R,TP,1608	1	SA
....4	C4065	2203-005533	C-CER,CHIP;1000nF,20%,6.3V,X7R,TP,1608	1	SA
....4	C4074	2203-005533	C-CER,CHIP;1000nF,20%,6.3V,X7R,TP,1608	1	SA
....4	C4075	2203-005533	C-CER,CHIP;1000nF,20%,6.3V,X7R,TP,1608	1	SA
....4	C4078	2203-005533	C-CER,CHIP;1000nF,20%,6.3V,X7R,TP,1608	1	SA
....4	C4079	2203-005533	C-CER,CHIP;1000nF,20%,6.3V,X7R,TP,1608	1	SA
....4	C4087	2203-005533	C-CER,CHIP;1000nF,20%,6.3V,X7R,TP,1608	1	SA
....4	C4088	2203-005533	C-CER,CHIP;1000nF,20%,6.3V,X7R,TP,1608	1	SA
....4	C4089	2203-005533	C-CER,CHIP;1000nF,20%,6.3V,X7R,TP,1608	1	SA
....4	C4090	2203-005533	C-CER,CHIP;1000nF,20%,6.3V,X7R,TP,1608	1	SA
....4	C4091	2203-005533	C-CER,CHIP;1000nF,20%,6.3V,X7R,TP,1608	1	SA
....4	C4092	2203-005533	C-CER,CHIP;1000nF,20%,6.3V,X7R,TP,1608	1	SA
....4	C4093	2203-005533	C-CER,CHIP;1000nF,20%,6.3V,X7R,TP,1608	1	SA
....4	C4094	2203-005533	C-CER,CHIP;1000nF,20%,6.3V,X7R,TP,1608	1	SA
....4	C1001	2203-006333	C-CER,CHIP;10000nF,20%,16V,X5R,TP,3216	1	SA
....4	C1012	2203-006333	C-CER,CHIP;10000nF,20%,16V,X5R,TP,3216	1	SA
....4	C1014	2203-006333	C-CER,CHIP;10000nF,20%,16V,X5R,TP,3216	1	SA
....4	C1017	2203-006333	C-CER,CHIP;10000nF,20%,16V,X5R,TP,3216	1	SA
....4	C1018	2203-006333	C-CER,CHIP;10000nF,20%,16V,X5R,TP,3216	1	SA
....4	C1019	2203-006333	C-CER,CHIP;10000nF,20%,16V,X5R,TP,3216	1	SA
....4	C1020	2203-006333	C-CER,CHIP;10000nF,20%,16V,X5R,TP,3216	1	SA
....4	C1023	2203-006333	C-CER,CHIP;10000nF,20%,16V,X5R,TP,3216	1	SA
....4	C1024	2203-006333	C-CER,CHIP;10000nF,20%,16V,X5R,TP,3216	1	SA
....4	C1030	2203-006333	C-CER,CHIP;10000nF,20%,16V,X5R,TP,3216	1	SA
....4	C1033	2203-006333	C-CER,CHIP;10000nF,20%,16V,X5R,TP,3216	1	SA
....4	C1035	2203-006333	C-CER,CHIP;10000nF,20%,16V,X5R,TP,3216	1	SA
....4	C1041	2203-006333	C-CER,CHIP;10000nF,20%,16V,X5R,TP,3216	1	SA
....4	C1044	2203-006333	C-CER,CHIP;10000nF,20%,16V,X5R,TP,3216	1	SA
....4	C1045	2203-006333	C-CER,CHIP;10000nF,20%,16V,X5R,TP,3216	1	SA
....4	C1047	2203-006333	C-CER,CHIP;10000nF,20%,16V,X5R,TP,3216	1	SA
....4	C1048	2203-006333	C-CER,CHIP;10000nF,20%,16V,X5R,TP,3216	1	SA
....4	C1051	2203-006333	C-CER,CHIP;10000nF,20%,16V,X5R,TP,3216	1	SA
....4	C1058	2203-006333	C-CER,CHIP;10000nF,20%,16V,X5R,TP,3216	1	SA
....4	C1060	2203-006333	C-CER,CHIP;10000nF,20%,16V,X5R,TP,3216	1	SA
....4	C1065	2203-006333	C-CER,CHIP;10000nF,20%,16V,X5R,TP,3216	1	SA
....4	C1076	2203-006333	C-CER,CHIP;10000nF,20%,16V,X5R,TP,3216	1	SA
....4	C1080	2203-006333	C-CER,CHIP;10000nF,20%,16V,X5R,TP,3216	1	SA
....4	C1081	2203-006333	C-CER,CHIP;10000nF,20%,16V,X5R,TP,3216	1	SA
....4	C1083	2203-006333	C-CER,CHIP;10000nF,20%,16V,X5R,TP,3216	1	SA
....4	C1085	2203-006333	C-CER,CHIP;10000nF,20%,16V,X5R,TP,3216	1	SA
....4	C1088	2203-006333	C-CER,CHIP;10000nF,20%,16V,X5R,TP,3216	1	SA
....4	C1089	2203-006333	C-CER,CHIP;10000nF,20%,16V,X5R,TP,3216	1	SA
....4	C1090	2203-006333	C-CER,CHIP;10000nF,20%,16V,X5R,TP,3216	1	SA
....4	C1091	2203-006333	C-CER,CHIP;10000nF,20%,16V,X5R,TP,3216	1	SA
....4	C1092	2203-006333	C-CER,CHIP;10000nF,20%,16V,X5R,TP,3216	1	SA
....4	C1096	2203-006333	C-CER,CHIP;10000nF,20%,16V,X5R,TP,3216	1	SA
....4	C1099	2203-006333	C-CER,CHIP;10000nF,20%,16V,X5R,TP,3216	1	SA

ELECTRONIC SERVICE TIRGOVISTE

Level	Loc. No.	Code No.	Description & Specification	Q'ty	SA/SNA
....4	C1126	2203-006333	C-CER,CHIP;10000nF,20%,16V,X5R,TP,3216	1	SA
....4	C1136	2203-006333	C-CER,CHIP;10000nF,20%,16V,X5R,TP,3216	1	SA
....4	C1172	2203-006333	C-CER,CHIP;10000nF,20%,16V,X5R,TP,3216	1	SA
....4	C3017	2203-006333	C-CER,CHIP;10000nF,20%,16V,X5R,TP,3216	1	SA
....4	C4057	2203-006333	C-CER,CHIP;10000nF,20%,16V,X5R,TP,3216	1	SA
....4	C4064	2203-006333	C-CER,CHIP;10000nF,20%,16V,X5R,TP,3216	1	SA
....4	C4072	2203-006333	C-CER,CHIP;10000nF,20%,16V,X5R,TP,3216	1	SA
....4	C4082	2203-006333	C-CER,CHIP;10000nF,20%,16V,X5R,TP,3216	1	SA
....4	C4122	2203-006333	C-CER,CHIP;10000nF,20%,16V,X5R,TP,3216	1	SA
....4	C5083	2203-006333	C-CER,CHIP;10000nF,20%,16V,X5R,TP,3216	1	SA
....4	C5086	2203-006333	C-CER,CHIP;10000nF,20%,16V,X5R,TP,3216	1	SA
....4	C2001	2402-000108	C-AL,SMD;10uF,20%,16V,WT,TP,4.3x4.3x5.2m	1	SA
....4	C5037	2402-000108	C-AL,SMD;10uF,20%,16V,WT,TP,4.3x4.3x5.2m	1	SA
....4	C5041	2402-000108	C-AL,SMD;10uF,20%,16V,WT,TP,4.3x4.3x5.2m	1	SA
....4	C5024	2402-000179	C-AL,SMD;47uF,20%,16V,GP,TP,6.6x6.6x5.7m	1	SA
....4	C4012	2402-001059	C-AL,SMD;220UF,20%,6.3V,-,TP,6X6.6X6.6	1	SA
....4	C4013	2402-001059	C-AL,SMD;220UF,20%,6.3V,-,TP,6X6.6X6.6	1	SA
....4	C1102	2402-001081	C-AL,SMD;100uF,20%,25V,WT,TP,8.3x8.3x10	1	SA
....4	C1125	2402-001083	C-AL,SMD;100uF,20%,50V,GP,TP,10x10.3x10m	1	SA
....4	C5032	2402-001097	C-AL,SMD;0.1UF,20%,50V,WT,TP,4.3X4.3X5.2	1	SA
....4	C5033	2402-001097	C-AL,SMD;0.1UF,20%,50V,WT,TP,4.3X4.3X5.2	1	SA
....4	C1009	2402-001128	C-AL,SMD;100UF,20%,16V,WT,TP,6.3X5.7MM	1	SA
....4	C1010	2402-001128	C-AL,SMD;100UF,20%,16V,WT,TP,6.3X5.7MM	1	SA
....4	C1015	2402-001128	C-AL,SMD;100UF,20%,16V,WT,TP,6.3X5.7MM	1	SA
....4	C1029	2402-001128	C-AL,SMD;100UF,20%,16V,WT,TP,6.3X5.7MM	1	SA
....4	C1036	2402-001128	C-AL,SMD;100UF,20%,16V,WT,TP,6.3X5.7MM	1	SA
....4	C1042	2402-001128	C-AL,SMD;100UF,20%,16V,WT,TP,6.3X5.7MM	1	SA
....4	C1059	2402-001128	C-AL,SMD;100UF,20%,16V,WT,TP,6.3X5.7MM	1	SA
....4	C1112	2402-001128	C-AL,SMD;100UF,20%,16V,WT,TP,6.3X5.7MM	1	SA
....4	C1113	2402-001128	C-AL,SMD;100UF,20%,16V,WT,TP,6.3X5.7MM	1	SA
....4	C1115	2402-001128	C-AL,SMD;100UF,20%,16V,WT,TP,6.3X5.7MM	1	SA
....4	C1123	2402-001128	C-AL,SMD;100UF,20%,16V,WT,TP,6.3X5.7MM	1	SA
....4	C1007	2402-001129	C-AL,SMD;47UF,20%,16V,WT,TP,6.3X5.2MM	1	SA
....4	C1028	2402-001129	C-AL,SMD;47UF,20%,16V,WT,TP,6.3X5.2MM	1	SA
....4	C1064	2402-001129	C-AL,SMD;47UF,20%,16V,WT,TP,6.3X5.2MM	1	SA
....4	C1069	2402-001129	C-AL,SMD;47UF,20%,16V,WT,TP,6.3X5.2MM	1	SA
....4	C1107	2402-001129	C-AL,SMD;47UF,20%,16V,WT,TP,6.3X5.2MM	1	SA
....4	C3036	2402-001129	C-AL,SMD;47UF,20%,16V,WT,TP,6.3X5.2MM	1	SA
....4	C3038	2402-001129	C-AL,SMD;47UF,20%,16V,WT,TP,6.3X5.2MM	1	SA
....4	C4010	2402-001129	C-AL,SMD;47UF,20%,16V,WT,TP,6.3X5.2MM	1	SA
....4	C5042	2402-001129	C-AL,SMD;47UF,20%,16V,WT,TP,6.3X5.2MM	1	SA
....4	C1106	2402-001160	C-AL,SMD;330UF,20%,16V,WT,TP,1008	1	SA
....4	C1077	2402-001178	C-AL,SMD;10uF,20%,16V,WT,TP,4.3x4.3x5.8m	1	SA
....4	C1139	2402-001178	C-AL,SMD;10uF,20%,16V,WT,TP,4.3x4.3x5.8m	1	SA
....4	C2017	2402-001178	C-AL,SMD;10uF,20%,16V,WT,TP,4.3x4.3x5.8m	1	SA
....4	C3004	2402-001178	C-AL,SMD;10uF,20%,16V,WT,TP,4.3x4.3x5.8m	1	SA
....4	C3006	2402-001178	C-AL,SMD;10uF,20%,16V,WT,TP,4.3x4.3x5.8m	1	SA
....4	C3008	2402-001178	C-AL,SMD;10uF,20%,16V,WT,TP,4.3x4.3x5.8m	1	SA
....4	C3011	2402-001178	C-AL,SMD;10uF,20%,16V,WT,TP,4.3x4.3x5.8m	1	SA
....4	C3028	2402-001178	C-AL,SMD;10uF,20%,16V,WT,TP,4.3x4.3x5.8m	1	SA
....4	C3041	2402-001178	C-AL,SMD;10uF,20%,16V,WT,TP,4.3x4.3x5.8m	1	SA
....4	C3043	2402-001178	C-AL,SMD;10uF,20%,16V,WT,TP,4.3x4.3x5.8m	1	SA
....4	C3045	2402-001178	C-AL,SMD;10uF,20%,16V,WT,TP,4.3x4.3x5.8m	1	SA
....4	C3048	2402-001178	C-AL,SMD;10uF,20%,16V,WT,TP,4.3x4.3x5.8m	1	SA
....4	C3050	2402-001178	C-AL,SMD;10uF,20%,16V,WT,TP,4.3x4.3x5.8m	1	SA
....4	C3051	2402-001178	C-AL,SMD;10uF,20%,16V,WT,TP,4.3x4.3x5.8m	1	SA
....4	C1057	2402-001183	C-AL,SMD;22UF,20%,16V,WT,TP,5.3X5.3X6MM	1	SA
....4	C1128	2402-001183	C-AL,SMD;22UF,20%,16V,WT,TP,5.3X5.3X6MM	1	SA
....4	C1167	2402-001183	C-AL,SMD;22UF,20%,16V,WT,TP,5.3X5.3X6MM	1	SA
....4	C1170	2402-001183	C-AL,SMD;22UF,20%,16V,WT,TP,5.3X5.3X6MM	1	SA

ELECTRONIC SERVICE TIRGOVISTE

Level	Loc. No.	Code No.	Description & Specification	Q'ty	SA/SNA
....4	C4123	2402-001183	C-AL,SMD;22UF,20%,16V,WT,TP,5.3X5.3X6MM	1	SA
....4	C5005	2402-001183	C-AL,SMD;22UF,20%,16V,WT,TP,5.3X5.3X6MM	1	SA
....4	C5016	2402-001183	C-AL,SMD;22UF,20%,16V,WT,TP,5.3X5.3X6MM	1	SA
....4	C1127	2402-001221	C-AL,SMD;470UF,20%,16V,-,TP,A8.3XB8.3XL1	1	SA
....4	C1165	2402-001221	C-AL,SMD;470UF,20%,16V,-,TP,A8.3XB8.3XL1	1	SA
....4	C4030	2402-001226	C-AL,SMD;4.7UF,20%,35V,HR,TP,4.3X4.3X5.8	1	SA
....4	C4047	2402-001226	C-AL,SMD;4.7UF,20%,35V,HR,TP,4.3X4.3X5.8	1	SA
....4	C4051	2402-001226	C-AL,SMD;4.7UF,20%,35V,HR,TP,4.3X4.3X5.8	1	SA
....4	C4127	2402-001226	C-AL,SMD;4.7UF,20%,35V,HR,TP,4.3X4.3X5.8	1	SA
....4	C5078	2402-001257	C-AL,SMD;470uF,20%,16V,-,TP,8.3*10	1	SA
....4	C5079	2402-001257	C-AL,SMD;470uF,20%,16V,-,TP,8.3*10	1	SA
....4	C5080	2402-001257	C-AL,SMD;470uF,20%,16V,-,TP,8.3*10	1	SA
....4	C1095	2409-001029	C-ORGANIC;120uF,20%,6.3V,WT,TP,10.3x10.3	1	SA
....4	T0052	2703-000274	INDUCTOR-SMD;2.2uH,10%,2012	1	SA
....4	T0052	2703-000398	INDUCTOR-SMD;10uH,10%,3225	1	SA
....4	T0052	2703-000398	INDUCTOR-SMD;10uH,10%,3225	1	SA
....4	T0052	2703-000398	INDUCTOR-SMD;10uH,10%,3225	1	SA
....4	T0052	2703-000398	INDUCTOR-SMD;10uH,10%,3225	1	SA
....4	T0052	2703-000398	INDUCTOR-SMD;10uH,10%,3225	1	SA
....4	T0052	2703-000398	INDUCTOR-SMD;10uH,10%,3225	1	SA
....4	T0052	2703-000398	INDUCTOR-SMD;10uH,10%,3225	1	SA
....4	T0052	2703-000398	INDUCTOR-SMD;10uH,10%,3225	1	SA
....4	T0052	2703-000398	INDUCTOR-SMD;10uH,10%,3225	1	SA
....4	T0052	2703-000398	INDUCTOR-SMD;10uH,10%,3225	1	SA
....4	T0052	2703-000398	INDUCTOR-SMD;10uH,10%,3225	1	SA
....4	T0052	2703-000398	INDUCTOR-SMD;10uH,10%,3225	1	SA
....4	T0052	2703-000398	INDUCTOR-SMD;10uH,10%,3225	1	SA
....4	T0052	2703-000398	INDUCTOR-SMD;10uH,10%,3225	1	SA
....4	T0052	2703-001229	INDUCTOR-SMD;2.2uH,10%,1608	1	SA
....4	T0052	2703-001229	INDUCTOR-SMD;2.2uH,10%,1608	1	SA
....4	T0052	2703-001229	INDUCTOR-SMD;2.2uH,10%,1608	1	SA
....4	T0052	2703-001229	INDUCTOR-SMD;2.2uH,10%,1608	1	SA
....4	T0052	2703-001229	INDUCTOR-SMD;2.2uH,10%,1608	1	SA
....4	T0052	2703-001229	INDUCTOR-SMD;2.2uH,10%,1608	1	SA
....4	T0052	2703-001778	INDUCTOR-SMD;3.3uH,20%,3225	1	SA
....4	T0052	2703-002722	INDUCTOR-SMD;22uH,20%,12x12mm	1	SA
....4	T0052	2703-002915	INDUCTOR-SMD;22uH,20%,8080	1	SA
....4	T0052	2703-002915	INDUCTOR-SMD;22uH,20%,8080	1	SA
....4	T0052	2703-002915	INDUCTOR-SMD;22uH,20%,8080	1	SA
....4	T0052	2703-002915	INDUCTOR-SMD;22uH,20%,8080	1	SA
....4	X3002	2801-003326	CRYSTAL-SMD;24MHZ,30PPM,28-ABX,20PF,50OH	1	SA
....4	X3001	2801-003923	CRYSTAL-SMD;10MHz,30ppm,28-AAN,20pF,60oh	1	SA
....4	X1001	2801-003954	CRYSTAL-SMD;27MHz,30ppm,28-AAN,16pF,50oh	1	SA
....4	X4001	2801-004483	CRYSTAL-SMD;28.322MHz,30ppm,HC-49,20pF,5	1	SA
....4	F103	2901-001114	FILTER-EMI SMD;25VDC,2.0ADC,-,100nF,3.2x	1	SA
....4	T0568	3301-000314	BEAD-SMD;120ohm,1.6x0.8x0.8mm,-,-,-	1	SNA
....4	T0568	3301-000314	BEAD-SMD;120ohm,1.6x0.8x0.8mm,-,-,-	1	SNA
....4	T0568	3301-001145	BEAD-SMD;60ohm,4516,TP,70ohm/45MHz,82ohm	1	SNA
....4	T0568	3301-001145	BEAD-SMD;60ohm,4516,TP,70ohm/45MHz,82ohm	1	SNA
....4	T0568	3301-001145	BEAD-SMD;60ohm,4516,TP,70ohm/45MHz,82ohm	1	SNA
....4	T0568	3301-001145	BEAD-SMD;60ohm,4516,TP,70ohm/45MHz,82ohm	1	SNA
....4	T0568	3301-001236	BEAD-SMD;60ohm,1608,-,-,-	1	SNA
....4	T0568	3301-001236	BEAD-SMD;60ohm,1608,-,-,-	1	SNA
....4	T0568	3301-001236	BEAD-SMD;60ohm,1608,-,-,-	1	SNA
....4	T0568	3301-001236	BEAD-SMD;60ohm,1608,-,-,-	1	SNA
....4	T0568	3301-001236	BEAD-SMD;60ohm,1608,-,-,-	1	SNA
....4	T0568	3301-001236	BEAD-SMD;60ohm,1608,-,-,-	1	SNA
....4	T0568	3301-001324	BEAD-SMD;15ohm,2012,600mA,TP,,,0.1ohm	1	SNA
....4	T0568	3301-001324	BEAD-SMD;15ohm,2012,600mA,TP,,,0.1ohm	1	SNA

ELECTRONIC SERVICE TIRGOVISTE

Level	Loc. No.	Code No.	Description & Specification	Q'ty	SA/SNA
....4	T0568	3301-001324	BEAD-SMD;15ohm,2012,600mA,TP,,,0.1ohm	1	SNA
....4	T0568	3301-001324	BEAD-SMD;15ohm,2012,600mA,TP,,,0.1ohm	1	SNA
....4	T0568	3301-001324	BEAD-SMD;15ohm,2012,600mA,TP,,,0.1ohm	1	SNA
....4	T0568	3301-001324	BEAD-SMD;15ohm,2012,600mA,TP,,,0.1ohm	1	SNA
....4	T0568	3301-001324	BEAD-SMD;15ohm,2012,600mA,TP,,,0.1ohm	1	SNA
....4	T0568	3301-001324	BEAD-SMD;15ohm,2012,600mA,TP,,,0.1ohm	1	SNA
....4	T0568	3301-001324	BEAD-SMD;15ohm,2012,600mA,TP,,,0.1ohm	1	SNA
....4	T0568	3301-001324	BEAD-SMD;15ohm,2012,600mA,TP,,,0.1ohm	1	SNA
....4	T0568	3301-001324	BEAD-SMD;15ohm,2012,600mA,TP,,,0.1ohm	1	SNA
....4	T0568	3301-001324	BEAD-SMD;15ohm,2012,600mA,TP,,,0.1ohm	1	SNA
....4	T0568	3301-001324	BEAD-SMD;15ohm,2012,600mA,TP,,,0.1ohm	1	SNA
....4	T0568	3301-001393	BEAD-SMD;60ohm,3216,1500mA,TP,41ohm/40MH	1	SNA
....4	T0568	3301-001404	BEAD-SMD;30ohm,2012,TP,-,-	1	SA
....4	T0568	3301-001404	BEAD-SMD;30ohm,2012,TP,-,-	1	SA
....4	T0568	3301-001404	BEAD-SMD;30ohm,2012,TP,-,-	1	SA
....4	T0568	3301-001404	BEAD-SMD;30ohm,2012,TP,-,-	1	SA
....4	T0568	3301-001404	BEAD-SMD;30ohm,2012,TP,-,-	1	SA
....4	T0568	3301-001404	BEAD-SMD;30ohm,2012,TP,-,-	1	SA
....4	T0568	3301-001569	BEAD-SMD;600ohm,2012,1000mA,TP,520ohm/90	1	SNA
....4	T0568	3301-001569	BEAD-SMD;600ohm,2012,1000mA,TP,520ohm/90	1	SNA
....4	T0568	3301-001569	BEAD-SMD;600ohm,2012,1000mA,TP,520ohm/90	1	SNA
....4	CN2001	3701-001311	CONNECTOR-HDMI;21P,2R,FEMALE,SMD-S,AU30U	1	SA
....4	CN1003	3711-005291	HEADER-BOARD TO CABLE;BOX,2P,1R,2MM,SMD-	1	SA
....4	CN1002	3711-005292	HEADER-BOARD TO CABLE;BOX,3P,1R,2MM,SMD-	1	SA
....4	CN5001	3711-005497	HEADER-BOARD TO CABLE;BOX,15P,1R,1.25MM,	1	SA
....4	L1012	BN27-00007A	COIL CHOKE-SMD;DHB0504-100,RB15/17NS,10u	1	SA
....4	T0077	BN41-00700B	PCB MAIN;CAMBRIDGE,FR-4,4,MP2.0,1.6T,192	1	SNA
....4	M0018	BN97-00805F	ASSY MICOM;T-BRDMPEUD-1011,LE32R73BDX/XE	1	SA
.....5	IC115	1107-001555	IC-FLASH MEMORY;49BV802A,8MBIT,1MX8/512K	1	SNA
....4	M0018	BN97-00805G	ASSY MICOM;T-XXXX-XXXX,LE32R73BDX/XEU24C	1	SA
.....5	IC520	0903-001389	IC-MICROCONTROLLER;S3F866B,8Bit,QFP,44P,	1	SNA
1		BN91-01008D	ASSY SHIELD-AM LCD;LE40R73BDX/XEU,40",CA	1	SNA
..2	M0081	6003-000115	SCREW-TAPTITE;BH,+,B,M3,L6,ZPC(BLK),SWRC	4	SNA
..2	M0081	6003-000115	SCREW-TAPTITE;BH,+,B,M3,L6,ZPC(BLK),SWRC	4	SNA
..2	M0081	6003-000115	SCREW-TAPTITE;BH,+,B,M3,L6,ZPC(BLK),SWRC	2	SNA
..2	M0081	6003-000115	SCREW-TAPTITE;BH,+,B,M3,L6,ZPC(BLK),SWRC	3	SNA
..2	M0081	6003-000115	SCREW-TAPTITE;BH,+,B,M3,L6,ZPC(BLK),SWRC	2	SNA
..2	M0081	6003-000115	SCREW-TAPTITE;BH,+,B,M3,L6,ZPC(BLK),SWRC	1	SNA
..2	M0081	6003-001003	SCREW-TAPTITE;BH,+,B,M4,L12,ZPC(BLK),SWR	2	SNA
..2	M0081	6003-001003	SCREW-TAPTITE;BH,+,B,M4,L12,ZPC(BLK),SWR	1	SNA
..2	M0081	6003-001003	SCREW-TAPTITE;BH,+,B,M4,L12,ZPC(BLK),SWR	9	SNA
..2	M0081	6003-001003	SCREW-TAPTITE;BH,+,B,M4,L12,ZPC(BLK),SWR	1	SNA
..2	M0081	6003-001003	SCREW-TAPTITE;BH,+,B,M4,L12,ZPC(BLK),SWR	2	SNA
..2	M0081	6003-001003	SCREW-TAPTITE;BH,+,B,M4,L12,ZPC(BLK),SWR	1	SNA
..2	T0081	6006-000245	SCREW-MACHINE;WSP,PH,+,M4,L8,ZPC(YEL),SW	5	SNA
..2	T0081	6006-000245	SCREW-MACHINE;WSP,PH,+,M4,L8,ZPC(YEL),SW	1	SNA
..2	T0076	BN39-00615D	CBF HARNESS;BORDEAUX,1617#22,3P,1P,RING,	1	SA
..2	M2893	BN39-00691B	LEAD CONNECTOR;LE32R71BX,UL1007#26,16P,1	1	SA
..2	M2893	BN39-00716B	LEAD CONNECTOR;LE40R71BX/XEC,UL3239#24,2	1	SA
..2	M2893	BN39-00717A	LEAD CONNECTOR;LE32R71BX/XEC,UL3443#28,5	1	SA
..2	M0174	BN44-00134A	IP BOARD;SIP40,LE40R71B,2.0~3.0mA,6.0~7.	1	SA
..2		BN61-02258A	BRACKET-STAND LINK;Bordeaux 40,SECC,T1.6	1	SNA
..2	M0146	BN63-02462A	SHIELD CASE;CAMBRIDGE 32,SECC,T0.8,UK	1	SNA
..2		BN96-03056A	ASSY BOARD P-HOLDER AV;40R71,EO,ABS+PMMA	1	SNA
...3		BN61-02250A	HOLDER-SIDE AV;40R71,EO,KO,SO,ABS+PMMA,H	1	SNA
...3	T0578	BN64-00454A	INLAY AV;BORDEAUX,PS SHEET,T0.3,-,-,-,EO	1	SNA
...3	M0020	BN96-02439A	ASSY BOARD P-SUB AV SIDE;MILANO,CT5000-3	1	SA
...3	M2893	BN39-00672A	LEAD CONNECTOR;LNR329DX/XAA,UL2835#28,UL	1	SA
..2	M2893	BH39-00362G	LEAD CONNECTOR;SONOMA,UL1007#26,5PIN,100	1	SA

ELECTRONIC SERVICE TIRGOVISTE

Level	Loc. No.	Code No.	Description & Specification	Q'ty	SA/SNA
..2	M2893	BN39-00712C	LEAD CONNECTOR-LVDS;Bordeaux,UL1571#30,3	1	SA
..2		BN61-02256B	BRACKET-PANEL SIDE;Bordeaux 40,SECC,T1.2	1	SNA
..2		BN61-02257B	BRACKET-PANEL SIDE;Bordeaux 40,SECC,T1.2	1	SNA
..2	T0447	BN96-03442B	ASSY BRACKET P-PANEL;CAMBRIDGE40,SECC,AM	1	SNA
...3	M0081	6003-000115	SCREW-TAPTITE;BH,+,B,M3,L6,ZPC(BLK),SWRC	2	SNA
...3	M0081	6003-000115	SCREW-TAPTITE;BH,+,B,M3,L6,ZPC(BLK),SWRC	2	SNA
...3	M0146	BN61-02251B	BRACKET-PANEL TOP;Bordeaux 40,SECC,T1.2	1	SNA
...3		BN61-02252B	BRACKET-PANEL BOTTOM;Bordeaux 40,SECC,T1	1	SNA
...3		BN61-02253A	BRACKET-GUIDE MAIN;Bordeaux 40,SECC,T1.2	1	SNA
...3		BN61-02254A	BRACKET-GUIDE POWER;Bordeaux 40,SECC,T1.	1	SNA
...3		BN61-02255A	BRACKET-GUIDE POWER;Bordeaux 40,SECC,T1.	1	SNA
...3	T0514	BN61-02393A	BRACKET-SUPPORT;CAMBRIDGE 32,SECC,T1.2	1	SNA
...3	T0101	BN61-02427A	BRACKET-WALL;BORDEAUX 40,SECC,T1.2	1	SNA
...3	M0131	AA63-01401A	GASKET;LE40R71BX,Conductive Fabric,22mm,	1	SNA
...3	M0131	AA63-01438A	GASKET;Bordeaux,Conductive Fabric,7mm,8m	1	SNA
...3	M0131	AA63-01447A	GASKET;Cambridge,Conductive Fabric,20mm,	1	SNA
..2	M0114	BN61-02500A	HOLDER-WIRE;NYLON6.6,NATURAL	2	SNA
..2		BN96-03590A	ASSY SHIELD P-PCB MAIN;CAMBRIDGE32,SECC	1	SNA
...3	T0603	BN63-02458A	SHIELD-PCB MAIN;CAMBRIDGE 32,SECC,T0.5,U	1	SNA
...3	M0131	BN63-02627A	GASKET;Oxford,Conductive Fabric,8,13,30,	1	SNA
1	T0852	BN91-01017B	ASSY LCD-SPZ;LE40R71BX/*	1	SNA
..2	M0215	BN07-00264A	LCD-PANEL;LTA400WT-L01,8bit,952*551*51.0	1	SA
1	M0045	BN92-01661L	ASSY ACCESSORY;LE40R73BDX/XEE	1	SNA
..2	M0045	BN96-02984L	ASSY ACCESSORY;LE40R73BDX/XEE	1	SNA
...3	T0268	3903-000145	CBF-POWER CORD;DT,EU,FP3/YES,U(IEC C13-R	1	SA
...3	T0524	6902-000110	BAG PE;LDPE,T0.05,W250,L400,TRP,28,2	2	SNA
...3	ACCESSORY	AA68-03242E	MANUAL FLYER-01,SAFETY GUIDE;All Model,S	1	SNA
...3	ACCESSORY	AA68-03575A	MANUAL FLYER-01,REGISTRATION C;XEU,ENG,U	1	SNA
...3	T0074	BN59-00516A	REMOCON;CAMBRIDGE,TM87B,45,CAMBRIDGE,EUR	1	SA
...3	ACCESSORY	BN63-01798A	CLOTH-CLEAN;RE40**,CLOTH,310,320,RHCM	1	SNA
...3	T0531	BN63-02366A	COVER-BOTTOM;40R71,ABS+PMMA,HB,BK23,H/GL	1	SNA
...3	ACCESSORY	BN68-00514A	MANUAL FLYER-04,WARRANTY CARD;PDP/LCD TV	1	SNA
...3	T0059	BN68-00895A	MANUAL FLYER-CARD;COMM,SAMSUNG,W/P 5G,PR	1	SNA
...3	T0059	BN68-00907A	MANUAL FLYER-CARD;COMM,SAMSUNG,18 LANG,E	1	SNA
...3	T0511	BN68-01007D	MANUAL USERS;COMM,SAMSUNG,Eng/Swe,Sweden	1	SNA
...3		BN69-01052A	BOX ACCESSORY-00;ALL,CB-SW1,YEL,W603,D67	1	SNA
1	M0113	BN92-01665A	ASSY P/MATERIAL;40R71,BORDEAUX	1	SNA
..2	T0376	6902-000061	BAG AIR;LDPE,T0.2,L1000,W500,TRP,,,	0.05	SNA
..2	T0376	6902-000379	BAG AIR;LDPE,T0.2,W1000,L1800,TRP,-,--	0.015	SNA
..2	T0081	6902-000604	BAG WRAPPING;LDPE,T0.02,W500,L10000,TRP,	13.44	SNA
..2	T0524	6902-000524	BAG PE;HDPE/NITRON(DOUBLE),T0.015/T0.5(D	1	SNA
1	M0003	BN92-01667D	ASSY BOX;40R73,EO(XEE),CAMBRIDGE	1	SNA
..2		BN69-01266J	BOX-01,SET;40R73,DY-01,AB,YEL,A1,IDTV(GE	1.02	SNA
1	M0019	BN92-01801T	ASSY LABEL;LE40R73BDX/XEE	1	SNA

ELECTRONIC SERVICE TIRGOVISTE

6-4 LE26R74BDX/XEF Parts List

Level	Loc. No.	Code No.	Description & Specification	Q'ty	SA/SNA
0		LE26R74BDX/XE	LE26R74BD,R62C/26R72-GLY,26,LCD-TV,FRANC	0	
1	M0216	BN90-00848A	ASSY STAND;26R71,BORDEAUX	1	SNA
..2	M0013	BN96-03017A	ASSY STAND P-BASE;26R71,ABS+PMMA,HB,BK23	1	SA
...3	T0081	6002-001294	SCREW-TAPPING;BH,+,,M4,L16,ZPC(BLK)	4	SA
...3	M0081	6003-001239	SCREW-TAPTITE;FH,+,B,M4,L10,ZPC(YEL),SWR	4	SA
...3		BN61-02192A	GUIDE-STAND;26,32R71,ABS,V0,BLK	1	SNA
...3		BN61-02202A	BRACKET-STAND BOTTOM;BORDEAUX 26,SECC,T2	1	SNA
...3		BN61-02204A	HOLDER-SWIVEL RING;26,32R71,ACETAL,BLK	1	SNA
...3		BN61-02232A	HOLDER-SWIVEL RING;32R71,ACETAL NATUAL,T	1	SNA
...3		BN61-02233A	HOLDER-SWIVEL RING;32R71,ACETAL NATUAL,B	1	SNA
...3		BN61-02236A	BRACKET-HINGE SWIVEL;BORDEAUX 32,SECC,T1	1	SNA
...3		BN63-02322A	COVER-STAND SUB;32R71,ABS+PMMA,HB,BK23,H	1	SA
...3	T0004	BN63-02335A	COVER-STAND BASE;26R71,ABS+PMMA,HB,BK23,	1	SNA
...3	T0132	BN73-00052A	RUBBER FOOT;ARES 17,SILICON,DIA 17 * T1.	4	SNA
...3		BN63-02183D	COVER-SHEET;Rhcm,PE Vinyl,T0.05,680mm,20	0.4	SNA
...3	T0514	BN61-02367A	BRACKET-SUPPORT;BORDEAUX 32,SECC,T2.0	1	SNA
..2	T0524	6902-000241	BAG PE;NITRON/HDPE,T0.5/T0.012,W600,L600	1	SNA
1	M0002	BN90-00874A	ASSY COVER REAR;26R73,EO,CAMBRIDGE	1	SNA
..2	T0081	6002-001294	SCREW-TAPPING;BH,+,,M4,L16,ZPC(BLK)	2	SA
..2	T0081	6002-001294	SCREW-TAPPING;BH,+,,M4,L16,ZPC(BLK)	13	SA
..2	M0013	BN96-03245A	ASSY COVER P-REAR;26R73,EO,ABS+PMMA,HB,B	1	SA
...3	T0101	BN61-02058A	BRACKET-WALL;23,27,MGM,SECC,T1.6	2	SA
...3	M0006	BN63-02453A	COVER-REAR;26R73,EO,ABS+PMMA,HB,BK23,H/G	1	SA
...3	T0071	BN64-00444E	INLAY-TERMINAL;CAMBRIDGE,26,PS SHEET,T0.	1	SNA
...3		BN63-02183F	COVER-SHEET;Rhcm,PE Vinyl,T0.05,900mm,20	0.6	SNA
...3	T0064	BN65-00002A	CLAMPER CORE;BORDEAUX,PP,V0,BLK	1	SA
1	M0001	BN90-00892B	ASSY COVER FRONT;26R74,EO,CAMBRIDGE	1	SNA
..2	M0081	6003-001003	SCREW-TAPTITE;BH,+,B,M4,L12,ZPC(BLK),SWR	1	SNA
..2	M0081	6003-001003	SCREW-TAPTITE;BH,+,B,M4,L12,ZPC(BLK),SWR	2	SNA
..2	T0003	BN96-03260B	ASSY COVER P-FRONT;26R74,EO,ABS+PMMA,HB,	1	SA
...3	M0081	6003-001003	SCREW-TAPTITE;BH,+,B,M4,L12,ZPC(BLK),SWR	2	SNA
...3	T0060	BN61-01655A	SPRING ETC;STS-304 SUS,D8,L12,T0.5	1	SA
...3		BN63-02183F	COVER-SHEET;Rhcm,PE Vinyl,T0.05,900mm,20	1.118	SNA
...3	M0112	BN63-02395B	COVER-FRONT;26R74,EO,ABS+PMMA,HB,BK23,S/	1	SNA
...3	T0056	BN63-02396A	COVER-DECORATION;26R72,HIPS,HB,GR503,SVM	1	SNA
...3	T0059	BN64-00379A	INDICATOR LED;ROME-II,23,PC,CLEAR	1	SNA
...3	T0061	BN64-00453A	WINDOW-REMOCON;32R71,PC,V0,VIOLET,DIFFUS	1	SNA
...3	T0054	BN64-00465A	KNOB-DECORATION;26,32,37,40R72,ABS,HB,GR	1	SNA
...3	T0023	BN64-00466A	KNOB POWER;BORDEAUX-2,26,32,40,ABS HB,G4	1	SNA
...3		BN96-03404A	ASSY BOARD P-FUNCTION&KNOB;Bordeaux,CT50	1	SNA
....4	T0022	BN64-00442A	KNOB CONTROL;26,32,40R71,PC,BLK,ACRYL CL	1	SNA
....4	M0145	BN96-03045A	ASSY BOARD P-FUNCTION;BORDEAUX,FUNCTION	1	SA
...3	M0146	BN96-03437A	ASSY BOARD P-POWER;BORDEAUX2,CT5000-4150	1	SA
..2	T0175	BN96-03264A	ASSY SPEAKER P;16ohm,Bordeuax2, 26,Left,	1	SA
..2	T0175	BN96-03265A	ASSY SPEAKER P;16ohm,Bordeuax2, 26,Right	1	SA
1	M0017	BN91-01006F	ASSY CHASSIS;LE26R73BDX/XEF	1	SNA
..2	M0014	BN94-00866A	ASSY PCB MAIN;LE26R73BDX/XEU,CAMBRIDGE	1	SA
...3	T0245	0202-001522	SOLDER-WIRE FLUX;LFA3-107,-,D1.2,96.5Sn/	0.25	SNA
...3	JA2007	3701-001294	CONNECTOR-DSUB;15P,3R,FEMALE,STRAIGHT,AU	1	SA
...3	CN902	3703-001600	CONNECTOR-BACK PANEL;32P,2R,FEMALE,ANGLE	1	SA
...3	CN902	3703-001600	CONNECTOR-BACK PANEL;32P,2R,FEMALE,ANGLE	1	SA
...3	CN4002	3711-004484	HEADER-BOARD TO CABLE;BOX,5P,1R,2mm,STRA	1	SA
...3	TEST3001	3711-004484	HEADER-BOARD TO CABLE;BOX,5P,1R,2mm,STRA	1	SA
...3	CN4004	3711-005606	HEADER-BOARD TO CABLE;BOX,30P,2R,2mm,STR	1	SA
...3	CN1001	3711-005942	HEADER-BOARD TO CABLE;BOX,16P,1R,2mm,STR	1	SA
...3	JA2001	3722-000498	JACK-SCART;21P,-,SN,BLK,NO	1	SA

ELECTRONIC SERVICE SUBGOVISTE

Level	Loc. No.	Code No.	Description & Specification	Q'ty	SA/SNA
...3	JA2005	3722-000498	JACK-SCART;21P,-,SN,BLK,NO	1	SA
...3	JA2003	3722-001061	JACK-PHONE;1P,3.6PI,AG,BLK,N	1	SA
...3	JA2006	3722-001061	JACK-PHONE;1P,3.6PI,AG,BLK,N	1	SA
...3	JA2012_26	3722-001061	JACK-PHONE;1P,3.6PI,AG,BLK,N	1	SA
...3	JA2008_26	3722-001734	JACK-VHS;4P,SN,BLK,STRAIGHT	1	SA
...3	JA2010	3722-002360	JACK-PIN;3P,AU,GRN/BLU/RED,STRAIGHT	1	SA
...3	JA2002	3722-002362	JACK-PIN;2P,Sn,WHT/RED,STRAIGHT	1	SA
...3	JA2004	3722-002362	JACK-PIN;2P,Sn,WHT/RED,STRAIGHT	1	SA
...3	JA2009	3722-002362	JACK-PIN;2P,Sn,WHT/RED,STRAIGHT	1	SA
...3	JA2011_26	3722-002363	JACK-PIN;3P,Sn,YEL/WHT/RED,STRAIGHT	1	SA
...3	CIS3	BN40-00080A	TUNER;DNOS403ZH261B(S),DNOS403ZH261B(S),	1	SA
...3	T0852	BN96-01470A	ASSY BOARD P-OPTICAL;HP-P5581,OPTICAL	1	SA
....4	CN906	3707-001067	CONNECTOR-OPTICAL;PLUG,SM,-,4.4/2.0mm	1	SA
...3	T0510	BN97-00830A	ASSY SMD-MAIN;LE26R73BDX/XEU,CAMBRIDGE	1	SNA
....4	CIS05	0202-001477	SOLDER-CREAM;LST309-M,-,D20~45§-,96.5Sn/	3.571	SNA
....4	D2003	0401-001056	DIODE-SWITCHING;MMBD4148SE,100V,200mA,SO	1	SA
....4	D2010	0401-001056	DIODE-SWITCHING;MMBD4148SE,100V,200mA,SO	1	SA
....4	D2011	0401-001056	DIODE-SWITCHING;MMBD4148SE,100V,200mA,SO	1	SA
....4	D2012	0401-001056	DIODE-SWITCHING;MMBD4148SE,100V,200mA,SO	1	SA
....4	D2013	0401-001056	DIODE-SWITCHING;MMBD4148SE,100V,200mA,SO	1	SA
....4	D2016	0401-001056	DIODE-SWITCHING;MMBD4148SE,100V,200mA,SO	1	SA
....4	D2017	0401-001056	DIODE-SWITCHING;MMBD4148SE,100V,200mA,SO	1	SA
....4	D2018	0401-001056	DIODE-SWITCHING;MMBD4148SE,100V,200mA,SO	1	SA
....4	D2019	0401-001056	DIODE-SWITCHING;MMBD4148SE,100V,200mA,SO	1	SA
....4	D2020	0401-001056	DIODE-SWITCHING;MMBD4148SE,100V,200mA,SO	1	SA
....4	D2021	0401-001056	DIODE-SWITCHING;MMBD4148SE,100V,200mA,SO	1	SA
....4	D2022	0401-001056	DIODE-SWITCHING;MMBD4148SE,100V,200mA,SO	1	SA
....4	D2023	0401-001056	DIODE-SWITCHING;MMBD4148SE,100V,200mA,SO	1	SA
....4	D2032	0401-001056	DIODE-SWITCHING;MMBD4148SE,100V,200mA,SO	1	SA
....4	D2033	0401-001056	DIODE-SWITCHING;MMBD4148SE,100V,200mA,SO	1	SA
....4	D2034	0401-001056	DIODE-SWITCHING;MMBD4148SE,100V,200mA,SO	1	SA
....4	D2044	0401-001056	DIODE-SWITCHING;MMBD4148SE,100V,200mA,SO	1	SA
....4	D2047_26	0401-001056	DIODE-SWITCHING;MMBD4148SE,100V,200mA,SO	1	SA
....4	D2053_26	0401-001056	DIODE-SWITCHING;MMBD4148SE,100V,200mA,SO	1	SA
....4	D2057	0401-001056	DIODE-SWITCHING;MMBD4148SE,100V,200mA,SO	1	SA
....4	D2060_26	0401-001056	DIODE-SWITCHING;MMBD4148SE,100V,200mA,SO	1	SA
....4	D5001	0401-001056	DIODE-SWITCHING;MMBD4148SE,100V,200mA,SO	1	SA
....4	D5002	0401-001056	DIODE-SWITCHING;MMBD4148SE,100V,200mA,SO	1	SA
....4	D5003	0401-001056	DIODE-SWITCHING;MMBD4148SE,100V,200mA,SO	1	SA
....4	D5004	0401-001056	DIODE-SWITCHING;MMBD4148SE,100V,200mA,SO	1	SA
....4	D5005	0401-001056	DIODE-SWITCHING;MMBD4148SE,100V,200mA,SO	1	SA
....4	D5006	0401-001056	DIODE-SWITCHING;MMBD4148SE,100V,200mA,SO	1	SA
....4	D1001	0402-000553	DIODE-RECTIFIER;SS24,40V,2A,DO-214AA,TP	1	SA
....4	D1004	0402-000553	DIODE-RECTIFIER;SS24,40V,2A,DO-214AA,TP	1	SA
....4	D1008	0403-000258	DIODE-ZENER;BZX84C5V6,5.2-6V,225mW,SOT-2	1	SA
....4	D3003	0403-000258	DIODE-ZENER;BZX84C5V6,5.2-6V,225mW,SOT-2	1	SA
....4	D2001	0403-000620	DIODE-ZENER;RLZ5.6B,5.45-5.73V,500mW,LL-	1	SA
....4	D2002	0403-000620	DIODE-ZENER;RLZ5.6B,5.45-5.73V,500mW,LL-	1	SA
....4	D2040	0403-000620	DIODE-ZENER;RLZ5.6B,5.45-5.73V,500mW,LL-	1	SA
....4	D2041	0403-000620	DIODE-ZENER;RLZ5.6B,5.45-5.73V,500mW,LL-	1	SA
....4	D2042	0403-000620	DIODE-ZENER;RLZ5.6B,5.45-5.73V,500mW,LL-	1	SA
....4	D2043	0403-000620	DIODE-ZENER;RLZ5.6B,5.45-5.73V,500mW,LL-	1	SA
....4	D2064	0403-000620	DIODE-ZENER;RLZ5.6B,5.45-5.73V,500mW,LL-	1	SA
....4	D2065	0403-000620	DIODE-ZENER;RLZ5.6B,5.45-5.73V,500mW,LL-	1	SA
....4	D3006	0403-000620	DIODE-ZENER;RLZ5.6B,5.45-5.73V,500mW,LL-	1	SA
....4	D3008	0403-000620	DIODE-ZENER;RLZ5.6B,5.45-5.73V,500mW,LL-	1	SA
....4	D4001	0403-000620	DIODE-ZENER;RLZ5.6B,5.45-5.73V,500mW,LL-	1	SA
....4	D4002	0403-000620	DIODE-ZENER;RLZ5.6B,5.45-5.73V,500mW,LL-	1	SA
....4	D4003	0403-000620	DIODE-ZENER;RLZ5.6B,5.45-5.73V,500mW,LL-	1	SA
....4	D4005	0403-000620	DIODE-ZENER;RLZ5.6B,5.45-5.73V,500mW,LL-	1	SA

ELECTRONIC SERVICE TIRGOVISTE

Level	Loc. No.	Code No.	Description & Specification	Q'ty	SA/SNA
....4	D4006	0403-000620	DIODE-ZENER;RLZ5.6B,5.45-5.73V,500mW,LL-	1	SA
....4	D4007	0403-000620	DIODE-ZENER;RLZ5.6B,5.45-5.73V,500mW,LL-	1	SA
....4	D4008	0403-000620	DIODE-ZENER;RLZ5.6B,5.45-5.73V,500mW,LL-	1	SA
....4	D4009	0403-000620	DIODE-ZENER;RLZ5.6B,5.45-5.73V,500mW,LL-	1	SA
....4	D4010	0403-000620	DIODE-ZENER;RLZ5.6B,5.45-5.73V,500mW,LL-	1	SA
....4	D4011	0403-000620	DIODE-ZENER;RLZ5.6B,5.45-5.73V,500mW,LL-	1	SA
....4	D4012	0403-000620	DIODE-ZENER;RLZ5.6B,5.45-5.73V,500mW,LL-	1	SA
....4	D2004	0403-001016	DIODE-ZENER;RLZ6.2B,5.96-6.27V,500mW,LL-	1	SA
....4	D2009	0403-001169	DIODE-ZENER;RLZ16C,15.96-16.51V,500MW,LL	1	SA
....4	D2039	0403-001169	DIODE-ZENER;RLZ16C,15.96-16.51V,500MW,LL	1	SA
....4	D2005	0406-001172	DIODE-TVS;CDS3C30GTH,48V,0W,SMD	1	SA
....4	D2006	0406-001172	DIODE-TVS;CDS3C30GTH,48V,0W,SMD	1	SA
....4	D2007	0406-001172	DIODE-TVS;CDS3C30GTH,48V,0W,SMD	1	SA
....4	D2008	0406-001172	DIODE-TVS;CDS3C30GTH,48V,0W,SMD	1	SA
....4	D2014	0406-001172	DIODE-TVS;CDS3C30GTH,48V,0W,SMD	1	SA
....4	D2015	0406-001172	DIODE-TVS;CDS3C30GTH,48V,0W,SMD	1	SA
....4	D2024	0406-001172	DIODE-TVS;CDS3C30GTH,48V,0W,SMD	1	SA
....4	D2025	0406-001172	DIODE-TVS;CDS3C30GTH,48V,0W,SMD	1	SA
....4	D2026	0406-001172	DIODE-TVS;CDS3C30GTH,48V,0W,SMD	1	SA
....4	D2027	0406-001172	DIODE-TVS;CDS3C30GTH,48V,0W,SMD	1	SA
....4	D2028	0406-001172	DIODE-TVS;CDS3C30GTH,48V,0W,SMD	1	SA
....4	D2029	0406-001172	DIODE-TVS;CDS3C30GTH,48V,0W,SMD	1	SA
....4	D2030	0406-001172	DIODE-TVS;CDS3C30GTH,48V,0W,SMD	1	SA
....4	D2031	0406-001172	DIODE-TVS;CDS3C30GTH,48V,0W,SMD	1	SA
....4	D2035	0406-001172	DIODE-TVS;CDS3C30GTH,48V,0W,SMD	1	SA
....4	D2036	0406-001172	DIODE-TVS;CDS3C30GTH,48V,0W,SMD	1	SA
....4	D2037	0406-001172	DIODE-TVS;CDS3C30GTH,48V,0W,SMD	1	SA
....4	D2038	0406-001172	DIODE-TVS;CDS3C30GTH,48V,0W,SMD	1	SA
....4	D2045_26	0406-001172	DIODE-TVS;CDS3C30GTH,48V,0W,SMD	1	SA
....4	D2046_26	0406-001172	DIODE-TVS;CDS3C30GTH,48V,0W,SMD	1	SA
....4	D2048_26	0406-001172	DIODE-TVS;CDS3C30GTH,48V,0W,SMD	1	SA
....4	D2049_26	0406-001172	DIODE-TVS;CDS3C30GTH,48V,0W,SMD	1	SA
....4	D2050_26	0406-001172	DIODE-TVS;CDS3C30GTH,48V,0W,SMD	1	SA
....4	D2051	0406-001172	DIODE-TVS;CDS3C30GTH,48V,0W,SMD	1	SA
....4	D2052	0406-001172	DIODE-TVS;CDS3C30GTH,48V,0W,SMD	1	SA
....4	D2054	0406-001172	DIODE-TVS;CDS3C30GTH,48V,0W,SMD	1	SA
....4	D2055	0406-001172	DIODE-TVS;CDS3C30GTH,48V,0W,SMD	1	SA
....4	D2056	0406-001172	DIODE-TVS;CDS3C30GTH,48V,0W,SMD	1	SA
....4	D2058_26	0406-001172	DIODE-TVS;CDS3C30GTH,48V,0W,SMD	1	SA
....4	D2059_26	0406-001172	DIODE-TVS;CDS3C30GTH,48V,0W,SMD	1	SA
....4	D1002	0407-000123	DIODE-ARRAY;DAN202K,80V,100mA,CA2-3,SOT-	1	SA
....4	D1009	0407-000123	DIODE-ARRAY;DAN202K,80V,100mA,CA2-3,SOT-	1	SA
....4	D3001	0407-000123	DIODE-ARRAY;DAN202K,80V,100mA,CA2-3,SOT-	1	SA
....4	D3002	0407-000123	DIODE-ARRAY;DAN202K,80V,100mA,CA2-3,SOT-	1	SA
....4	Q1007	0501-000280	TR-SMALL SIGNAL;KSA1182,PNP,150MW,SOT-23	1	SA
....4	Q1001	0501-000342	TR-SMALL SIGNAL;KSC1623-Y,NPN,200mW,SOT-	1	SA
....4	Q1002	0501-000342	TR-SMALL SIGNAL;KSC1623-Y,NPN,200mW,SOT-	1	SA
....4	Q1005	0501-000342	TR-SMALL SIGNAL;KSC1623-Y,NPN,200mW,SOT-	1	SA
....4	Q1006	0501-000342	TR-SMALL SIGNAL;KSC1623-Y,NPN,200mW,SOT-	1	SA
....4	Q1008	0501-000342	TR-SMALL SIGNAL;KSC1623-Y,NPN,200mW,SOT-	1	SA
....4	Q1009	0501-000342	TR-SMALL SIGNAL;KSC1623-Y,NPN,200mW,SOT-	1	SA
....4	Q1010	0501-000342	TR-SMALL SIGNAL;KSC1623-Y,NPN,200mW,SOT-	1	SA
....4	Q1011	0501-000342	TR-SMALL SIGNAL;KSC1623-Y,NPN,200mW,SOT-	1	SA
....4	Q1013	0501-000342	TR-SMALL SIGNAL;KSC1623-Y,NPN,200mW,SOT-	1	SA
....4	Q1014	0501-000342	TR-SMALL SIGNAL;KSC1623-Y,NPN,200mW,SOT-	1	SA
....4	Q2001	0501-000342	TR-SMALL SIGNAL;KSC1623-Y,NPN,200mW,SOT-	1	SA
....4	Q3001	0501-000342	TR-SMALL SIGNAL;KSC1623-Y,NPN,200mW,SOT-	1	SA
....4	Q3003	0501-000342	TR-SMALL SIGNAL;KSC1623-Y,NPN,200mW,SOT-	1	SA
....4	Q3008	0501-000342	TR-SMALL SIGNAL;KSC1623-Y,NPN,200mW,SOT-	1	SA
....4	Q3010	0501-000342	TR-SMALL SIGNAL;KSC1623-Y,NPN,200mW,SOT-	1	SA

ELECTRONIC SERVICE TIRGOVISTE

Level	Loc. No.	Code No.	Description & Specification	Q'ty	SA/SNA
....4	Q3011	0501-000342	TR-SMALL SIGNAL;KSC1623-Y,NPN,200mW,SOT-	1	SA
....4	Q4001	0501-000342	TR-SMALL SIGNAL;KSC1623-Y,NPN,200mW,SOT-	1	SA
....4	Q5010	0501-000342	TR-SMALL SIGNAL;KSC1623-Y,NPN,200mW,SOT-	1	SA
....4	Q1003	0501-002080	TR-SMALL SIGNAL;2SC2412K,NPN,200mW,SC-59	1	SA
....4	Q1004	0501-002080	TR-SMALL SIGNAL;2SC2412K,NPN,200mW,SC-59	1	SA
....4	Q5011	0501-002080	TR-SMALL SIGNAL;2SC2412K,NPN,200mW,SC-59	1	SA
....4	Q409	0505-000110	FET-SILICON;2N7002,N,60V,115mA,7.5ohm,0.	1	SA
....4	Q409	0505-000110	FET-SILICON;2N7002,N,60V,115mA,7.5ohm,0.	1	SA
....4	Q409	0505-000110	FET-SILICON;2N7002,N,60V,115mA,7.5ohm,0.	1	SA
....4	Q409	0505-000110	FET-SILICON;2N7002,N,60V,115mA,7.5ohm,0.	1	SA
....4	Q409	0505-000110	FET-SILICON;2N7002,N,60V,115mA,7.5ohm,0.	1	SA
....4	Q409	0505-001170	FET-SILICON;SI9933ADY-T1,P,-20V,3.4A,0.0	1	SA
....4	IC104	0801-002095	IC-CMOS LOGIC;74LCX245,TRANSCEIVER,TSSOP	1	SA
....4	IC3002	0903-001432	IC-MICROCOMPUTER;M30840SGP,16Bit,LQFP,10	1	SA
....4	IC1003	1001-000164	IC-ANALOG MULTIPLEX;74HC4052,CMOS,SOP,16	1	SA
....4	IC1006	1001-000164	IC-ANALOG MULTIPLEX;74HC4052,CMOS,SOP,16	1	SA
....4	IC106	1001-001082	IC-VIDEO SWITCH;BA7657F,-,SOP,24P,300MIL	1	SA
....4	IC3006	1001-001109	IC-ANALOG SWITCH;FST3125M,BUS SWITCH & C	1	SA
....4	IC5005	1001-001109	IC-ANALOG SWITCH;FST3125M,BUS SWITCH & C	1	SA
....4	IC107	1002-001399	IC-D/A CONVERTER;PCM1754,24BIT,SSOP,16P,	1	SA
....4	IC110	1006-001076	IC-DRIVER/RECEIVER;MAX232ECWE+T,SOP,16P,	1	SA
....4	IC112	1103-000129	IC-EEPROM;24C02,2Kbit,256x8Bit,SOP,8P,5x	1	SA
....4	IC112	1103-000129	IC-EEPROM;24C02,2Kbit,256x8Bit,SOP,8P,5x	1	SA
....4	IC112	1103-001279	IC-EEPROM;24C32,32Kbit,4Kx8Bit,SOP,8P,5x	1	SA
....4	IC5002	1105-001538	IC-VIDEO RAM;K4D263238,-,128M,4x1Mx32Bit	1	SA
....4	DU410	1201-000166	IC-OP AMP;LM358,SOP,ST,8P,150MIL,DUAL,10	1	SA
....4	T0085	1201-002136	IC-AUDIO AMP;LM4810,MSOP,8P,3x3mm,DUAL,-	1	SA
....4	T0085	1201-002246	IC-AUDIO AMP;STA323W,SO,36P,15.9x11mm,-,	1	SA
....4	IC150	1203-001009	IC-SWITCH REG.;3172,SOP,8P,244MIL,PLASTI	1	SA
....4	IC3009	1203-001559	IC-RESET;DS1834A,SOIC,8P,150MIL,PLASTIC,	1	SA
....4	IC4006_26	1203-001559	IC-RESET;DS1834A,SOIC,8P,150MIL,PLASTIC,	1	SA
....4	T0087	1203-001815	IC-POSI.FIXED REG.;78M09,TO-252,3P,-,PLA	1	SA
....4	T0087	1203-001816	IC-POSI.FIXED REG.;78M08,TO-252,3P,-,PLA	1	SA
....4	T0087	1203-002842	IC-POSI.FIXED REG.;AP1117D-33A,TO-252,3P	1	SA
....4	T0087	1203-002842	IC-POSI.FIXED REG.;AP1117D-33A,TO-252,3P	1	SA
....4	T0087	1203-002855	IC-POSI.FIXED REG.;MC33269DTRK-5.0,DPRK,	1	SA
....4	T0087	1203-002974	IC-POSI.FIXED REG.;AP1117D-25A,TO-252,3P	1	SA
....4	T0170	1203-003059	IC-SWITCH VOL. REG.;MP1583,SOIC,8P,4.9x3	1	SA
....4	IC1009	1204-002464	IC-AUDIO PROCESSOR;STV8257DSX,TQFP,80P,1	1	SA
....4	IC118	1204-002503	IC-VIDEO PROCESS;SVP-PX56-7256,PQFP,256P	1	SNA
....4	R5026	2007-000043	R-CHIP;1Kohm,1%,1/10W,TP,1608	1	SA
....4	R5029	2007-000043	R-CHIP;1Kohm,1%,1/10W,TP,1608	1	SA
....4	R3088	2007-000052	R-CHIP;10Kohm,1%,1/10W,TP,1608	1	SA
....4	R3100	2007-000052	R-CHIP;10Kohm,1%,1/10W,TP,1608	1	SA
....4	R3101	2007-000052	R-CHIP;10Kohm,1%,1/10W,TP,1608	1	SA
....4	R3102	2007-000052	R-CHIP;10Kohm,1%,1/10W,TP,1608	1	SA
....4	R3103	2007-000052	R-CHIP;10Kohm,1%,1/10W,TP,1608	1	SA
....4	R3104	2007-000052	R-CHIP;10Kohm,1%,1/10W,TP,1608	1	SA
....4	R3105	2007-000052	R-CHIP;10Kohm,1%,1/10W,TP,1608	1	SA
....4	R3106	2007-000052	R-CHIP;10Kohm,1%,1/10W,TP,1608	1	SA
....4	R3107	2007-000052	R-CHIP;10Kohm,1%,1/10W,TP,1608	1	SA
....4	R3130	2007-000052	R-CHIP;10Kohm,1%,1/10W,TP,1608	1	SA
....4	R3141	2007-000052	R-CHIP;10Kohm,1%,1/10W,TP,1608	1	SA
....4	R5013	2007-000060	R-CHIP;100Kohm,1%,1/10W,TP,1608	1	SA
....4	R1066	2007-000067	R-CHIP;15Kohm,1%,1/10W,TP,1608	1	SA
....4	R1059	2007-000070	R-CHIP;0ohm,5%,1/10W,TP,1608	1	SA
....4	R1085	2007-000070	R-CHIP;0ohm,5%,1/10W,TP,1608	1	SA
....4	R1086	2007-000070	R-CHIP;0ohm,5%,1/10W,TP,1608	1	SA
....4	R1087	2007-000070	R-CHIP;0ohm,5%,1/10W,TP,1608	1	SA
....4	R2055	2007-000070	R-CHIP;0ohm,5%,1/10W,TP,1608	1	SA

ELECTRONIC SERVICE TIBGOVISTE

Level	Loc. No.	Code No.	Description & Specification	Q'ty	SA/SNA
....4	R2064	2007-000070	R-CHIP;0ohm,5%,1/10W,TP,1608	1	SA
....4	R2069_26	2007-000070	R-CHIP;0ohm,5%,1/10W,TP,1608	1	SA
....4	R2070_26	2007-000070	R-CHIP;0ohm,5%,1/10W,TP,1608	1	SA
....4	R2071_26	2007-000070	R-CHIP;0ohm,5%,1/10W,TP,1608	1	SA
....4	R2080	2007-000070	R-CHIP;0ohm,5%,1/10W,TP,1608	1	SA
....4	R2088_26	2007-000070	R-CHIP;0ohm,5%,1/10W,TP,1608	1	SA
....4	R2089_26	2007-000070	R-CHIP;0ohm,5%,1/10W,TP,1608	1	SA
....4	R2090_26	2007-000070	R-CHIP;0ohm,5%,1/10W,TP,1608	1	SA
....4	R2091_26	2007-000070	R-CHIP;0ohm,5%,1/10W,TP,1608	1	SA
....4	R3003	2007-000070	R-CHIP;0ohm,5%,1/10W,TP,1608	1	SA
....4	R3019	2007-000070	R-CHIP;0ohm,5%,1/10W,TP,1608	1	SA
....4	R3024	2007-000070	R-CHIP;0ohm,5%,1/10W,TP,1608	1	SA
....4	R3025_LVDS	2007-000070	R-CHIP;0ohm,5%,1/10W,TP,1608	1	SA
....4	R3026	2007-000070	R-CHIP;0ohm,5%,1/10W,TP,1608	1	SA
....4	R3027	2007-000070	R-CHIP;0ohm,5%,1/10W,TP,1608	1	SA
....4	R3028	2007-000070	R-CHIP;0ohm,5%,1/10W,TP,1608	1	SA
....4	R3029	2007-000070	R-CHIP;0ohm,5%,1/10W,TP,1608	1	SA
....4	R3031	2007-000070	R-CHIP;0ohm,5%,1/10W,TP,1608	1	SA
....4	R3032	2007-000070	R-CHIP;0ohm,5%,1/10W,TP,1608	1	SA
....4	R3033	2007-000070	R-CHIP;0ohm,5%,1/10W,TP,1608	1	SA
....4	R3035	2007-000070	R-CHIP;0ohm,5%,1/10W,TP,1608	1	SA
....4	R3037	2007-000070	R-CHIP;0ohm,5%,1/10W,TP,1608	1	SA
....4	R3039	2007-000070	R-CHIP;0ohm,5%,1/10W,TP,1608	1	SA
....4	R3040	2007-000070	R-CHIP;0ohm,5%,1/10W,TP,1608	1	SA
....4	R3041	2007-000070	R-CHIP;0ohm,5%,1/10W,TP,1608	1	SA
....4	R3043	2007-000070	R-CHIP;0ohm,5%,1/10W,TP,1608	1	SA
....4	R3047_LVDS	2007-000070	R-CHIP;0ohm,5%,1/10W,TP,1608	1	SA
....4	R3089	2007-000070	R-CHIP;0ohm,5%,1/10W,TP,1608	1	SA
....4	R3090	2007-000070	R-CHIP;0ohm,5%,1/10W,TP,1608	1	SA
....4	R3117	2007-000070	R-CHIP;0ohm,5%,1/10W,TP,1608	1	SA
....4	R3118	2007-000070	R-CHIP;0ohm,5%,1/10W,TP,1608	1	SA
....4	R3132	2007-000070	R-CHIP;0ohm,5%,1/10W,TP,1608	1	SA
....4	R4001	2007-000070	R-CHIP;0ohm,5%,1/10W,TP,1608	1	SA
....4	R4002	2007-000070	R-CHIP;0ohm,5%,1/10W,TP,1608	1	SA
....4	R4003	2007-000070	R-CHIP;0ohm,5%,1/10W,TP,1608	1	SA
....4	R4012	2007-000070	R-CHIP;0ohm,5%,1/10W,TP,1608	1	SA
....4	R4016	2007-000070	R-CHIP;0ohm,5%,1/10W,TP,1608	1	SA
....4	R4017	2007-000070	R-CHIP;0ohm,5%,1/10W,TP,1608	1	SA
....4	R4018	2007-000070	R-CHIP;0ohm,5%,1/10W,TP,1608	1	SA
....4	R4019	2007-000070	R-CHIP;0ohm,5%,1/10W,TP,1608	1	SA
....4	R4032	2007-000070	R-CHIP;0ohm,5%,1/10W,TP,1608	1	SA
....4	R4033	2007-000070	R-CHIP;0ohm,5%,1/10W,TP,1608	1	SA
....4	R4035	2007-000070	R-CHIP;0ohm,5%,1/10W,TP,1608	1	SA
....4	R4086_EN	2007-000070	R-CHIP;0ohm,5%,1/10W,TP,1608	1	SA
....4	R4090	2007-000070	R-CHIP;0ohm,5%,1/10W,TP,1608	1	SA
....4	R5012	2007-000070	R-CHIP;0ohm,5%,1/10W,TP,1608	1	SA
....4	R5014	2007-000070	R-CHIP;0ohm,5%,1/10W,TP,1608	1	SA
....4	R5068	2007-000070	R-CHIP;0ohm,5%,1/10W,TP,1608	1	SA
....4	R5076	2007-000070	R-CHIP;0ohm,5%,1/10W,TP,1608	1	SA
....4	R5084	2007-000070	R-CHIP;0ohm,5%,1/10W,TP,1608	1	SA
....4	R5087	2007-000070	R-CHIP;0ohm,5%,1/10W,TP,1608	1	SA
....4	R5099	2007-000070	R-CHIP;0ohm,5%,1/10W,TP,1608	1	SA
....4	R5100	2007-000070	R-CHIP;0ohm,5%,1/10W,TP,1608	1	SA
....4	R5101	2007-000070	R-CHIP;0ohm,5%,1/10W,TP,1608	1	SA
....4	R5115	2007-000070	R-CHIP;0ohm,5%,1/10W,TP,1608	1	SA
....4	R5116	2007-000070	R-CHIP;0ohm,5%,1/10W,TP,1608	1	SA
....4	R5117	2007-000070	R-CHIP;0ohm,5%,1/10W,TP,1608	1	SA
....4	R5120	2007-000070	R-CHIP;0ohm,5%,1/10W,TP,1608	1	SA
....4	R1084	2007-000071	R-CHIP;22ohm,5%,1/10W,TP,1608	1	SA
....4	R1095	2007-000071	R-CHIP;22ohm,5%,1/10W,TP,1608	1	SA

ELECTRONIC SERVICE TIRGOVISTE

Level	Loc. No.	Code No.	Description & Specification	Q'ty	SA/SNA
....4	R2050	2007-000071	R-CHIP;22ohm,5%,1/10W,TP,1608	1	SA
....4	R2063	2007-000071	R-CHIP;22ohm,5%,1/10W,TP,1608	1	SA
....4	R2106	2007-000071	R-CHIP;22ohm,5%,1/10W,TP,1608	1	SA
....4	R2107	2007-000071	R-CHIP;22ohm,5%,1/10W,TP,1608	1	SA
....4	R2108	2007-000071	R-CHIP;22ohm,5%,1/10W,TP,1608	1	SA
....4	R2109	2007-000071	R-CHIP;22ohm,5%,1/10W,TP,1608	1	SA
....4	R2110	2007-000071	R-CHIP;22ohm,5%,1/10W,TP,1608	1	SA
....4	R2111	2007-000071	R-CHIP;22ohm,5%,1/10W,TP,1608	1	SA
....4	R2112	2007-000071	R-CHIP;22ohm,5%,1/10W,TP,1608	1	SA
....4	R2113	2007-000071	R-CHIP;22ohm,5%,1/10W,TP,1608	1	SA
....4	R4015	2007-000071	R-CHIP;22ohm,5%,1/10W,TP,1608	1	SA
....4	R4020	2007-000071	R-CHIP;22ohm,5%,1/10W,TP,1608	1	SA
....4	R4093	2007-000071	R-CHIP;22ohm,5%,1/10W,TP,1608	1	SA
....4	R5030	2007-000071	R-CHIP;22ohm,5%,1/10W,TP,1608	1	SA
....4	R5031	2007-000071	R-CHIP;22ohm,5%,1/10W,TP,1608	1	SA
....4	R5032	2007-000071	R-CHIP;22ohm,5%,1/10W,TP,1608	1	SA
....4	R5033	2007-000071	R-CHIP;22ohm,5%,1/10W,TP,1608	1	SA
....4	R5061	2007-000071	R-CHIP;22ohm,5%,1/10W,TP,1608	1	SA
....4	R5065	2007-000071	R-CHIP;22ohm,5%,1/10W,TP,1608	1	SA
....4	R5071	2007-000071	R-CHIP;22ohm,5%,1/10W,TP,1608	1	SA
....4	R5077	2007-000071	R-CHIP;22ohm,5%,1/10W,TP,1608	1	SA
....4	R5081	2007-000071	R-CHIP;22ohm,5%,1/10W,TP,1608	1	SA
....4	R5085	2007-000071	R-CHIP;22ohm,5%,1/10W,TP,1608	1	SA
....4	R5088	2007-000071	R-CHIP;22ohm,5%,1/10W,TP,1608	1	SA
....4	R5090	2007-000071	R-CHIP;22ohm,5%,1/10W,TP,1608	1	SA
....4	R5094	2007-000071	R-CHIP;22ohm,5%,1/10W,TP,1608	1	SA
....4	R5098	2007-000071	R-CHIP;22ohm,5%,1/10W,TP,1608	1	SA
....4	R5102	2007-000071	R-CHIP;22ohm,5%,1/10W,TP,1608	1	SA
....4	R5104	2007-000071	R-CHIP;22ohm,5%,1/10W,TP,1608	1	SA
....4	R5106	2007-000071	R-CHIP;22ohm,5%,1/10W,TP,1608	1	SA
....4	R5108	2007-000071	R-CHIP;22ohm,5%,1/10W,TP,1608	1	SA
....4	R1061	2007-000072	R-CHIP;47ohm,5%,1/10W,TP,1608	1	SA
....4	R1063	2007-000072	R-CHIP;47ohm,5%,1/10W,TP,1608	1	SA
....4	R2007	2007-000072	R-CHIP;47ohm,5%,1/10W,TP,1608	1	SA
....4	R2008	2007-000072	R-CHIP;47ohm,5%,1/10W,TP,1608	1	SA
....4	R2049	2007-000072	R-CHIP;47ohm,5%,1/10W,TP,1608	1	SA
....4	R2051	2007-000072	R-CHIP;47ohm,5%,1/10W,TP,1608	1	SA
....4	R4104	2007-000072	R-CHIP;47ohm,5%,1/10W,TP,1608	1	SA
....4	R4105	2007-000072	R-CHIP;47ohm,5%,1/10W,TP,1608	1	SA
....4	R4106	2007-000072	R-CHIP;47ohm,5%,1/10W,TP,1608	1	SA
....4	R4107	2007-000072	R-CHIP;47ohm,5%,1/10W,TP,1608	1	SA
....4	R4108	2007-000072	R-CHIP;47ohm,5%,1/10W,TP,1608	1	SA
....4	R4109	2007-000072	R-CHIP;47ohm,5%,1/10W,TP,1608	1	SA
....4	R4110	2007-000072	R-CHIP;47ohm,5%,1/10W,TP,1608	1	SA
....4	R4111	2007-000072	R-CHIP;47ohm,5%,1/10W,TP,1608	1	SA
....4	R4112	2007-000072	R-CHIP;47ohm,5%,1/10W,TP,1608	1	SA
....4	R4113	2007-000072	R-CHIP;47ohm,5%,1/10W,TP,1608	1	SA
....4	R5019	2007-000072	R-CHIP;47ohm,5%,1/10W,TP,1608	1	SA
....4	R5020	2007-000072	R-CHIP;47ohm,5%,1/10W,TP,1608	1	SA
....4	R5048	2007-000072	R-CHIP;47ohm,5%,1/10W,TP,1608	1	SA
....4	R5050	2007-000072	R-CHIP;47ohm,5%,1/10W,TP,1608	1	SA
....4	R1009	2007-000074	R-CHIP;100ohm,5%,1/10W,TP,1608	1	SA
....4	R1010	2007-000074	R-CHIP;100ohm,5%,1/10W,TP,1608	1	SA
....4	R1011	2007-000074	R-CHIP;100ohm,5%,1/10W,TP,1608	1	SA
....4	R1012	2007-000074	R-CHIP;100ohm,5%,1/10W,TP,1608	1	SA
....4	R1013	2007-000074	R-CHIP;100ohm,5%,1/10W,TP,1608	1	SA
....4	R1014	2007-000074	R-CHIP;100ohm,5%,1/10W,TP,1608	1	SA
....4	R1017	2007-000074	R-CHIP;100ohm,5%,1/10W,TP,1608	1	SA
....4	R1018	2007-000074	R-CHIP;100ohm,5%,1/10W,TP,1608	1	SA
....4	R1032	2007-000074	R-CHIP;100ohm,5%,1/10W,TP,1608	1	SA

ELECTRONIC SERVICE TIRGOVISTE

Level	Loc. No.	Code No.	Description & Specification	Q'ty	SA/SNA
....4	R1033	2007-000074	R-CHIP;100ohm,5%,1/10W,TP,1608	1	SA
....4	R1037	2007-000074	R-CHIP;100ohm,5%,1/10W,TP,1608	1	SA
....4	R1040	2007-000074	R-CHIP;100ohm,5%,1/10W,TP,1608	1	SA
....4	R1042	2007-000074	R-CHIP;100ohm,5%,1/10W,TP,1608	1	SA
....4	R1047	2007-000074	R-CHIP;100ohm,5%,1/10W,TP,1608	1	SA
....4	R1048	2007-000074	R-CHIP;100ohm,5%,1/10W,TP,1608	1	SA
....4	R1049	2007-000074	R-CHIP;100ohm,5%,1/10W,TP,1608	1	SA
....4	R1050	2007-000074	R-CHIP;100ohm,5%,1/10W,TP,1608	1	SA
....4	R1052	2007-000074	R-CHIP;100ohm,5%,1/10W,TP,1608	1	SA
....4	R1053	2007-000074	R-CHIP;100ohm,5%,1/10W,TP,1608	1	SA
....4	R1054	2007-000074	R-CHIP;100ohm,5%,1/10W,TP,1608	1	SA
....4	R1055	2007-000074	R-CHIP;100ohm,5%,1/10W,TP,1608	1	SA
....4	R1056	2007-000074	R-CHIP;100ohm,5%,1/10W,TP,1608	1	SA
....4	R1091	2007-000074	R-CHIP;100ohm,5%,1/10W,TP,1608	1	SA
....4	R1092	2007-000074	R-CHIP;100ohm,5%,1/10W,TP,1608	1	SA
....4	R1093	2007-000074	R-CHIP;100ohm,5%,1/10W,TP,1608	1	SA
....4	R2018	2007-000074	R-CHIP;100ohm,5%,1/10W,TP,1608	1	SA
....4	R2022	2007-000074	R-CHIP;100ohm,5%,1/10W,TP,1608	1	SA
....4	R2023	2007-000074	R-CHIP;100ohm,5%,1/10W,TP,1608	1	SA
....4	R2029	2007-000074	R-CHIP;100ohm,5%,1/10W,TP,1608	1	SA
....4	R2031	2007-000074	R-CHIP;100ohm,5%,1/10W,TP,1608	1	SA
....4	R2053	2007-000074	R-CHIP;100ohm,5%,1/10W,TP,1608	1	SA
....4	R2058	2007-000074	R-CHIP;100ohm,5%,1/10W,TP,1608	1	SA
....4	R2060	2007-000074	R-CHIP;100ohm,5%,1/10W,TP,1608	1	SA
....4	R2068	2007-000074	R-CHIP;100ohm,5%,1/10W,TP,1608	1	SA
....4	R2081	2007-000074	R-CHIP;100ohm,5%,1/10W,TP,1608	1	SA
....4	R2084	2007-000074	R-CHIP;100ohm,5%,1/10W,TP,1608	1	SA
....4	R2093	2007-000074	R-CHIP;100ohm,5%,1/10W,TP,1608	1	SA
....4	R3008	2007-000074	R-CHIP;100ohm,5%,1/10W,TP,1608	1	SA
....4	R3009	2007-000074	R-CHIP;100ohm,5%,1/10W,TP,1608	1	SA
....4	R3010	2007-000074	R-CHIP;100ohm,5%,1/10W,TP,1608	1	SA
....4	R3011	2007-000074	R-CHIP;100ohm,5%,1/10W,TP,1608	1	SA
....4	R3034	2007-000074	R-CHIP;100ohm,5%,1/10W,TP,1608	1	SA
....4	R3046	2007-000074	R-CHIP;100ohm,5%,1/10W,TP,1608	1	SA
....4	R3057	2007-000074	R-CHIP;100ohm,5%,1/10W,TP,1608	1	SA
....4	R3058	2007-000074	R-CHIP;100ohm,5%,1/10W,TP,1608	1	SA
....4	R3059	2007-000074	R-CHIP;100ohm,5%,1/10W,TP,1608	1	SA
....4	R3062	2007-000074	R-CHIP;100ohm,5%,1/10W,TP,1608	1	SA
....4	R3063	2007-000074	R-CHIP;100ohm,5%,1/10W,TP,1608	1	SA
....4	R3073	2007-000074	R-CHIP;100ohm,5%,1/10W,TP,1608	1	SA
....4	R3074	2007-000074	R-CHIP;100ohm,5%,1/10W,TP,1608	1	SA
....4	R3077	2007-000074	R-CHIP;100ohm,5%,1/10W,TP,1608	1	SA
....4	R3078	2007-000074	R-CHIP;100ohm,5%,1/10W,TP,1608	1	SA
....4	R3125	2007-000074	R-CHIP;100ohm,5%,1/10W,TP,1608	1	SA
....4	R3127	2007-000074	R-CHIP;100ohm,5%,1/10W,TP,1608	1	SA
....4	R3135	2007-000074	R-CHIP;100ohm,5%,1/10W,TP,1608	1	SA
....4	R4028	2007-000074	R-CHIP;100ohm,5%,1/10W,TP,1608	1	SA
....4	R4038	2007-000074	R-CHIP;100ohm,5%,1/10W,TP,1608	1	SA
....4	R4049	2007-000074	R-CHIP;100ohm,5%,1/10W,TP,1608	1	SA
....4	R4050	2007-000074	R-CHIP;100ohm,5%,1/10W,TP,1608	1	SA
....4	R4097	2007-000074	R-CHIP;100ohm,5%,1/10W,TP,1608	1	SA
....4	R4102	2007-000074	R-CHIP;100ohm,5%,1/10W,TP,1608	1	SA
....4	R4120	2007-000074	R-CHIP;100ohm,5%,1/10W,TP,1608	1	SA
....4	R5010	2007-000074	R-CHIP;100ohm,5%,1/10W,TP,1608	1	SA
....4	R5066	2007-000074	R-CHIP;100ohm,5%,1/10W,TP,1608	1	SA
....4	R5069	2007-000074	R-CHIP;100ohm,5%,1/10W,TP,1608	1	SA
....4	R2001	2007-000076	R-CHIP;330ohm,5%,1/10W,TP,1608	1	SA
....4	R2005	2007-000076	R-CHIP;330ohm,5%,1/10W,TP,1608	1	SA
....4	R2035	2007-000076	R-CHIP;330ohm,5%,1/10W,TP,1608	1	SA
....4	R2040	2007-000076	R-CHIP;330ohm,5%,1/10W,TP,1608	1	SA

ELECTRONIC SERVICE TIRGOVISTE

Level	Loc. No.	Code No.	Description & Specification	Q'ty	SA/SNA
....4	R1098	2007-000077	R-CHIP;470ohm,5%,1/10W,TP,1608	1	SA
....4	R2004	2007-000077	R-CHIP;470ohm,5%,1/10W,TP,1608	1	SA
....4	R2006	2007-000077	R-CHIP;470ohm,5%,1/10W,TP,1608	1	SA
....4	R2033	2007-000077	R-CHIP;470ohm,5%,1/10W,TP,1608	1	SA
....4	R2034	2007-000077	R-CHIP;470ohm,5%,1/10W,TP,1608	1	SA
....4	R2037	2007-000077	R-CHIP;470ohm,5%,1/10W,TP,1608	1	SA
....4	R2039	2007-000077	R-CHIP;470ohm,5%,1/10W,TP,1608	1	SA
....4	R2042	2007-000077	R-CHIP;470ohm,5%,1/10W,TP,1608	1	SA
....4	R2043	2007-000077	R-CHIP;470ohm,5%,1/10W,TP,1608	1	SA
....4	R2074	2007-000077	R-CHIP;470ohm,5%,1/10W,TP,1608	1	SA
....4	R2075	2007-000077	R-CHIP;470ohm,5%,1/10W,TP,1608	1	SA
....4	R2077	2007-000077	R-CHIP;470ohm,5%,1/10W,TP,1608	1	SA
....4	R2079	2007-000077	R-CHIP;470ohm,5%,1/10W,TP,1608	1	SA
....4	R3128	2007-000077	R-CHIP;470ohm,5%,1/10W,TP,1608	1	SA
....4	R3133	2007-000077	R-CHIP;470ohm,5%,1/10W,TP,1608	1	SA
....4	R4030	2007-000077	R-CHIP;470ohm,5%,1/10W,TP,1608	1	SA
....4	R4031	2007-000077	R-CHIP;470ohm,5%,1/10W,TP,1608	1	SA
....4	R4099	2007-000077	R-CHIP;470ohm,5%,1/10W,TP,1608	1	SA
....4	R5091	2007-000077	R-CHIP;470ohm,5%,1/10W,TP,1608	1	SA
....4	R5093	2007-000077	R-CHIP;470ohm,5%,1/10W,TP,1608	1	SA
....4	R1074	2007-000078	R-CHIP;1Kohm,5%,1/10W,TP,1608	1	SA
....4	R2009	2007-000078	R-CHIP;1Kohm,5%,1/10W,TP,1608	1	SA
....4	R2016	2007-000078	R-CHIP;1Kohm,5%,1/10W,TP,1608	1	SA
....4	R2096_26	2007-000078	R-CHIP;1Kohm,5%,1/10W,TP,1608	1	SA
....4	R2097_26	2007-000078	R-CHIP;1Kohm,5%,1/10W,TP,1608	1	SA
....4	R3001	2007-000078	R-CHIP;1Kohm,5%,1/10W,TP,1608	1	SA
....4	R3030	2007-000078	R-CHIP;1Kohm,5%,1/10W,TP,1608	1	SA
....4	R3121	2007-000078	R-CHIP;1Kohm,5%,1/10W,TP,1608	1	SA
....4	R3138	2007-000078	R-CHIP;1Kohm,5%,1/10W,TP,1608	1	SA
....4	R3139	2007-000078	R-CHIP;1Kohm,5%,1/10W,TP,1608	1	SA
....4	R4025	2007-000078	R-CHIP;1Kohm,5%,1/10W,TP,1608	1	SA
....4	R4026	2007-000078	R-CHIP;1Kohm,5%,1/10W,TP,1608	1	SA
....4	R4027	2007-000078	R-CHIP;1Kohm,5%,1/10W,TP,1608	1	SA
....4	R4034	2007-000078	R-CHIP;1Kohm,5%,1/10W,TP,1608	1	SA
....4	R4053	2007-000078	R-CHIP;1Kohm,5%,1/10W,TP,1608	1	SA
....4	R4096	2007-000078	R-CHIP;1Kohm,5%,1/10W,TP,1608	1	SA
....4	R4103	2007-000078	R-CHIP;1Kohm,5%,1/10W,TP,1608	1	SA
....4	R5043	2007-000078	R-CHIP;1Kohm,5%,1/10W,TP,1608	1	SA
....4	R3016	2007-000082	R-CHIP;3.3Kohm,5%,1/10W,TP,1608	1	SA
....4	R3017	2007-000082	R-CHIP;3.3Kohm,5%,1/10W,TP,1608	1	SA
....4	R3071	2007-000082	R-CHIP;3.3Kohm,5%,1/10W,TP,1608	1	SA
....4	R3072	2007-000082	R-CHIP;3.3Kohm,5%,1/10W,TP,1608	1	SA
....4	R4100	2007-000082	R-CHIP;3.3Kohm,5%,1/10W,TP,1608	1	SA
....4	R4101	2007-000082	R-CHIP;3.3Kohm,5%,1/10W,TP,1608	1	SA
....4	R1031	2007-000084	R-CHIP;4.7Kohm,5%,1/10W,TP,1608	1	SA
....4	R1035	2007-000084	R-CHIP;4.7Kohm,5%,1/10W,TP,1608	1	SA
....4	R1058	2007-000084	R-CHIP;4.7Kohm,5%,1/10W,TP,1608	1	SA
....4	R1060	2007-000084	R-CHIP;4.7Kohm,5%,1/10W,TP,1608	1	SA
....4	R1082	2007-000084	R-CHIP;4.7Kohm,5%,1/10W,TP,1608	1	SA
....4	R3002	2007-000084	R-CHIP;4.7Kohm,5%,1/10W,TP,1608	1	SA
....4	R3014	2007-000084	R-CHIP;4.7Kohm,5%,1/10W,TP,1608	1	SA
....4	R3015	2007-000084	R-CHIP;4.7Kohm,5%,1/10W,TP,1608	1	SA
....4	R3018	2007-000084	R-CHIP;4.7Kohm,5%,1/10W,TP,1608	1	SA
....4	R3020	2007-000084	R-CHIP;4.7Kohm,5%,1/10W,TP,1608	1	SA
....4	R3021	2007-000084	R-CHIP;4.7Kohm,5%,1/10W,TP,1608	1	SA
....4	R3022	2007-000084	R-CHIP;4.7Kohm,5%,1/10W,TP,1608	1	SA
....4	R3036	2007-000084	R-CHIP;4.7Kohm,5%,1/10W,TP,1608	1	SA
....4	R3038	2007-000084	R-CHIP;4.7Kohm,5%,1/10W,TP,1608	1	SA
....4	R3070	2007-000084	R-CHIP;4.7Kohm,5%,1/10W,TP,1608	1	SA
....4	R3079	2007-000084	R-CHIP;4.7Kohm,5%,1/10W,TP,1608	1	SA

ELECTRONIC SERVICE TIRGOVISTE

Level	Loc. No.	Code No.	Description & Specification	Q'ty	SA/SNA
....4	R3080	2007-000084	R-CHIP;4.7Kohm,5%,1/10W,TP,1608	1	SA
....4	R3081	2007-000084	R-CHIP;4.7Kohm,5%,1/10W,TP,1608	1	SA
....4	R3082	2007-000084	R-CHIP;4.7Kohm,5%,1/10W,TP,1608	1	SA
....4	R3086	2007-000084	R-CHIP;4.7Kohm,5%,1/10W,TP,1608	1	SA
....4	R3087	2007-000084	R-CHIP;4.7Kohm,5%,1/10W,TP,1608	1	SA
....4	R3108	2007-000084	R-CHIP;4.7Kohm,5%,1/10W,TP,1608	1	SA
....4	R3109	2007-000084	R-CHIP;4.7Kohm,5%,1/10W,TP,1608	1	SA
....4	R3110	2007-000084	R-CHIP;4.7Kohm,5%,1/10W,TP,1608	1	SA
....4	R3111	2007-000084	R-CHIP;4.7Kohm,5%,1/10W,TP,1608	1	SA
....4	R3112	2007-000084	R-CHIP;4.7Kohm,5%,1/10W,TP,1608	1	SA
....4	R3113	2007-000084	R-CHIP;4.7Kohm,5%,1/10W,TP,1608	1	SA
....4	R3114	2007-000084	R-CHIP;4.7Kohm,5%,1/10W,TP,1608	1	SA
....4	R3116	2007-000084	R-CHIP;4.7Kohm,5%,1/10W,TP,1608	1	SA
....4	R3129	2007-000084	R-CHIP;4.7Kohm,5%,1/10W,TP,1608	1	SA
....4	R3134	2007-000084	R-CHIP;4.7Kohm,5%,1/10W,TP,1608	1	SA
....4	R3137	2007-000084	R-CHIP;4.7Kohm,5%,1/10W,TP,1608	1	SA
....4	R4036	2007-000084	R-CHIP;4.7Kohm,5%,1/10W,TP,1608	1	SA
....4	R4037	2007-000084	R-CHIP;4.7Kohm,5%,1/10W,TP,1608	1	SA
....4	R4098	2007-000084	R-CHIP;4.7Kohm,5%,1/10W,TP,1608	1	SA
....4	R4123	2007-000084	R-CHIP;4.7Kohm,5%,1/10W,TP,1608	1	SA
....4	R5064	2007-000084	R-CHIP;4.7Kohm,5%,1/10W,TP,1608	1	SA
....4	R5119	2007-000084	R-CHIP;4.7Kohm,5%,1/10W,TP,1608	1	SA
....4	R2028	2007-000087	R-CHIP;6.8Kohm,5%,1/10W,TP,1608	1	SA
....4	R2061	2007-000087	R-CHIP;6.8Kohm,5%,1/10W,TP,1608	1	SA
....4	R1015	2007-000090	R-CHIP;10Kohm,5%,1/10W,TP,1608	1	SA
....4	R1016	2007-000090	R-CHIP;10Kohm,5%,1/10W,TP,1608	1	SA
....4	R1038	2007-000090	R-CHIP;10Kohm,5%,1/10W,TP,1608	1	SA
....4	R1039	2007-000090	R-CHIP;10Kohm,5%,1/10W,TP,1608	1	SA
....4	R1041	2007-000090	R-CHIP;10Kohm,5%,1/10W,TP,1608	1	SA
....4	R1051	2007-000090	R-CHIP;10Kohm,5%,1/10W,TP,1608	1	SA
....4	R1067	2007-000090	R-CHIP;10Kohm,5%,1/10W,TP,1608	1	SA
....4	R1080	2007-000090	R-CHIP;10Kohm,5%,1/10W,TP,1608	1	SA
....4	R1101	2007-000090	R-CHIP;10Kohm,5%,1/10W,TP,1608	1	SA
....4	R1102	2007-000090	R-CHIP;10Kohm,5%,1/10W,TP,1608	1	SA
....4	R1103	2007-000090	R-CHIP;10Kohm,5%,1/10W,TP,1608	1	SA
....4	R1104	2007-000090	R-CHIP;10Kohm,5%,1/10W,TP,1608	1	SA
....4	R1105	2007-000090	R-CHIP;10Kohm,5%,1/10W,TP,1608	1	SA
....4	R2002	2007-000090	R-CHIP;10Kohm,5%,1/10W,TP,1608	1	SA
....4	R2003	2007-000090	R-CHIP;10Kohm,5%,1/10W,TP,1608	1	SA
....4	R2013	2007-000090	R-CHIP;10Kohm,5%,1/10W,TP,1608	1	SA
....4	R2044	2007-000090	R-CHIP;10Kohm,5%,1/10W,TP,1608	1	SA
....4	R2045	2007-000090	R-CHIP;10Kohm,5%,1/10W,TP,1608	1	SA
....4	R2057	2007-000090	R-CHIP;10Kohm,5%,1/10W,TP,1608	1	SA
....4	R2065	2007-000090	R-CHIP;10Kohm,5%,1/10W,TP,1608	1	SA
....4	R3005	2007-000090	R-CHIP;10Kohm,5%,1/10W,TP,1608	1	SA
....4	R3006	2007-000090	R-CHIP;10Kohm,5%,1/10W,TP,1608	1	SA
....4	R3007	2007-000090	R-CHIP;10Kohm,5%,1/10W,TP,1608	1	SA
....4	R3075	2007-000090	R-CHIP;10Kohm,5%,1/10W,TP,1608	1	SA
....4	R3076	2007-000090	R-CHIP;10Kohm,5%,1/10W,TP,1608	1	SA
....4	R3083	2007-000090	R-CHIP;10Kohm,5%,1/10W,TP,1608	1	SA
....4	R3084	2007-000090	R-CHIP;10Kohm,5%,1/10W,TP,1608	1	SA
....4	R3085	2007-000090	R-CHIP;10Kohm,5%,1/10W,TP,1608	1	SA
....4	R3131	2007-000090	R-CHIP;10Kohm,5%,1/10W,TP,1608	1	SA
....4	R3140	2007-000090	R-CHIP;10Kohm,5%,1/10W,TP,1608	1	SA
....4	R4118	2007-000090	R-CHIP;10Kohm,5%,1/10W,TP,1608	1	SA
....4	R4119	2007-000090	R-CHIP;10Kohm,5%,1/10W,TP,1608	1	SA
....4	R5004	2007-000090	R-CHIP;10Kohm,5%,1/10W,TP,1608	1	SA
....4	R5044	2007-000090	R-CHIP;10Kohm,5%,1/10W,TP,1608	1	SA
....4	R1070	2007-000093	R-CHIP;20Kohm,5%,1/10W,TP,1608	1	SA
....4	R1071	2007-000093	R-CHIP;20Kohm,5%,1/10W,TP,1608	1	SA

ELECTRONIC SERVICE TIRGOVISTE

Level	Loc. No.	Code No.	Description & Specification	Q'ty	SA/SNA
....4	R3004	2007-000094	R-CHIP;22Kohm,5%,1/10W,TP,1608	1	SA
....4	R1062	2007-000097	R-CHIP;47Kohm,5%,1/10W,TP,1608	1	SA
....4	R1068	2007-000097	R-CHIP;47Kohm,5%,1/10W,TP,1608	1	SA
....4	R1075	2007-000097	R-CHIP;47Kohm,5%,1/10W,TP,1608	1	SA
....4	R1079	2007-000097	R-CHIP;47Kohm,5%,1/10W,TP,1608	1	SA
....4	R2010	2007-000097	R-CHIP;47Kohm,5%,1/10W,TP,1608	1	SA
....4	R2011	2007-000097	R-CHIP;47Kohm,5%,1/10W,TP,1608	1	SA
....4	R2012	2007-000097	R-CHIP;47Kohm,5%,1/10W,TP,1608	1	SA
....4	R3099	2007-000097	R-CHIP;47Kohm,5%,1/10W,TP,1608	1	SA
....4	R4124_26	2007-000097	R-CHIP;47Kohm,5%,1/10W,TP,1608	1	SA
....4	R1001	2007-000100	R-CHIP;68Kohm,5%,1/10W,TP,1608	1	SA
....4	R1002	2007-000100	R-CHIP;68Kohm,5%,1/10W,TP,1608	1	SA
....4	R1003	2007-000100	R-CHIP;68Kohm,5%,1/10W,TP,1608	1	SA
....4	R1004	2007-000100	R-CHIP;68Kohm,5%,1/10W,TP,1608	1	SA
....4	R1005	2007-000100	R-CHIP;68Kohm,5%,1/10W,TP,1608	1	SA
....4	R1006	2007-000100	R-CHIP;68Kohm,5%,1/10W,TP,1608	1	SA
....4	R1007	2007-000100	R-CHIP;68Kohm,5%,1/10W,TP,1608	1	SA
....4	R1008	2007-000100	R-CHIP;68Kohm,5%,1/10W,TP,1608	1	SA
....4	R1019	2007-000100	R-CHIP;68Kohm,5%,1/10W,TP,1608	1	SA
....4	R1020	2007-000100	R-CHIP;68Kohm,5%,1/10W,TP,1608	1	SA
....4	R1021	2007-000100	R-CHIP;68Kohm,5%,1/10W,TP,1608	1	SA
....4	R1022	2007-000100	R-CHIP;68Kohm,5%,1/10W,TP,1608	1	SA
....4	R1023	2007-000100	R-CHIP;68Kohm,5%,1/10W,TP,1608	1	SA
....4	R1024	2007-000100	R-CHIP;68Kohm,5%,1/10W,TP,1608	1	SA
....4	R1025	2007-000100	R-CHIP;68Kohm,5%,1/10W,TP,1608	1	SA
....4	R1026	2007-000100	R-CHIP;68Kohm,5%,1/10W,TP,1608	1	SA
....4	R1027	2007-000100	R-CHIP;68Kohm,5%,1/10W,TP,1608	1	SA
....4	R1028	2007-000100	R-CHIP;68Kohm,5%,1/10W,TP,1608	1	SA
....4	R1029	2007-000100	R-CHIP;68Kohm,5%,1/10W,TP,1608	1	SA
....4	R1030	2007-000100	R-CHIP;68Kohm,5%,1/10W,TP,1608	1	SA
....4	R1043	2007-000100	R-CHIP;68Kohm,5%,1/10W,TP,1608	1	SA
....4	R1044	2007-000100	R-CHIP;68Kohm,5%,1/10W,TP,1608	1	SA
....4	R1045	2007-000100	R-CHIP;68Kohm,5%,1/10W,TP,1608	1	SA
....4	R1046	2007-000100	R-CHIP;68Kohm,5%,1/10W,TP,1608	1	SA
....4	R1034	2007-000102	R-CHIP;100Kohm,5%,1/10W,TP,1608	1	SA
....4	R1064	2007-000102	R-CHIP;100Kohm,5%,1/10W,TP,1608	1	SA
....4	R1065	2007-000102	R-CHIP;100Kohm,5%,1/10W,TP,1608	1	SA
....4	R1069	2007-000102	R-CHIP;100Kohm,5%,1/10W,TP,1608	1	SA
....4	R1072	2007-000102	R-CHIP;100Kohm,5%,1/10W,TP,1608	1	SA
....4	R1073	2007-000107	R-CHIP;470Kohm,5%,1/10W,TP,1608	1	SA
....4	R4021	2007-000113	R-CHIP;33ohm,5%,1/10W,TP,1608	1	SA
....4	R4022	2007-000113	R-CHIP;33ohm,5%,1/10W,TP,1608	1	SA
....4	R4023	2007-000113	R-CHIP;33ohm,5%,1/10W,TP,1608	1	SA
....4	R4024	2007-000113	R-CHIP;33ohm,5%,1/10W,TP,1608	1	SA
....4	R1036	2007-000119	R-CHIP;560ohm,5%,1/10W,TP,1608	1	SA
....4	R1078	2007-000122	R-CHIP;1.2Kohm,5%,1/10W,TP,1608	1	SA
....4	R5053	2007-000123	R-CHIP;1.5Kohm,5%,1/10W,TP,1608	1	SA
....4	R5054	2007-000123	R-CHIP;1.5Kohm,5%,1/10W,TP,1608	1	SA
....4	R5055	2007-000123	R-CHIP;1.5Kohm,5%,1/10W,TP,1608	1	SA
....4	R1096	2007-000125	R-CHIP;3.9Kohm,5%,1/10W,TP,1608	1	SA
....4	R1076	2007-000129	R-CHIP;27Kohm,5%,1/10W,TP,1608	1	SA
....4	R5015	2007-000133	R-CHIP;330Kohm,5%,1/10W,TP,1608	1	SA
....4	R2098	2007-000309	R-CHIP;10ohm,5%,1/10W,TP,1608	1	SA
....4	R2099	2007-000309	R-CHIP;10ohm,5%,1/10W,TP,1608	1	SA
....4	R2100	2007-000309	R-CHIP;10ohm,5%,1/10W,TP,1608	1	SA
....4	R2101	2007-000309	R-CHIP;10ohm,5%,1/10W,TP,1608	1	SA
....4	R2102	2007-000309	R-CHIP;10ohm,5%,1/10W,TP,1608	1	SA
....4	R2103	2007-000309	R-CHIP;10ohm,5%,1/10W,TP,1608	1	SA
....4	R2104	2007-000309	R-CHIP;10ohm,5%,1/10W,TP,1608	1	SA
....4	R2105	2007-000309	R-CHIP;10ohm,5%,1/10W,TP,1608	1	SA

ELECTRONIC SERVICE TIRGOVISTE

Level	Loc. No.	Code No.	Description & Specification	Q'ty	SA/SNA
....4	R3044	2007-000309	R-CHIP;10ohm,5%,1/10W,TP,1608	1	SA
....4	R3048	2007-000309	R-CHIP;10ohm,5%,1/10W,TP,1608	1	SA
....4	R3049_1M	2007-000309	R-CHIP;10ohm,5%,1/10W,TP,1608	1	SA
....4	R3050_1M	2007-000309	R-CHIP;10ohm,5%,1/10W,TP,1608	1	SA
....4	R3056	2007-000309	R-CHIP;10ohm,5%,1/10W,TP,1608	1	SA
....4	R3060	2007-000309	R-CHIP;10ohm,5%,1/10W,TP,1608	1	SA
....4	R3061	2007-000309	R-CHIP;10ohm,5%,1/10W,TP,1608	1	SA
....4	R3064	2007-000309	R-CHIP;10ohm,5%,1/10W,TP,1608	1	SA
....4	R3066	2007-000309	R-CHIP;10ohm,5%,1/10W,TP,1608	1	SA
....4	R3067	2007-000309	R-CHIP;10ohm,5%,1/10W,TP,1608	1	SA
....4	R3068	2007-000309	R-CHIP;10ohm,5%,1/10W,TP,1608	1	SA
....4	R3069	2007-000309	R-CHIP;10ohm,5%,1/10W,TP,1608	1	SA
....4	R3091	2007-000309	R-CHIP;10ohm,5%,1/10W,TP,1608	1	SA
....4	R3092	2007-000309	R-CHIP;10ohm,5%,1/10W,TP,1608	1	SA
....4	R3093	2007-000309	R-CHIP;10ohm,5%,1/10W,TP,1608	1	SA
....4	R3094	2007-000309	R-CHIP;10ohm,5%,1/10W,TP,1608	1	SA
....4	R3095	2007-000309	R-CHIP;10ohm,5%,1/10W,TP,1608	1	SA
....4	R3096	2007-000309	R-CHIP;10ohm,5%,1/10W,TP,1608	1	SA
....4	R3097	2007-000309	R-CHIP;10ohm,5%,1/10W,TP,1608	1	SA
....4	R3098	2007-000309	R-CHIP;10ohm,5%,1/10W,TP,1608	1	SA
....4	R5045	2007-000309	R-CHIP;10ohm,5%,1/10W,TP,1608	1	SA
....4	R5046	2007-000309	R-CHIP;10ohm,5%,1/10W,TP,1608	1	SA
....4	R5047	2007-000309	R-CHIP;10ohm,5%,1/10W,TP,1608	1	SA
....4	R2017	2007-000458	R-CHIP;18Kohm,5%,1/10W,TP,1608	1	SA
....4	R2052	2007-000458	R-CHIP;18Kohm,5%,1/10W,TP,1608	1	SA
....4	R3012	2007-000704	R-CHIP;3.6Kohm,5%,1/10W,TP,1608	1	SA
....4	R3013	2007-000704	R-CHIP;3.6Kohm,5%,1/10W,TP,1608	1	SA
....4	R1077	2007-000708	R-CHIP;3.9Kohm,1%,1/10W,TP,1608	1	SA
....4	R2019	2007-000950	R-CHIP;47ohm,5%,1/4W,TP,3216	1	SA
....4	R2020	2007-000950	R-CHIP;47ohm,5%,1/4W,TP,3216	1	SA
....4	R2021	2007-000950	R-CHIP;47ohm,5%,1/4W,TP,3216	1	SA
....4	R2066	2007-000950	R-CHIP;47ohm,5%,1/4W,TP,3216	1	SA
....4	R2067	2007-000950	R-CHIP;47ohm,5%,1/4W,TP,3216	1	SA
....4	R2076	2007-000950	R-CHIP;47ohm,5%,1/4W,TP,3216	1	SA
....4	R2078	2007-000950	R-CHIP;47ohm,5%,1/4W,TP,3216	1	SA
....4	R2082	2007-000950	R-CHIP;47ohm,5%,1/4W,TP,3216	1	SA
....4	R2083	2007-000950	R-CHIP;47ohm,5%,1/4W,TP,3216	1	SA
....4	R2094	2007-000950	R-CHIP;47ohm,5%,1/4W,TP,3216	1	SA
....4	R2095	2007-000950	R-CHIP;47ohm,5%,1/4W,TP,3216	1	SA
....4	R5035	2007-001014	R-CHIP;51OHM,5%,1/10W,TP,1608	1	SA
....4	R5039	2007-001014	R-CHIP;51OHM,5%,1/10W,TP,1608	1	SA
....4	R2014	2007-001164	R-CHIP;75ohm,1%,1/10W,TP,1608	1	SA
....4	R2015	2007-001164	R-CHIP;75ohm,1%,1/10W,TP,1608	1	SA
....4	R2025	2007-001164	R-CHIP;75ohm,1%,1/10W,TP,1608	1	SA
....4	R2026	2007-001164	R-CHIP;75ohm,1%,1/10W,TP,1608	1	SA
....4	R2027	2007-001164	R-CHIP;75ohm,1%,1/10W,TP,1608	1	SA
....4	R2032	2007-001164	R-CHIP;75ohm,1%,1/10W,TP,1608	1	SA
....4	R2062	2007-001164	R-CHIP;75ohm,1%,1/10W,TP,1608	1	SA
....4	R2072_26	2007-001164	R-CHIP;75ohm,1%,1/10W,TP,1608	1	SA
....4	R2073_26	2007-001164	R-CHIP;75ohm,1%,1/10W,TP,1608	1	SA
....4	R2085	2007-001164	R-CHIP;75ohm,1%,1/10W,TP,1608	1	SA
....4	R2086	2007-001164	R-CHIP;75ohm,1%,1/10W,TP,1608	1	SA
....4	R2087	2007-001164	R-CHIP;75ohm,1%,1/10W,TP,1608	1	SA
....4	R2092_26	2007-001164	R-CHIP;75ohm,1%,1/10W,TP,1608	1	SA
....4	R2036	2007-001167	R-CHIP;75ohm,5%,1/10W,TP,1608	1	SA
....4	R2038	2007-001167	R-CHIP;75ohm,5%,1/10W,TP,1608	1	SA
....4	R2041	2007-001167	R-CHIP;75ohm,5%,1/10W,TP,1608	1	SA
....4	R2046	2007-001167	R-CHIP;75ohm,5%,1/10W,TP,1608	1	SA
....4	R2047	2007-001167	R-CHIP;75ohm,5%,1/10W,TP,1608	1	SA
....4	R2048	2007-001167	R-CHIP;75ohm,5%,1/10W,TP,1608	1	SA

ELECTRONIC SERVICE TARGOVISTE

Level	Loc. No.	Code No.	Description & Specification	Q'ty	SA/SNA
....4	R2054	2007-001167	R-CHIP;75ohm,5%,1/10W,TP,1608	1	SA
....4	R2059	2007-001167	R-CHIP;75ohm,5%,1/10W,TP,1608	1	SA
....4	R5016	2007-001167	R-CHIP;75ohm,5%,1/10W,TP,1608	1	SA
....4	R1083	2007-008720	R-CHIP;4.7ohm,1%,1/4W,TP,3216	1	SA
....4	R1088	2007-008720	R-CHIP;4.7ohm,1%,1/4W,TP,3216	1	SA
....4	R1094	2007-008720	R-CHIP;4.7ohm,1%,1/4W,TP,3216	1	SA
....4	R1097	2007-008720	R-CHIP;4.7ohm,1%,1/4W,TP,3216	1	SA
....4	RA5001	2011-000585	R-NET;47ohm,5%,1/16W,L,CHIP,8P,TP,3.2x1.	1	SA
....4	RA5002	2011-000585	R-NET;47ohm,5%,1/16W,L,CHIP,8P,TP,3.2x1.	1	SA
....4	RA5003	2011-000585	R-NET;47ohm,5%,1/16W,L,CHIP,8P,TP,3.2x1.	1	SA
....4	RA5004	2011-000585	R-NET;47ohm,5%,1/16W,L,CHIP,8P,TP,3.2x1.	1	SA
....4	RA5005	2011-000585	R-NET;47ohm,5%,1/16W,L,CHIP,8P,TP,3.2x1.	1	SA
....4	RA5006	2011-000585	R-NET;47ohm,5%,1/16W,L,CHIP,8P,TP,3.2x1.	1	SA
....4	RA5007	2011-000585	R-NET;47ohm,5%,1/16W,L,CHIP,8P,TP,3.2x1.	1	SA
....4	RA5010	2011-000585	R-NET;47ohm,5%,1/16W,L,CHIP,8P,TP,3.2x1.	1	SA
....4	RA3004	2011-000651	R-NET;10ohm,5%,1/16W,L,CHIP,8P,TP,3216	1	SA
....4	RA3005	2011-000651	R-NET;10ohm,5%,1/16W,L,CHIP,8P,TP,3216	1	SA
....4	RA3007	2011-000651	R-NET;10ohm,5%,1/16W,L,CHIP,8P,TP,3216	1	SA
....4	RA3008	2011-000651	R-NET;10ohm,5%,1/16W,L,CHIP,8P,TP,3216	1	SA
....4	RA3009	2011-000651	R-NET;10ohm,5%,1/16W,L,CHIP,8P,TP,3216	1	SA
....4	RA3011	2011-000651	R-NET;10ohm,5%,1/16W,L,CHIP,8P,TP,3216	1	SA
....4	RA3001	2011-001093	R-NET;100OHM,5%,1/16W,L,CHIP,8P,TP,3216	1	SA
....4	RA3002	2011-001093	R-NET;100OHM,5%,1/16W,L,CHIP,8P,TP,3216	1	SA
....4	RA3003	2011-001093	R-NET;100OHM,5%,1/16W,L,CHIP,8P,TP,3216	1	SA
....4	RA3006	2011-001093	R-NET;100OHM,5%,1/16W,L,CHIP,8P,TP,3216	1	SA
....4	RA3010	2011-001093	R-NET;100OHM,5%,1/16W,L,CHIP,8P,TP,3216	1	SA
....4	RA3012	2011-001093	R-NET;100OHM,5%,1/16W,L,CHIP,8P,TP,3216	1	SA
....4	RA3013	2011-001093	R-NET;100OHM,5%,1/16W,L,CHIP,8P,TP,3216	1	SA
....4	RA3014	2011-001093	R-NET;100OHM,5%,1/16W,L,CHIP,8P,TP,3216	1	SA
....4	RA3015	2011-001093	R-NET;100OHM,5%,1/16W,L,CHIP,8P,TP,3216	1	SA
....4	RA3016	2011-001093	R-NET;100OHM,5%,1/16W,L,CHIP,8P,TP,3216	1	SA
....4	RA3017	2011-001093	R-NET;100OHM,5%,1/16W,L,CHIP,8P,TP,3216	1	SA
....4	RA3018	2011-001093	R-NET;100OHM,5%,1/16W,L,CHIP,8P,TP,3216	1	SA
....4	RA3019	2011-001093	R-NET;100OHM,5%,1/16W,L,CHIP,8P,TP,3216	1	SA
....4	RA3020	2011-001093	R-NET;100OHM,5%,1/16W,L,CHIP,8P,TP,3216	1	SA
....4	RA4001	2011-001093	R-NET;100OHM,5%,1/16W,L,CHIP,8P,TP,3216	1	SA
....4	RA4002	2011-001093	R-NET;100OHM,5%,1/16W,L,CHIP,8P,TP,3216	1	SA
....4	C1158	2203-000125	C-CER,CHIP;1.2nF,10%,50V,X7R,TP,1608,-	1	SA
....4	C1037	2203-000140	C-CER,CHIP;1.5nF,10%,50V,X7R,1608	1	SA
....4	C1062	2203-000140	C-CER,CHIP;1.5nF,10%,50V,X7R,1608	1	SA
....4	C1004	2203-000189	C-CER,CHIP;100nF,+80-20%,25V,Y5V,1608	1	SA
....4	C1006	2203-000189	C-CER,CHIP;100nF,+80-20%,25V,Y5V,1608	1	SA
....4	C1008	2203-000189	C-CER,CHIP;100nF,+80-20%,25V,Y5V,1608	1	SA
....4	C1016	2203-000189	C-CER,CHIP;100nF,+80-20%,25V,Y5V,1608	1	SA
....4	C1021	2203-000189	C-CER,CHIP;100nF,+80-20%,25V,Y5V,1608	1	SA
....4	C1025	2203-000189	C-CER,CHIP;100nF,+80-20%,25V,Y5V,1608	1	SA
....4	C1027	2203-000189	C-CER,CHIP;100nF,+80-20%,25V,Y5V,1608	1	SA
....4	C1043	2203-000189	C-CER,CHIP;100nF,+80-20%,25V,Y5V,1608	1	SA
....4	C1046	2203-000189	C-CER,CHIP;100nF,+80-20%,25V,Y5V,1608	1	SA
....4	C1052	2203-000189	C-CER,CHIP;100nF,+80-20%,25V,Y5V,1608	1	SA
....4	C1053	2203-000189	C-CER,CHIP;100nF,+80-20%,25V,Y5V,1608	1	SA
....4	C1054	2203-000189	C-CER,CHIP;100nF,+80-20%,25V,Y5V,1608	1	SA
....4	C1055	2203-000189	C-CER,CHIP;100nF,+80-20%,25V,Y5V,1608	1	SA
....4	C1075	2203-000189	C-CER,CHIP;100nF,+80-20%,25V,Y5V,1608	1	SA
....4	C1084	2203-000189	C-CER,CHIP;100nF,+80-20%,25V,Y5V,1608	1	SA
....4	C1086	2203-000189	C-CER,CHIP;100nF,+80-20%,25V,Y5V,1608	1	SA
....4	C1087	2203-000189	C-CER,CHIP;100nF,+80-20%,25V,Y5V,1608	1	SA
....4	C1097	2203-000189	C-CER,CHIP;100nF,+80-20%,25V,Y5V,1608	1	SA
....4	C1098	2203-000189	C-CER,CHIP;100nF,+80-20%,25V,Y5V,1608	1	SA
....4	C1103	2203-000189	C-CER,CHIP;100nF,+80-20%,25V,Y5V,1608	1	SA

ELECTRONIC SERVICE TIRGOVISTE

Level	Loc. No.	Code No.	Description & Specification	Q'ty	SA/SNA
....4	C1105	2203-000189	C-CER,CHIP;100nF,+80-20%,25V,Y5V,1608	1	SA
....4	C1109	2203-000189	C-CER,CHIP;100nF,+80-20%,25V,Y5V,1608	1	SA
....4	C1124	2203-000189	C-CER,CHIP;100nF,+80-20%,25V,Y5V,1608	1	SA
....4	C1132	2203-000189	C-CER,CHIP;100nF,+80-20%,25V,Y5V,1608	1	SA
....4	C1133	2203-000189	C-CER,CHIP;100nF,+80-20%,25V,Y5V,1608	1	SA
....4	C1141	2203-000189	C-CER,CHIP;100nF,+80-20%,25V,Y5V,1608	1	SA
....4	C1159	2203-000189	C-CER,CHIP;100nF,+80-20%,25V,Y5V,1608	1	SA
....4	C1168	2203-000189	C-CER,CHIP;100nF,+80-20%,25V,Y5V,1608	1	SA
....4	C2002	2203-000189	C-CER,CHIP;100nF,+80-20%,25V,Y5V,1608	1	SA
....4	C2018	2203-000189	C-CER,CHIP;100nF,+80-20%,25V,Y5V,1608	1	SA
....4	C3001	2203-000189	C-CER,CHIP;100nF,+80-20%,25V,Y5V,1608	1	SA
....4	C3005	2203-000189	C-CER,CHIP;100nF,+80-20%,25V,Y5V,1608	1	SA
....4	C3034	2203-000189	C-CER,CHIP;100nF,+80-20%,25V,Y5V,1608	1	SA
....4	C4016	2203-000189	C-CER,CHIP;100nF,+80-20%,25V,Y5V,1608	1	SA
....4	C4017	2203-000189	C-CER,CHIP;100nF,+80-20%,25V,Y5V,1608	1	SA
....4	C4018	2203-000189	C-CER,CHIP;100nF,+80-20%,25V,Y5V,1608	1	SA
....4	C4019	2203-000189	C-CER,CHIP;100nF,+80-20%,25V,Y5V,1608	1	SA
....4	C4020	2203-000189	C-CER,CHIP;100nF,+80-20%,25V,Y5V,1608	1	SA
....4	C4021	2203-000189	C-CER,CHIP;100nF,+80-20%,25V,Y5V,1608	1	SA
....4	C4022	2203-000189	C-CER,CHIP;100nF,+80-20%,25V,Y5V,1608	1	SA
....4	C4025	2203-000189	C-CER,CHIP;100nF,+80-20%,25V,Y5V,1608	1	SA
....4	C4026	2203-000189	C-CER,CHIP;100nF,+80-20%,25V,Y5V,1608	1	SA
....4	C4027	2203-000189	C-CER,CHIP;100nF,+80-20%,25V,Y5V,1608	1	SA
....4	C4028	2203-000189	C-CER,CHIP;100nF,+80-20%,25V,Y5V,1608	1	SA
....4	C4029	2203-000189	C-CER,CHIP;100nF,+80-20%,25V,Y5V,1608	1	SA
....4	C4031	2203-000189	C-CER,CHIP;100nF,+80-20%,25V,Y5V,1608	1	SA
....4	C4032	2203-000189	C-CER,CHIP;100nF,+80-20%,25V,Y5V,1608	1	SA
....4	C4034	2203-000189	C-CER,CHIP;100nF,+80-20%,25V,Y5V,1608	1	SA
....4	C4035	2203-000189	C-CER,CHIP;100nF,+80-20%,25V,Y5V,1608	1	SA
....4	C4036	2203-000189	C-CER,CHIP;100nF,+80-20%,25V,Y5V,1608	1	SA
....4	C4038	2203-000189	C-CER,CHIP;100nF,+80-20%,25V,Y5V,1608	1	SA
....4	C4039	2203-000189	C-CER,CHIP;100nF,+80-20%,25V,Y5V,1608	1	SA
....4	C4040	2203-000189	C-CER,CHIP;100nF,+80-20%,25V,Y5V,1608	1	SA
....4	C4041	2203-000189	C-CER,CHIP;100nF,+80-20%,25V,Y5V,1608	1	SA
....4	C4042	2203-000189	C-CER,CHIP;100nF,+80-20%,25V,Y5V,1608	1	SA
....4	C4043	2203-000189	C-CER,CHIP;100nF,+80-20%,25V,Y5V,1608	1	SA
....4	C4045	2203-000189	C-CER,CHIP;100nF,+80-20%,25V,Y5V,1608	1	SA
....4	C4046	2203-000189	C-CER,CHIP;100nF,+80-20%,25V,Y5V,1608	1	SA
....4	C4048	2203-000189	C-CER,CHIP;100nF,+80-20%,25V,Y5V,1608	1	SA
....4	C4049	2203-000189	C-CER,CHIP;100nF,+80-20%,25V,Y5V,1608	1	SA
....4	C4052	2203-000189	C-CER,CHIP;100nF,+80-20%,25V,Y5V,1608	1	SA
....4	C4053	2203-000189	C-CER,CHIP;100nF,+80-20%,25V,Y5V,1608	1	SA
....4	C4054	2203-000189	C-CER,CHIP;100nF,+80-20%,25V,Y5V,1608	1	SA
....4	C4055	2203-000189	C-CER,CHIP;100nF,+80-20%,25V,Y5V,1608	1	SA
....4	C4056	2203-000189	C-CER,CHIP;100nF,+80-20%,25V,Y5V,1608	1	SA
....4	C4059	2203-000189	C-CER,CHIP;100nF,+80-20%,25V,Y5V,1608	1	SA
....4	C4060	2203-000189	C-CER,CHIP;100nF,+80-20%,25V,Y5V,1608	1	SA
....4	C4061	2203-000189	C-CER,CHIP;100nF,+80-20%,25V,Y5V,1608	1	SA
....4	C4062	2203-000189	C-CER,CHIP;100nF,+80-20%,25V,Y5V,1608	1	SA
....4	C4063	2203-000189	C-CER,CHIP;100nF,+80-20%,25V,Y5V,1608	1	SA
....4	C4067	2203-000189	C-CER,CHIP;100nF,+80-20%,25V,Y5V,1608	1	SA
....4	C4068	2203-000189	C-CER,CHIP;100nF,+80-20%,25V,Y5V,1608	1	SA
....4	C4069	2203-000189	C-CER,CHIP;100nF,+80-20%,25V,Y5V,1608	1	SA
....4	C4070	2203-000189	C-CER,CHIP;100nF,+80-20%,25V,Y5V,1608	1	SA
....4	C4071	2203-000189	C-CER,CHIP;100nF,+80-20%,25V,Y5V,1608	1	SA
....4	C4073	2203-000189	C-CER,CHIP;100nF,+80-20%,25V,Y5V,1608	1	SA
....4	C4076	2203-000189	C-CER,CHIP;100nF,+80-20%,25V,Y5V,1608	1	SA
....4	C4077	2203-000189	C-CER,CHIP;100nF,+80-20%,25V,Y5V,1608	1	SA
....4	C4080	2203-000189	C-CER,CHIP;100nF,+80-20%,25V,Y5V,1608	1	SA
....4	C4081	2203-000189	C-CER,CHIP;100nF,+80-20%,25V,Y5V,1608	1	SA

ELECTRONIC SERVICE TIRGOVISTE

Level	Loc. No.	Code No.	Description & Specification	Q'ty	SA/SNA
....4	C4083	2203-000189	C-CER,CHIP;100nF,+80-20%,25V,Y5V,1608	1	SA
....4	C4084	2203-000189	C-CER,CHIP;100nF,+80-20%,25V,Y5V,1608	1	SA
....4	C4085	2203-000189	C-CER,CHIP;100nF,+80-20%,25V,Y5V,1608	1	SA
....4	C4086	2203-000189	C-CER,CHIP;100nF,+80-20%,25V,Y5V,1608	1	SA
....4	C4095	2203-000189	C-CER,CHIP;100nF,+80-20%,25V,Y5V,1608	1	SA
....4	C4128	2203-000189	C-CER,CHIP;100nF,+80-20%,25V,Y5V,1608	1	SA
....4	C5026	2203-000189	C-CER,CHIP;100nF,+80-20%,25V,Y5V,1608	1	SA
....4	C5038	2203-000189	C-CER,CHIP;100nF,+80-20%,25V,Y5V,1608	1	SA
....4	C5043	2203-000189	C-CER,CHIP;100nF,+80-20%,25V,Y5V,1608	1	SA
....4	C5022	2203-000221	C-CER,CHIP;100nF,20%,50V,Y5V,TP,3216	1	SA
....4	C1050	2203-000236	C-CER,CHIP;0.1nF,5%,50V,C0G,1608	1	SA
....4	C1134	2203-000236	C-CER,CHIP;0.1nF,5%,50V,C0G,1608	1	SA
....4	C1135	2203-000236	C-CER,CHIP;0.1nF,5%,50V,C0G,1608	1	SA
....4	C1161	2203-000236	C-CER,CHIP;0.1nF,5%,50V,C0G,1608	1	SA
....4	C1162	2203-000236	C-CER,CHIP;0.1nF,5%,50V,C0G,1608	1	SA
....4	C1163	2203-000236	C-CER,CHIP;0.1nF,5%,50V,C0G,1608	1	SA
....4	C2003	2203-000236	C-CER,CHIP;0.1nF,5%,50V,C0G,1608	1	SA
....4	C2004	2203-000236	C-CER,CHIP;0.1nF,5%,50V,C0G,1608	1	SA
....4	C2005	2203-000236	C-CER,CHIP;0.1nF,5%,50V,C0G,1608	1	SA
....4	C2006	2203-000236	C-CER,CHIP;0.1nF,5%,50V,C0G,1608	1	SA
....4	C2007	2203-000236	C-CER,CHIP;0.1nF,5%,50V,C0G,1608	1	SA
....4	C2011	2203-000236	C-CER,CHIP;0.1nF,5%,50V,C0G,1608	1	SA
....4	C2012	2203-000236	C-CER,CHIP;0.1nF,5%,50V,C0G,1608	1	SA
....4	C2013	2203-000236	C-CER,CHIP;0.1nF,5%,50V,C0G,1608	1	SA
....4	C2014	2203-000236	C-CER,CHIP;0.1nF,5%,50V,C0G,1608	1	SA
....4	C2019	2203-000236	C-CER,CHIP;0.1nF,5%,50V,C0G,1608	1	SA
....4	C2020	2203-000236	C-CER,CHIP;0.1nF,5%,50V,C0G,1608	1	SA
....4	C2022_DE	2203-000236	C-CER,CHIP;0.1nF,5%,50V,C0G,1608	1	SA
....4	C2023	2203-000236	C-CER,CHIP;0.1nF,5%,50V,C0G,1608	1	SA
....4	C2024	2203-000236	C-CER,CHIP;0.1nF,5%,50V,C0G,1608	1	SA
....4	C2025	2203-000236	C-CER,CHIP;0.1nF,5%,50V,C0G,1608	1	SA
....4	C2027	2203-000236	C-CER,CHIP;0.1nF,5%,50V,C0G,1608	1	SA
....4	C2028	2203-000236	C-CER,CHIP;0.1nF,5%,50V,C0G,1608	1	SA
....4	C2032_26	2203-000236	C-CER,CHIP;0.1nF,5%,50V,C0G,1608	1	SA
....4	C3024	2203-000236	C-CER,CHIP;0.1nF,5%,50V,C0G,1608	1	SA
....4	C3025	2203-000236	C-CER,CHIP;0.1nF,5%,50V,C0G,1608	1	SA
....4	C5059	2203-000236	C-CER,CHIP;0.1nF,5%,50V,C0G,1608	1	SA
....4	C5068	2203-000236	C-CER,CHIP;0.1nF,5%,50V,C0G,1608	1	SA
....4	C5069	2203-000236	C-CER,CHIP;0.1nF,5%,50V,C0G,1608	1	SA
....4	C5084	2203-000236	C-CER,CHIP;0.1nF,5%,50V,C0G,1608	1	SA
....4	C5085	2203-000236	C-CER,CHIP;0.1nF,5%,50V,C0G,1608	1	SA
....4	C1002	2203-000257	C-CER,CHIP;10nF,10%,50V,X7R,1608	1	SA
....4	C1005	2203-000257	C-CER,CHIP;10nF,10%,50V,X7R,1608	1	SA
....4	C1013	2203-000257	C-CER,CHIP;10nF,10%,50V,X7R,1608	1	SA
....4	C1022	2203-000257	C-CER,CHIP;10nF,10%,50V,X7R,1608	1	SA
....4	C1026	2203-000257	C-CER,CHIP;10nF,10%,50V,X7R,1608	1	SA
....4	C1034	2203-000257	C-CER,CHIP;10nF,10%,50V,X7R,1608	1	SA
....4	C1049	2203-000257	C-CER,CHIP;10nF,10%,50V,X7R,1608	1	SA
....4	C1094	2203-000257	C-CER,CHIP;10nF,10%,50V,X7R,1608	1	SA
....4	C3035	2203-000257	C-CER,CHIP;10nF,10%,50V,X7R,1608	1	SA
....4	C4005	2203-000257	C-CER,CHIP;10nF,10%,50V,X7R,1608	1	SA
....4	C4006	2203-000257	C-CER,CHIP;10nF,10%,50V,X7R,1608	1	SA
....4	C4007	2203-000257	C-CER,CHIP;10nF,10%,50V,X7R,1608	1	SA
....4	C4008	2203-000257	C-CER,CHIP;10nF,10%,50V,X7R,1608	1	SA
....4	C4009	2203-000257	C-CER,CHIP;10nF,10%,50V,X7R,1608	1	SA
....4	C4124	2203-000257	C-CER,CHIP;10nF,10%,50V,X7R,1608	1	SA
....4	C5006	2203-000257	C-CER,CHIP;10nF,10%,50V,X7R,1608	1	SA
....4	C5007	2203-000257	C-CER,CHIP;10nF,10%,50V,X7R,1608	1	SA
....4	C5008	2203-000257	C-CER,CHIP;10nF,10%,50V,X7R,1608	1	SA
....4	C5009	2203-000257	C-CER,CHIP;10nF,10%,50V,X7R,1608	1	SA

ELECTRONIC SERVICE TIRGOVISTE

Level	Loc. No.	Code No.	Description & Specification	Q'ty	SA/SNA
....4	C5010	2203-000257	C-CER,CHIP;10nF,10%,50V,X7R,1608	1	SA
....4	C5017	2203-000257	C-CER,CHIP;10nF,10%,50V,X7R,1608	1	SA
....4	C5036	2203-000257	C-CER,CHIP;10nF,10%,50V,X7R,1608	1	SA
....4	C5040	2203-000257	C-CER,CHIP;10nF,10%,50V,X7R,1608	1	SA
....4	C5061	2203-000257	C-CER,CHIP;10nF,10%,50V,X7R,1608	1	SA
....4	C5062	2203-000257	C-CER,CHIP;10nF,10%,50V,X7R,1608	1	SA
....4	C5064	2203-000257	C-CER,CHIP;10nF,10%,50V,X7R,1608	1	SA
....4	C1110	2203-000426	C-CER,CHIP;0.018nF,5%,50V,C0G,1608	1	SA
....4	C1121	2203-000440	C-CER,CHIP;1nF,10%,50V,X7R,1608	1	SA
....4	C3002	2203-000440	C-CER,CHIP;1nF,10%,50V,X7R,1608	1	SA
....4	C3003	2203-000440	C-CER,CHIP;1nF,10%,50V,X7R,1608	1	SA
....4	C3007	2203-000440	C-CER,CHIP;1nF,10%,50V,X7R,1608	1	SA
....4	C3020	2203-000440	C-CER,CHIP;1nF,10%,50V,X7R,1608	1	SA
....4	C3021	2203-000440	C-CER,CHIP;1nF,10%,50V,X7R,1608	1	SA
....4	C3029	2203-000440	C-CER,CHIP;1nF,10%,50V,X7R,1608	1	SA
....4	C4119	2203-000440	C-CER,CHIP;1nF,10%,50V,X7R,1608	1	SA
....4	C5087	2203-000440	C-CER,CHIP;1nF,10%,50V,X7R,1608	1	SA
....4	C4058	2203-000531	C-CER,CHIP;2.7nF,10%,50V,X7R,1608	1	SA
....4	C4066	2203-000531	C-CER,CHIP;2.7nF,10%,50V,X7R,1608	1	SA
....4	C4001	2203-000552	C-CER,CHIP;0.02nF,5%,50V,C0G,1608	1	SA
....4	C4011	2203-000552	C-CER,CHIP;0.02nF,5%,50V,C0G,1608	1	SA
....4	C1070	2203-000626	C-CER,CHIP;0.022nF,5%,50V,C0G,1608	1	SA
....4	C1082	2203-000626	C-CER,CHIP;0.022nF,5%,50V,C0G,1608	1	SA
....4	C3012	2203-000626	C-CER,CHIP;0.022nF,5%,50V,C0G,1608	1	SA
....4	C3013	2203-000626	C-CER,CHIP;0.022nF,5%,50V,C0G,1608	1	SA
....4	C3030	2203-000626	C-CER,CHIP;0.022nF,5%,50V,C0G,1608	1	SA
....4	C3031	2203-000626	C-CER,CHIP;0.022nF,5%,50V,C0G,1608	1	SA
....4	C1111	2203-000715	C-CER,CHIP;3.3nF,10%,50V,X7R,1608	1	SA
....4	C1142	2203-000783	C-CER,CHIP;0.33nF,5%,50V,C0G,1608	1	SA
....4	C1152	2203-000783	C-CER,CHIP;0.33nF,5%,50V,C0G,1608	1	SA
....4	C2009	2203-000783	C-CER,CHIP;0.33nF,5%,50V,C0G,1608	1	SA
....4	C2010	2203-000783	C-CER,CHIP;0.33nF,5%,50V,C0G,1608	1	SA
....4	C2015	2203-000783	C-CER,CHIP;0.33nF,5%,50V,C0G,1608	1	SA
....4	C2016	2203-000783	C-CER,CHIP;0.33nF,5%,50V,C0G,1608	1	SA
....4	C2026	2203-000783	C-CER,CHIP;0.33nF,5%,50V,C0G,1608	1	SA
....4	C2033_26	2203-000783	C-CER,CHIP;0.33nF,5%,50V,C0G,1608	1	SA
....4	C2034_26	2203-000783	C-CER,CHIP;0.33nF,5%,50V,C0G,1608	1	SA
....4	C2035_26	2203-000783	C-CER,CHIP;0.33nF,5%,50V,C0G,1608	1	SA
....4	C2036_26	2203-000783	C-CER,CHIP;0.33nF,5%,50V,C0G,1608	1	SA
....4	C2037_26	2203-000783	C-CER,CHIP;0.33nF,5%,50V,C0G,1608	1	SA
....4	C5076	2203-000783	C-CER,CHIP;0.33nF,5%,50V,C0G,1608	1	SA
....4	C5077	2203-000783	C-CER,CHIP;0.33nF,5%,50V,C0G,1608	1	SA
....4	C1100	2203-000798	C-CER,CHIP;33nF,10%,16V,X7R,TP,1608,-	1	SA
....4	C1101	2203-000798	C-CER,CHIP;33nF,10%,16V,X7R,TP,1608,-	1	SA
....4	C2029	2203-000815	C-CER,CHIP;0.033nF,5%,50V,C0G,1608	1	SA
....4	C2030	2203-000815	C-CER,CHIP;0.033nF,5%,50V,C0G,1608	1	SA
....4	C2031	2203-000815	C-CER,CHIP;0.033nF,5%,50V,C0G,1608	1	SA
....4	C5056	2203-000815	C-CER,CHIP;0.033nF,5%,50V,C0G,1608	1	SA
....4	C5057	2203-000815	C-CER,CHIP;0.033nF,5%,50V,C0G,1608	1	SA
....4	C5058	2203-000815	C-CER,CHIP;0.033nF,5%,50V,C0G,1608	1	SA
....4	C1119	2203-000888	C-CER,CHIP;4.7nF,10%,50V,X7R,1608	1	SA
....4	C1120	2203-000888	C-CER,CHIP;4.7nF,10%,50V,X7R,1608	1	SA
....4	C4003	2203-000888	C-CER,CHIP;4.7nF,10%,50V,X7R,1608	1	SA
....4	C4004	2203-000888	C-CER,CHIP;4.7nF,10%,50V,X7R,1608	1	SA
....4	C5003	2203-000888	C-CER,CHIP;4.7nF,10%,50V,X7R,1608	1	SA
....4	C5004	2203-000888	C-CER,CHIP;4.7nF,10%,50V,X7R,1608	1	SA
....4	C1063	2203-000972	C-CER,CHIP;47nF,10%,16V,X7R,1608	1	SA
....4	C2008	2203-000998	C-CER,CHIP;0.047nF,5%,50V,C0G,1608	1	SA
....4	C2021	2203-000998	C-CER,CHIP;0.047nF,5%,50V,C0G,1608	1	SA
....4	C5063	2203-000998	C-CER,CHIP;0.047nF,5%,50V,C0G,1608	1	SA

ELECTRONIC SERVICE TIRGOVISTE

Level	Loc. No.	Code No.	Description & Specification	Q'ty	SA/SNA
....4	C1056	2203-001402	C-CER,CHIP;220nF,+80-20%,16V,Y5V,TP,1608	1	SA
....4	C1164	2203-001607	C-CER,CHIP;0.22nF,5%,50V,NP0,1608	1	SA
....4	C1114	2203-001652	C-CER,CHIP;470nF,+80-20%,16V,Y5V,1608	1	SA
....4	C1116	2203-001652	C-CER,CHIP;470nF,+80-20%,16V,Y5V,1608	1	SA
....4	C1038	2203-001656	C-CER,CHIP;0.47nF,5%,50V,NP0,1608	1	SA
....4	C1061	2203-001656	C-CER,CHIP;0.47nF,5%,50V,NP0,1608	1	SA
....4	C3039	2203-001656	C-CER,CHIP;0.47nF,5%,50V,NP0,1608	1	SA
....4	C1117	2203-001724	C-CER,CHIP;4700nF,+80-20%,16V,Y5V,3216	1	SA
....4	C1003	2203-005005	C-CER,CHIP;100nF,10%,16V,X7R,1608	1	SA
....4	C1011	2203-005005	C-CER,CHIP;100nF,10%,16V,X7R,1608	1	SA
....4	C1032	2203-005005	C-CER,CHIP;100nF,10%,16V,X7R,1608	1	SA
....4	C1039	2203-005005	C-CER,CHIP;100nF,10%,16V,X7R,1608	1	SA
....4	C1066	2203-005005	C-CER,CHIP;100nF,10%,16V,X7R,1608	1	SA
....4	C1068	2203-005005	C-CER,CHIP;100nF,10%,16V,X7R,1608	1	SA
....4	C1071	2203-005005	C-CER,CHIP;100nF,10%,16V,X7R,1608	1	SA
....4	C1072	2203-005005	C-CER,CHIP;100nF,10%,16V,X7R,1608	1	SA
....4	C1073	2203-005005	C-CER,CHIP;100nF,10%,16V,X7R,1608	1	SA
....4	C1074	2203-005005	C-CER,CHIP;100nF,10%,16V,X7R,1608	1	SA
....4	C1078	2203-005005	C-CER,CHIP;100nF,10%,16V,X7R,1608	1	SA
....4	C1079	2203-005005	C-CER,CHIP;100nF,10%,16V,X7R,1608	1	SA
....4	C1093	2203-005005	C-CER,CHIP;100nF,10%,16V,X7R,1608	1	SA
....4	C1104	2203-005005	C-CER,CHIP;100nF,10%,16V,X7R,1608	1	SA
....4	C1108	2203-005005	C-CER,CHIP;100nF,10%,16V,X7R,1608	1	SA
....4	C1129	2203-005005	C-CER,CHIP;100nF,10%,16V,X7R,1608	1	SA
....4	C1130	2203-005005	C-CER,CHIP;100nF,10%,16V,X7R,1608	1	SA
....4	C1148	2203-005005	C-CER,CHIP;100nF,10%,16V,X7R,1608	1	SA
....4	C1169	2203-005005	C-CER,CHIP;100nF,10%,16V,X7R,1608	1	SA
....4	C3009	2203-005005	C-CER,CHIP;100nF,10%,16V,X7R,1608	1	SA
....4	C3010	2203-005005	C-CER,CHIP;100nF,10%,16V,X7R,1608	1	SA
....4	C3014	2203-005005	C-CER,CHIP;100nF,10%,16V,X7R,1608	1	SA
....4	C3015	2203-005005	C-CER,CHIP;100nF,10%,16V,X7R,1608	1	SA
....4	C3016	2203-005005	C-CER,CHIP;100nF,10%,16V,X7R,1608	1	SA
....4	C3018	2203-005005	C-CER,CHIP;100nF,10%,16V,X7R,1608	1	SA
....4	C3019	2203-005005	C-CER,CHIP;100nF,10%,16V,X7R,1608	1	SA
....4	C3022	2203-005005	C-CER,CHIP;100nF,10%,16V,X7R,1608	1	SA
....4	C3026	2203-005005	C-CER,CHIP;100nF,10%,16V,X7R,1608	1	SA
....4	C3027	2203-005005	C-CER,CHIP;100nF,10%,16V,X7R,1608	1	SA
....4	C3032	2203-005005	C-CER,CHIP;100nF,10%,16V,X7R,1608	1	SA
....4	C3037	2203-005005	C-CER,CHIP;100nF,10%,16V,X7R,1608	1	SA
....4	C3040	2203-005005	C-CER,CHIP;100nF,10%,16V,X7R,1608	1	SA
....4	C3042	2203-005005	C-CER,CHIP;100nF,10%,16V,X7R,1608	1	SA
....4	C3044	2203-005005	C-CER,CHIP;100nF,10%,16V,X7R,1608	1	SA
....4	C3046	2203-005005	C-CER,CHIP;100nF,10%,16V,X7R,1608	1	SA
....4	C3047	2203-005005	C-CER,CHIP;100nF,10%,16V,X7R,1608	1	SA
....4	C3049	2203-005005	C-CER,CHIP;100nF,10%,16V,X7R,1608	1	SA
....4	C4002	2203-005005	C-CER,CHIP;100nF,10%,16V,X7R,1608	1	SA
....4	C4125	2203-005005	C-CER,CHIP;100nF,10%,16V,X7R,1608	1	SA
....4	C4126	2203-005005	C-CER,CHIP;100nF,10%,16V,X7R,1608	1	SA
....4	C4129	2203-005005	C-CER,CHIP;100nF,10%,16V,X7R,1608	1	SA
....4	C5001	2203-005005	C-CER,CHIP;100nF,10%,16V,X7R,1608	1	SA
....4	C5002	2203-005005	C-CER,CHIP;100nF,10%,16V,X7R,1608	1	SA
....4	C5011	2203-005005	C-CER,CHIP;100nF,10%,16V,X7R,1608	1	SA
....4	C5012	2203-005005	C-CER,CHIP;100nF,10%,16V,X7R,1608	1	SA
....4	C5021	2203-005005	C-CER,CHIP;100nF,10%,16V,X7R,1608	1	SA
....4	C5023	2203-005005	C-CER,CHIP;100nF,10%,16V,X7R,1608	1	SA
....4	C5039	2203-005005	C-CER,CHIP;100nF,10%,16V,X7R,1608	1	SA
....4	C5054	2203-005005	C-CER,CHIP;100nF,10%,16V,X7R,1608	1	SA
....4	C1143	2203-005030	C-CER,CHIP;470nF,+80-20%,50V,Y5V,TP,3216	1	SA
....4	C1153	2203-005030	C-CER,CHIP;470nF,+80-20%,50V,Y5V,TP,3216	1	SA
....4	C1031	2203-005065	C-CER,CHIP;1000nF,+80-20%,10V,Y5V,1608	1	SA

ELECTRONIC SERVICE TIRGOVISTE

Level	Loc. No.	Code No.	Description & Specification	Q'ty	SA/SNA
....4	C1040	2203-005065	C-CER,CHIP;1000nF,+80-20%,10V,Y5V,1608	1	SA
....4	C1155	2203-005065	C-CER,CHIP;1000nF,+80-20%,10V,Y5V,1608	1	SA
....4	C2038	2203-005065	C-CER,CHIP;1000nF,+80-20%,10V,Y5V,1608	1	SA
....4	C3023	2203-005065	C-CER,CHIP;1000nF,+80-20%,10V,Y5V,1608	1	SA
....4	C3033	2203-005065	C-CER,CHIP;1000nF,+80-20%,10V,Y5V,1608	1	SA
....4	C4117	2203-005065	C-CER,CHIP;1000nF,+80-20%,10V,Y5V,1608	1	SA
....4	C4118	2203-005065	C-CER,CHIP;1000nF,+80-20%,10V,Y5V,1608	1	SA
....4	C1122	2203-005249	C-CER,CHIP;100nF,10%,50V,X7R,1608	1	SA
....4	C1131	2203-005249	C-CER,CHIP;100nF,10%,50V,X7R,1608	1	SA
....4	C1137	2203-005249	C-CER,CHIP;100nF,10%,50V,X7R,1608	1	SA
....4	C1138	2203-005249	C-CER,CHIP;100nF,10%,50V,X7R,1608	1	SA
....4	C1140	2203-005249	C-CER,CHIP;100nF,10%,50V,X7R,1608	1	SA
....4	C1144	2203-005249	C-CER,CHIP;100nF,10%,50V,X7R,1608	1	SA
....4	C1145	2203-005249	C-CER,CHIP;100nF,10%,50V,X7R,1608	1	SA
....4	C1146	2203-005249	C-CER,CHIP;100nF,10%,50V,X7R,1608	1	SA
....4	C1147	2203-005249	C-CER,CHIP;100nF,10%,50V,X7R,1608	1	SA
....4	C1149	2203-005249	C-CER,CHIP;100nF,10%,50V,X7R,1608	1	SA
....4	C1150	2203-005249	C-CER,CHIP;100nF,10%,50V,X7R,1608	1	SA
....4	C1154	2203-005249	C-CER,CHIP;100nF,10%,50V,X7R,1608	1	SA
....4	C1156	2203-005249	C-CER,CHIP;100nF,10%,50V,X7R,1608	1	SA
....4	C1157	2203-005249	C-CER,CHIP;100nF,10%,50V,X7R,1608	1	SA
....4	C1160	2203-005249	C-CER,CHIP;100nF,10%,50V,X7R,1608	1	SA
....4	C1166	2203-005249	C-CER,CHIP;100nF,10%,50V,X7R,1608	1	SA
....4	C4014	2203-005533	C-CER,CHIP;1000nF,20%,6.3V,X7R,TP,1608	1	SA
....4	C4015	2203-005533	C-CER,CHIP;1000nF,20%,6.3V,X7R,TP,1608	1	SA
....4	C4024	2203-005533	C-CER,CHIP;1000nF,20%,6.3V,X7R,TP,1608	1	SA
....4	C4033	2203-005533	C-CER,CHIP;1000nF,20%,6.3V,X7R,TP,1608	1	SA
....4	C4037	2203-005533	C-CER,CHIP;1000nF,20%,6.3V,X7R,TP,1608	1	SA
....4	C4044	2203-005533	C-CER,CHIP;1000nF,20%,6.3V,X7R,TP,1608	1	SA
....4	C4050	2203-005533	C-CER,CHIP;1000nF,20%,6.3V,X7R,TP,1608	1	SA
....4	C4065	2203-005533	C-CER,CHIP;1000nF,20%,6.3V,X7R,TP,1608	1	SA
....4	C4074	2203-005533	C-CER,CHIP;1000nF,20%,6.3V,X7R,TP,1608	1	SA
....4	C4075	2203-005533	C-CER,CHIP;1000nF,20%,6.3V,X7R,TP,1608	1	SA
....4	C4078	2203-005533	C-CER,CHIP;1000nF,20%,6.3V,X7R,TP,1608	1	SA
....4	C4079	2203-005533	C-CER,CHIP;1000nF,20%,6.3V,X7R,TP,1608	1	SA
....4	C4087	2203-005533	C-CER,CHIP;1000nF,20%,6.3V,X7R,TP,1608	1	SA
....4	C4088	2203-005533	C-CER,CHIP;1000nF,20%,6.3V,X7R,TP,1608	1	SA
....4	C4089	2203-005533	C-CER,CHIP;1000nF,20%,6.3V,X7R,TP,1608	1	SA
....4	C4090	2203-005533	C-CER,CHIP;1000nF,20%,6.3V,X7R,TP,1608	1	SA
....4	C4091	2203-005533	C-CER,CHIP;1000nF,20%,6.3V,X7R,TP,1608	1	SA
....4	C4092	2203-005533	C-CER,CHIP;1000nF,20%,6.3V,X7R,TP,1608	1	SA
....4	C4093	2203-005533	C-CER,CHIP;1000nF,20%,6.3V,X7R,TP,1608	1	SA
....4	C4094	2203-005533	C-CER,CHIP;1000nF,20%,6.3V,X7R,TP,1608	1	SA
....4	C1001	2203-006333	C-CER,CHIP;10000nF,20%,16V,X5R,TP,3216	1	SA
....4	C1012	2203-006333	C-CER,CHIP;10000nF,20%,16V,X5R,TP,3216	1	SA
....4	C1014	2203-006333	C-CER,CHIP;10000nF,20%,16V,X5R,TP,3216	1	SA
....4	C1017	2203-006333	C-CER,CHIP;10000nF,20%,16V,X5R,TP,3216	1	SA
....4	C1018	2203-006333	C-CER,CHIP;10000nF,20%,16V,X5R,TP,3216	1	SA
....4	C1019	2203-006333	C-CER,CHIP;10000nF,20%,16V,X5R,TP,3216	1	SA
....4	C1020	2203-006333	C-CER,CHIP;10000nF,20%,16V,X5R,TP,3216	1	SA
....4	C1023	2203-006333	C-CER,CHIP;10000nF,20%,16V,X5R,TP,3216	1	SA
....4	C1024	2203-006333	C-CER,CHIP;10000nF,20%,16V,X5R,TP,3216	1	SA
....4	C1030	2203-006333	C-CER,CHIP;10000nF,20%,16V,X5R,TP,3216	1	SA
....4	C1033	2203-006333	C-CER,CHIP;10000nF,20%,16V,X5R,TP,3216	1	SA
....4	C1035	2203-006333	C-CER,CHIP;10000nF,20%,16V,X5R,TP,3216	1	SA
....4	C1041	2203-006333	C-CER,CHIP;10000nF,20%,16V,X5R,TP,3216	1	SA
....4	C1044	2203-006333	C-CER,CHIP;10000nF,20%,16V,X5R,TP,3216	1	SA
....4	C1045	2203-006333	C-CER,CHIP;10000nF,20%,16V,X5R,TP,3216	1	SA
....4	C1047	2203-006333	C-CER,CHIP;10000nF,20%,16V,X5R,TP,3216	1	SA
....4	C1048	2203-006333	C-CER,CHIP;10000nF,20%,16V,X5R,TP,3216	1	SA

ELECTRONIC SERVICE TIRGOVISTE

Level	Loc. No.	Code No.	Description & Specification	Q'ty	SA/SNA
....4	C1051	2203-006333	C-CER,CHIP;10000nF,20%,16V,X5R,TP,3216	1	SA
....4	C1058	2203-006333	C-CER,CHIP;10000nF,20%,16V,X5R,TP,3216	1	SA
....4	C1060	2203-006333	C-CER,CHIP;10000nF,20%,16V,X5R,TP,3216	1	SA
....4	C1065	2203-006333	C-CER,CHIP;10000nF,20%,16V,X5R,TP,3216	1	SA
....4	C1076	2203-006333	C-CER,CHIP;10000nF,20%,16V,X5R,TP,3216	1	SA
....4	C1080	2203-006333	C-CER,CHIP;10000nF,20%,16V,X5R,TP,3216	1	SA
....4	C1081	2203-006333	C-CER,CHIP;10000nF,20%,16V,X5R,TP,3216	1	SA
....4	C1083	2203-006333	C-CER,CHIP;10000nF,20%,16V,X5R,TP,3216	1	SA
....4	C1085	2203-006333	C-CER,CHIP;10000nF,20%,16V,X5R,TP,3216	1	SA
....4	C1088	2203-006333	C-CER,CHIP;10000nF,20%,16V,X5R,TP,3216	1	SA
....4	C1089	2203-006333	C-CER,CHIP;10000nF,20%,16V,X5R,TP,3216	1	SA
....4	C1090	2203-006333	C-CER,CHIP;10000nF,20%,16V,X5R,TP,3216	1	SA
....4	C1091	2203-006333	C-CER,CHIP;10000nF,20%,16V,X5R,TP,3216	1	SA
....4	C1092	2203-006333	C-CER,CHIP;10000nF,20%,16V,X5R,TP,3216	1	SA
....4	C1096	2203-006333	C-CER,CHIP;10000nF,20%,16V,X5R,TP,3216	1	SA
....4	C1099	2203-006333	C-CER,CHIP;10000nF,20%,16V,X5R,TP,3216	1	SA
....4	C1126	2203-006333	C-CER,CHIP;10000nF,20%,16V,X5R,TP,3216	1	SA
....4	C1136	2203-006333	C-CER,CHIP;10000nF,20%,16V,X5R,TP,3216	1	SA
....4	C3017	2203-006333	C-CER,CHIP;10000nF,20%,16V,X5R,TP,3216	1	SA
....4	C4057	2203-006333	C-CER,CHIP;10000nF,20%,16V,X5R,TP,3216	1	SA
....4	C4064	2203-006333	C-CER,CHIP;10000nF,20%,16V,X5R,TP,3216	1	SA
....4	C4072	2203-006333	C-CER,CHIP;10000nF,20%,16V,X5R,TP,3216	1	SA
....4	C4082	2203-006333	C-CER,CHIP;10000nF,20%,16V,X5R,TP,3216	1	SA
....4	C4122	2203-006333	C-CER,CHIP;10000nF,20%,16V,X5R,TP,3216	1	SA
....4	C5083	2203-006333	C-CER,CHIP;10000nF,20%,16V,X5R,TP,3216	1	SA
....4	C5086	2203-006333	C-CER,CHIP;10000nF,20%,16V,X5R,TP,3216	1	SA
....4	C2001	2402-000108	C-AL,SMD;10uF,20%,16V,WT,TP,4.3x4.3x5.2m	1	SA
....4	C5037	2402-000108	C-AL,SMD;10uF,20%,16V,WT,TP,4.3x4.3x5.2m	1	SA
....4	C5041	2402-000108	C-AL,SMD;10uF,20%,16V,WT,TP,4.3x4.3x5.2m	1	SA
....4	C1102	2402-001081	C-AL,SMD;100uF,20%,25V,WT,TP,8.3x8.3x10	1	SA
....4	C1125	2402-001083	C-AL,SMD;100uF,20%,50V,GP,TP,10x10.3x10m	1	SA
....4	C5032	2402-001097	C-AL,SMD;0.1UF,20%,50V,WT,TP,4.3X4.3X5.2	1	SA
....4	C5033	2402-001097	C-AL,SMD;0.1UF,20%,50V,WT,TP,4.3X4.3X5.2	1	SA
....4	C1009	2402-001128	C-AL,SMD;100UF,20%,16V,WT,TP,6.3X5.7MM	1	SA
....4	C1010	2402-001128	C-AL,SMD;100UF,20%,16V,WT,TP,6.3X5.7MM	1	SA
....4	C1015	2402-001128	C-AL,SMD;100UF,20%,16V,WT,TP,6.3X5.7MM	1	SA
....4	C1029	2402-001128	C-AL,SMD;100UF,20%,16V,WT,TP,6.3X5.7MM	1	SA
....4	C1036	2402-001128	C-AL,SMD;100UF,20%,16V,WT,TP,6.3X5.7MM	1	SA
....4	C1042	2402-001128	C-AL,SMD;100UF,20%,16V,WT,TP,6.3X5.7MM	1	SA
....4	C1059	2402-001128	C-AL,SMD;100UF,20%,16V,WT,TP,6.3X5.7MM	1	SA
....4	C1112	2402-001128	C-AL,SMD;100UF,20%,16V,WT,TP,6.3X5.7MM	1	SA
....4	C1113	2402-001128	C-AL,SMD;100UF,20%,16V,WT,TP,6.3X5.7MM	1	SA
....4	C1115	2402-001128	C-AL,SMD;100UF,20%,16V,WT,TP,6.3X5.7MM	1	SA
....4	C1123	2402-001128	C-AL,SMD;100UF,20%,16V,WT,TP,6.3X5.7MM	1	SA
....4	C1007	2402-001129	C-AL,SMD;47UF,20%,16V,WT,TP,6.3X5.2MM	1	SA
....4	C1028	2402-001129	C-AL,SMD;47UF,20%,16V,WT,TP,6.3X5.2MM	1	SA
....4	C1064	2402-001129	C-AL,SMD;47UF,20%,16V,WT,TP,6.3X5.2MM	1	SA
....4	C1069	2402-001129	C-AL,SMD;47UF,20%,16V,WT,TP,6.3X5.2MM	1	SA
....4	C1107	2402-001129	C-AL,SMD;47UF,20%,16V,WT,TP,6.3X5.2MM	1	SA
....4	C3036	2402-001129	C-AL,SMD;47UF,20%,16V,WT,TP,6.3X5.2MM	1	SA
....4	C3038	2402-001129	C-AL,SMD;47UF,20%,16V,WT,TP,6.3X5.2MM	1	SA
....4	C4010	2402-001129	C-AL,SMD;47UF,20%,16V,WT,TP,6.3X5.2MM	1	SA
....4	C5042	2402-001129	C-AL,SMD;47UF,20%,16V,WT,TP,6.3X5.2MM	1	SA
....4	C1106	2402-001160	C-AL,SMD;330UF,20%,16V,WT,TP,1008	1	SA
....4	C1077	2402-001178	C-AL,SMD;10uF,20%,16V,WT,TP,4.3x4.3x5.8m	1	SA
....4	C1139	2402-001178	C-AL,SMD;10uF,20%,16V,WT,TP,4.3x4.3x5.8m	1	SA
....4	C2017	2402-001178	C-AL,SMD;10uF,20%,16V,WT,TP,4.3x4.3x5.8m	1	SA
....4	C3004	2402-001178	C-AL,SMD;10uF,20%,16V,WT,TP,4.3x4.3x5.8m	1	SA
....4	C3006	2402-001178	C-AL,SMD;10uF,20%,16V,WT,TP,4.3x4.3x5.8m	1	SA
....4	C3008	2402-001178	C-AL,SMD;10uF,20%,16V,WT,TP,4.3x4.3x5.8m	1	SA

ELECTRONIC SERVICE TIRGOVISTE

Level	Loc. No.	Code No.	Description & Specification	Q'ty	SA/SNA
....4	C3011	2402-001178	C-AL,SMD;10uF,20%,16V,WT,TP,4.3x4.3x5.8m	1	SA
....4	C3028	2402-001178	C-AL,SMD;10uF,20%,16V,WT,TP,4.3x4.3x5.8m	1	SA
....4	C3041	2402-001178	C-AL,SMD;10uF,20%,16V,WT,TP,4.3x4.3x5.8m	1	SA
....4	C3043	2402-001178	C-AL,SMD;10uF,20%,16V,WT,TP,4.3x4.3x5.8m	1	SA
....4	C3045	2402-001178	C-AL,SMD;10uF,20%,16V,WT,TP,4.3x4.3x5.8m	1	SA
....4	C3048	2402-001178	C-AL,SMD;10uF,20%,16V,WT,TP,4.3x4.3x5.8m	1	SA
....4	C3050	2402-001178	C-AL,SMD;10uF,20%,16V,WT,TP,4.3x4.3x5.8m	1	SA
....4	C3051	2402-001178	C-AL,SMD;10uF,20%,16V,WT,TP,4.3x4.3x5.8m	1	SA
....4	C1057	2402-001183	C-AL,SMD;22UF,20%,16V,WT,TP,5.3X5.3X6MM	1	SA
....4	C1128	2402-001183	C-AL,SMD;22UF,20%,16V,WT,TP,5.3X5.3X6MM	1	SA
....4	C1167	2402-001183	C-AL,SMD;22UF,20%,16V,WT,TP,5.3X5.3X6MM	1	SA
....4	C4123	2402-001183	C-AL,SMD;22UF,20%,16V,WT,TP,5.3X5.3X6MM	1	SA
....4	C5005	2402-001183	C-AL,SMD;22UF,20%,16V,WT,TP,5.3X5.3X6MM	1	SA
....4	C5016	2402-001183	C-AL,SMD;22UF,20%,16V,WT,TP,5.3X5.3X6MM	1	SA
....4	C1127	2402-001221	C-AL,SMD;470UF,20%,16V,-,TP,A8.3XB8.3XL1	1	SA
....4	C1165	2402-001221	C-AL,SMD;470UF,20%,16V,-,TP,A8.3XB8.3XL1	1	SA
....4	C4030	2402-001226	C-AL,SMD;4.7UF,20%,35V,HR,TP,4.3X4.3X5.8	1	SA
....4	C4047	2402-001226	C-AL,SMD;4.7UF,20%,35V,HR,TP,4.3X4.3X5.8	1	SA
....4	C4051	2402-001226	C-AL,SMD;4.7UF,20%,35V,HR,TP,4.3X4.3X5.8	1	SA
....4	C4127	2402-001226	C-AL,SMD;4.7UF,20%,35V,HR,TP,4.3X4.3X5.8	1	SA
....4	C5078	2402-001257	C-AL,SMD;470uF,20%,16V,-,TP,8.3*10	1	SA
....4	C5079	2402-001257	C-AL,SMD;470uF,20%,16V,-,TP,8.3*10	1	SA
....4	C5080	2402-001257	C-AL,SMD;470uF,20%,16V,-,TP,8.3*10	1	SA
....4	C1095	2409-001029	C-ORGANIC;120uF,20%,6.3V,WT,TP,10.3x10.3	1	SA
....4	T0052	2703-000274	INDUCTOR-SMD;2.2uH,10%,2012	1	SA
....4	T0052	2703-000398	INDUCTOR-SMD;10uH,10%,3225	1	SA
....4	T0052	2703-000398	INDUCTOR-SMD;10uH,10%,3225	1	SA
....4	T0052	2703-000398	INDUCTOR-SMD;10uH,10%,3225	1	SA
....4	T0052	2703-000398	INDUCTOR-SMD;10uH,10%,3225	1	SA
....4	T0052	2703-000398	INDUCTOR-SMD;10uH,10%,3225	1	SA
....4	T0052	2703-000398	INDUCTOR-SMD;10uH,10%,3225	1	SA
....4	T0052	2703-000398	INDUCTOR-SMD;10uH,10%,3225	1	SA
....4	T0052	2703-000398	INDUCTOR-SMD;10uH,10%,3225	1	SA
....4	T0052	2703-000398	INDUCTOR-SMD;10uH,10%,3225	1	SA
....4	T0052	2703-000398	INDUCTOR-SMD;10uH,10%,3225	1	SA
....4	T0052	2703-000398	INDUCTOR-SMD;10uH,10%,3225	1	SA
....4	T0052	2703-000398	INDUCTOR-SMD;10uH,10%,3225	1	SA
....4	T0052	2703-000398	INDUCTOR-SMD;10uH,10%,3225	1	SA
....4	T0052	2703-000398	INDUCTOR-SMD;10uH,10%,3225	1	SA
....4	T0052	2703-000398	INDUCTOR-SMD;10uH,10%,3225	1	SA
....4	T0052	2703-000398	INDUCTOR-SMD;10uH,10%,3225	1	SA
....4	T0052	2703-000398	INDUCTOR-SMD;10uH,10%,3225	1	SA
....4	T0052	2703-001229	INDUCTOR-SMD;2.2uH,10%,1608	1	SA
....4	T0052	2703-001229	INDUCTOR-SMD;2.2uH,10%,1608	1	SA
....4	T0052	2703-001229	INDUCTOR-SMD;2.2uH,10%,1608	1	SA
....4	T0052	2703-001229	INDUCTOR-SMD;2.2uH,10%,1608	1	SA
....4	T0052	2703-001229	INDUCTOR-SMD;2.2uH,10%,1608	1	SA
....4	T0052	2703-001229	INDUCTOR-SMD;2.2uH,10%,1608	1	SA
....4	T0052	2703-001778	INDUCTOR-SMD;3.3uH,20%,3225	1	SA
....4	T0052	2703-002722	INDUCTOR-SMD;22uH,20%,12x12mm	1	SA
....4	X3002	2801-003326	CRYSTAL-SMD;24MHZ,30PPM,28-ABX,20PF,50OH	1	SA
....4	X3001	2801-003923	CRYSTAL-SMD;10MHz,30ppm,28-AAN,20pF,60oh	1	SA
....4	X1001	2801-003954	CRYSTAL-SMD;27MHz,30ppm,28-AAN,16pF,50oh	1	SA
....4	X4001	2801-004483	CRYSTAL-SMD;28.322MHz,30ppm,HC-49,20pF,5	1	SA
....4	F103	2901-001114	FILTER-EMI SMD;25VDC,2.0ADC,-,100nF,3.2x	1	SA
....4	T0568	3301-000314	BEAD-SMD;120ohm,1.6x0.8x0.8mm,-,-,-	1	SNA
....4	T0568	3301-000314	BEAD-SMD;120ohm,1.6x0.8x0.8mm,-,-,-	1	SNA
....4	T0568	3301-001145	BEAD-SMD;60ohm,4516,TP,70ohm/45MHz,82ohm	1	SNA
....4	T0568	3301-001145	BEAD-SMD;60ohm,4516,TP,70ohm/45MHz,82ohm	1	SNA
....4	T0568	3301-001145	BEAD-SMD;60ohm,4516,TP,70ohm/45MHz,82ohm	1	SNA
....4	T0568	3301-001145	BEAD-SMD;60ohm,4516,TP,70ohm/45MHz,82ohm	1	SNA

ELECTRONIC SERVICE TIRGOVISTE

Level	Loc. No.	Code No.	Description & Specification	Q'ty	SA/SNA
....4	T0568	3301-001236	BEAD-SMD;60ohm,1608,-,-,-	1	SNA
....4	T0568	3301-001236	BEAD-SMD;60ohm,1608,-,-,-	1	SNA
....4	T0568	3301-001236	BEAD-SMD;60ohm,1608,-,-,-	1	SNA
....4	T0568	3301-001236	BEAD-SMD;60ohm,1608,-,-,-	1	SNA
....4	T0568	3301-001236	BEAD-SMD;60ohm,1608,-,-,-	1	SNA
....4	T0568	3301-001236	BEAD-SMD;60ohm,1608,-,-,-	1	SNA
....4	T0568	3301-001324	BEAD-SMD;15ohm,2012,600mA,TP,,,0.1ohm	1	SNA
....4	T0568	3301-001324	BEAD-SMD;15ohm,2012,600mA,TP,,,0.1ohm	1	SNA
....4	T0568	3301-001324	BEAD-SMD;15ohm,2012,600mA,TP,,,0.1ohm	1	SNA
....4	T0568	3301-001324	BEAD-SMD;15ohm,2012,600mA,TP,,,0.1ohm	1	SNA
....4	T0568	3301-001324	BEAD-SMD;15ohm,2012,600mA,TP,,,0.1ohm	1	SNA
....4	T0568	3301-001324	BEAD-SMD;15ohm,2012,600mA,TP,,,0.1ohm	1	SNA
....4	T0568	3301-001324	BEAD-SMD;15ohm,2012,600mA,TP,,,0.1ohm	1	SNA
....4	T0568	3301-001324	BEAD-SMD;15ohm,2012,600mA,TP,,,0.1ohm	1	SNA
....4	T0568	3301-001324	BEAD-SMD;15ohm,2012,600mA,TP,,,0.1ohm	1	SNA
....4	T0568	3301-001324	BEAD-SMD;15ohm,2012,600mA,TP,,,0.1ohm	1	SNA
....4	T0568	3301-001324	BEAD-SMD;15ohm,2012,600mA,TP,,,0.1ohm	1	SNA
....4	T0568	3301-001324	BEAD-SMD;15ohm,2012,600mA,TP,,,0.1ohm	1	SNA
....4	T0568	3301-001404	BEAD-SMD;30ohm,2012,TP,-,-	1	SA
....4	T0568	3301-001404	BEAD-SMD;30ohm,2012,TP,-,-	1	SA
....4	T0568	3301-001404	BEAD-SMD;30ohm,2012,TP,-,-	1	SA
....4	T0568	3301-001404	BEAD-SMD;30ohm,2012,TP,-,-	1	SA
....4	T0568	3301-001404	BEAD-SMD;30ohm,2012,TP,-,-	1	SA
....4	T0568	3301-001404	BEAD-SMD;30ohm,2012,TP,-,-	1	SA
....4	T0568	3301-001569	BEAD-SMD;600ohm,2012,1000mA,TP,520ohm/90	1	SNA
....4	T0568	3301-001569	BEAD-SMD;600ohm,2012,1000mA,TP,520ohm/90	1	SNA
....4	T0568	3301-001569	BEAD-SMD;600ohm,2012,1000mA,TP,520ohm/90	1	SNA
....4	CN2001	3701-001311	CONNECTOR-HDMI;21P,2R,FEMALE,SMD-S,AU30U	1	SA
....4	CN1003	3711-005291	HEADER-BOARD TO CABLE;BOX,2P,1R,2MM,SMD-	1	SA
....4	CN1002	3711-005292	HEADER-BOARD TO CABLE;BOX,3P,1R,2MM,SMD-	1	SA
....4	CN5001	3711-005497	HEADER-BOARD TO CABLE;BOX,15P,1R,1.25MM,	1	SA
....4	M0018	BN97-00805F	ASSY MICOM;T-XXXX-XXXX,LE32R73BDX/XEU49B	1	SA
.....5	IC115	1107-001555	IC-FLASH MEMORY;49BV802A,8MBIT,1MX8/512K	1	SNA
....4	M0018	BN97-00805G	ASSY MICOM;T-XXXX-XXXX,LE32R73BDX/XEU24C	1	SA
.....5	IC520	0903-001389	IC-MICROCONTROLLER;S3F866B,8Bit,QFP,44P,	1	SNA
....4	R1057	2007-007299	R-CHIP;6.81Kohm,1%,1/10W,TP,1608	1	SA
....4	R2024	2007-000040	R-CHIP;150ohm,1%,1/10W,TP,1608	1	SA
....4	R2119	2007-000287	R-CHIP;100OHM,1%,1/10W,TP,1608	1	SA
....4	R2030	2007-001131	R-CHIP;68ohm,1%,1/10W,TP,1608	1	SA
....4	R2056	2007-001131	R-CHIP;68ohm,1%,1/10W,TP,1608	1	SA
....4	R2118	2007-007733	R-CHIP;51ohm,1%,1/10W,TP,1608	1	SA
....4	T0052	2703-002915	INDUCTOR-SMD;22uH,20%,8080	1	SA
....4	T0052	2703-002915	INDUCTOR-SMD;22uH,20%,8080	1	SA
....4	T0052	2703-002915	INDUCTOR-SMD;22uH,20%,8080	1	SA
....4	T0052	2703-002915	INDUCTOR-SMD;22uH,20%,8080	1	SA
....4	R4121	2007-000075	R-CHIP;220ohm,5%,1/10W,TP,1608	1	SA
....4	R4122	2007-000903	R-CHIP;430ohm,1%,1/10W,TP,1608	1	SA
....4	C5024	2402-000179	C-AL,SMD;47uF,20%,16V,GP,TP,6.6x6.6x5.7m	1	SA
....4	C4012	2402-001059	C-AL,SMD;220UF,20%,6.3V,-,TP,6X6.6X6.6	1	SA
....4	C4013	2402-001059	C-AL,SMD;220UF,20%,6.3V,-,TP,6X6.6X6.6	1	SA
....4	T0568	3301-001393	BEAD-SMD;60ohm,3216,1500mA,TP,41ohm/40MH	1	SNA
....4	T0077	BN41-00700A	PCB MAIN;CAMBRIDGE,FR-4,4,MP1.0,1.6T,192	1	SNA
...3	T0562	6046-001013	STAND OFF;M3,L5,Ni PLT,SUM24L,#4-40	2	SNA
..2	T0422	BN94-00887B	ASSY PCB MISC-DTV MODULE;LE26R73BD/LE26R	1	SNA
...3	T0245	0202-001522	SOLDER-WIRE FLUX;LFA3-107,-,D1.2,96.5Sn/	0.003	SNA
...3	CN902	3703-001124	CONNECTOR-BACK PANEL;32P,2R,MALE,ANGLE,A	1	SA
...3	CN902	3703-001124	CONNECTOR-BACK PANEL;32P,2R,MALE,ANGLE,A	1	SA
...3	DJ301	3709-001346	CONNECTOR-CARD SLOT;68P,0.27mm,ANGLE,AU1	1	SA
...3	DJ402	3722-001055	JACK-PHONE;5P/2C,AG,BLK,ANGLE	1	SA

ELECTRONIC SERVICE TIRGOVISTE

Level	Loc. No.	Code No.	Description & Specification	Q'ty	SA/SNA
...3	T0510	BN97-00843A	ASSY SMD-MAIN;DTV MODULE,XEF	1	SNA
....4	CIS05	0202-001477	SOLDER-CREAM;LST309-M,-,D20~45§-,96.5Sn/	0.465	SNA
....4	DQ701	0501-000434	TR-SMALL SIGNAL;KTC3875S-GR,NPN,150mW,SO	1	SA
....4	DQ401	0501-000669	TR-SMALL SIGNAL;KTA1505Y,PNP,150mW,SOT-2	1	SA
....4	DQ402	0501-000669	TR-SMALL SIGNAL;KTA1505Y,PNP,150mW,SOT-2	1	SA
....4	DQ703	0501-000669	TR-SMALL SIGNAL;KTA1505Y,PNP,150mW,SOT-2	1	SA
....4	DQ704	0501-000669	TR-SMALL SIGNAL;KTA1505Y,PNP,150mW,SOT-2	1	SA
....4	IC104	0801-002095	IC-CMOS LOGIC;74LCX245,TRANSCEIVER,TSSOP	1	SA
....4	IC104	0801-002237	IC-CMOS LOGIC;74V(A)HC1G04,INVERTER,SC70	1	SA
....4	IC104	0801-002394	IC-CMOS LOGIC;74LCX32,OR GATE,SOIC,14P,1	1	SA
....4	IC104	0801-002407	IC-CMOS LOGIC;74LCX08,AND GATE,SOIC,14P,	1	SA
....4	IC104	0801-002683	IC-CMOS LOGIC;74HCT245,TRANSCEIVER,TSSOP	1	SA
....4	IC104	0801-002709	IC-CMOS LOGIC;74HC373,D FLIP-FLOP,TSSOP,	1	SA
....4	IC104	0801-002709	IC-CMOS LOGIC;74HC373,D FLIP-FLOP,TSSOP,	1	SA
....4	IC107	1002-001227	IC-D/A CONVERTER;CS4340-KSR,24BIT,SOP,16	1	SA
....4	DU402	1006-001165	IC-LINE TRANSCEIVER;MAX3243CDBR,SSOP,28P	1	SA
....4	IC113	1105-001305	IC-DRAM;4S641632,-,64MBIT,1MX16X4BIT,TSO	1	SA
....4	IC113	1105-001308	IC-DRAM;K4S281632,128Mbit,8Mx16,TSOP,54P	1	SA
....4	DU701	1203-001824	IC-VOL. DETECTOR;7042,SOT-89,3P,-,PLASTI	1	SA
....4	T0087	1203-002842	IC-POSI.FIXED REG.;AP1117D-33A,TO-252,3P	1	SA
....4	DU101	1204-002400	IC-DECODER;STI5517SUA,PBGA,416P,27x27mm,	1	SA
....4	DR155	2007-000052	R-CHIP;10Kohm,1%,1/10W,TP,1608	1	SA
....4	DR156	2007-000052	R-CHIP;10Kohm,1%,1/10W,TP,1608	1	SA
....4	DR140	2007-000070	R-CHIP;0ohm,5%,1/10W,TP,1608	1	SA
....4	DR154	2007-000070	R-CHIP;0ohm,5%,1/10W,TP,1608	1	SA
....4	DR158	2007-000070	R-CHIP;0ohm,5%,1/10W,TP,1608	1	SA
....4	DR159	2007-000070	R-CHIP;0ohm,5%,1/10W,TP,1608	1	SA
....4	DR811	2007-000070	R-CHIP;0ohm,5%,1/10W,TP,1608	1	SA
....4	DR812	2007-000070	R-CHIP;0ohm,5%,1/10W,TP,1608	1	SA
....4	DR907	2007-000070	R-CHIP;0ohm,5%,1/10W,TP,1608	1	SA
....4	OR112	2007-000070	R-CHIP;0ohm,5%,1/10W,TP,1608	1	SA
....4	OR113	2007-000070	R-CHIP;0ohm,5%,1/10W,TP,1608	1	SA
....4	DR1102	2007-000072	R-CHIP;47ohm,5%,1/10W,TP,1608	1	SA
....4	DR111	2007-000072	R-CHIP;47ohm,5%,1/10W,TP,1608	1	SA
....4	DR116	2007-000072	R-CHIP;47ohm,5%,1/10W,TP,1608	1	SA
....4	DR169	2007-000072	R-CHIP;47ohm,5%,1/10W,TP,1608	1	SA
....4	DR170	2007-000072	R-CHIP;47ohm,5%,1/10W,TP,1608	1	SA
....4	DR174	2007-000072	R-CHIP;47ohm,5%,1/10W,TP,1608	1	SA
....4	DR176	2007-000072	R-CHIP;47ohm,5%,1/10W,TP,1608	1	SA
....4	DR182	2007-000072	R-CHIP;47ohm,5%,1/10W,TP,1608	1	SA
....4	DR183	2007-000072	R-CHIP;47ohm,5%,1/10W,TP,1608	1	SA
....4	DR184	2007-000072	R-CHIP;47ohm,5%,1/10W,TP,1608	1	SA
....4	DR185	2007-000072	R-CHIP;47ohm,5%,1/10W,TP,1608	1	SA
....4	DR186	2007-000072	R-CHIP;47ohm,5%,1/10W,TP,1608	1	SA
....4	DR187	2007-000072	R-CHIP;47ohm,5%,1/10W,TP,1608	1	SA
....4	DR195	2007-000072	R-CHIP;47ohm,5%,1/10W,TP,1608	1	SA
....4	DR196	2007-000072	R-CHIP;47ohm,5%,1/10W,TP,1608	1	SA
....4	DR197	2007-000072	R-CHIP;47ohm,5%,1/10W,TP,1608	1	SA
....4	DR198	2007-000072	R-CHIP;47ohm,5%,1/10W,TP,1608	1	SA
....4	DR199	2007-000072	R-CHIP;47ohm,5%,1/10W,TP,1608	1	SA
....4	DR202	2007-000072	R-CHIP;47ohm,5%,1/10W,TP,1608	1	SA
....4	DR203	2007-000072	R-CHIP;47ohm,5%,1/10W,TP,1608	1	SA
....4	DR204	2007-000072	R-CHIP;47ohm,5%,1/10W,TP,1608	1	SA
....4	DR501	2007-000072	R-CHIP;47ohm,5%,1/10W,TP,1608	1	SA
....4	DR902	2007-000072	R-CHIP;47ohm,5%,1/10W,TP,1608	1	SA
....4	DR905	2007-000072	R-CHIP;47ohm,5%,1/10W,TP,1608	1	SA
....4	DR906	2007-000072	R-CHIP;47ohm,5%,1/10W,TP,1608	1	SA
....4	DR916	2007-000072	R-CHIP;47ohm,5%,1/10W,TP,1608	1	SA
....4	DR917	2007-000072	R-CHIP;47ohm,5%,1/10W,TP,1608	1	SA
....4	DR923	2007-000072	R-CHIP;47ohm,5%,1/10W,TP,1608	1	SA

ELECTRONIC SERVICE TIRGOVISTE

Level	Loc. No.	Code No.	Description & Specification	Q'ty	SA/SNA
....4	DR104	2007-000074	R-CHIP;100ohm,5%,1/10W,TP,1608	1	SA
....4	DR105	2007-000074	R-CHIP;100ohm,5%,1/10W,TP,1608	1	SA
....4	DR1101	2007-000074	R-CHIP;100ohm,5%,1/10W,TP,1608	1	SA
....4	DR112	2007-000074	R-CHIP;100ohm,5%,1/10W,TP,1608	1	SA
....4	DR113	2007-000074	R-CHIP;100ohm,5%,1/10W,TP,1608	1	SA
....4	DR118	2007-000074	R-CHIP;100ohm,5%,1/10W,TP,1608	1	SA
....4	DR119	2007-000074	R-CHIP;100ohm,5%,1/10W,TP,1608	1	SA
....4	DR120	2007-000074	R-CHIP;100ohm,5%,1/10W,TP,1608	1	SA
....4	DR121	2007-000074	R-CHIP;100ohm,5%,1/10W,TP,1608	1	SA
....4	DR122	2007-000074	R-CHIP;100ohm,5%,1/10W,TP,1608	1	SA
....4	DR123	2007-000074	R-CHIP;100ohm,5%,1/10W,TP,1608	1	SA
....4	DR124	2007-000074	R-CHIP;100ohm,5%,1/10W,TP,1608	1	SA
....4	DR125	2007-000074	R-CHIP;100ohm,5%,1/10W,TP,1608	1	SA
....4	DR126	2007-000074	R-CHIP;100ohm,5%,1/10W,TP,1608	1	SA
....4	DR127	2007-000074	R-CHIP;100ohm,5%,1/10W,TP,1608	1	SA
....4	DR128	2007-000074	R-CHIP;100ohm,5%,1/10W,TP,1608	1	SA
....4	DR129	2007-000074	R-CHIP;100ohm,5%,1/10W,TP,1608	1	SA
....4	DR130	2007-000074	R-CHIP;100ohm,5%,1/10W,TP,1608	1	SA
....4	DR131	2007-000074	R-CHIP;100ohm,5%,1/10W,TP,1608	1	SA
....4	DR137	2007-000074	R-CHIP;100ohm,5%,1/10W,TP,1608	1	SA
....4	DR138	2007-000074	R-CHIP;100ohm,5%,1/10W,TP,1608	1	SA
....4	DR145	2007-000074	R-CHIP;100ohm,5%,1/10W,TP,1608	1	SA
....4	DR146	2007-000074	R-CHIP;100ohm,5%,1/10W,TP,1608	1	SA
....4	DR147	2007-000074	R-CHIP;100ohm,5%,1/10W,TP,1608	1	SA
....4	DR148	2007-000074	R-CHIP;100ohm,5%,1/10W,TP,1608	1	SA
....4	DR149	2007-000074	R-CHIP;100ohm,5%,1/10W,TP,1608	1	SA
....4	DR150	2007-000074	R-CHIP;100ohm,5%,1/10W,TP,1608	1	SA
....4	DR151	2007-000074	R-CHIP;100ohm,5%,1/10W,TP,1608	1	SA
....4	DR152	2007-000074	R-CHIP;100ohm,5%,1/10W,TP,1608	1	SA
....4	DR160	2007-000074	R-CHIP;100ohm,5%,1/10W,TP,1608	1	SA
....4	DR161	2007-000074	R-CHIP;100ohm,5%,1/10W,TP,1608	1	SA
....4	DR166	2007-000074	R-CHIP;100ohm,5%,1/10W,TP,1608	1	SA
....4	DR171	2007-000074	R-CHIP;100ohm,5%,1/10W,TP,1608	1	SA
....4	DR172	2007-000074	R-CHIP;100ohm,5%,1/10W,TP,1608	1	SA
....4	DR175	2007-000074	R-CHIP;100ohm,5%,1/10W,TP,1608	1	SA
....4	DR180	2007-000074	R-CHIP;100ohm,5%,1/10W,TP,1608	1	SA
....4	DR181	2007-000074	R-CHIP;100ohm,5%,1/10W,TP,1608	1	SA
....4	DR200	2007-000074	R-CHIP;100ohm,5%,1/10W,TP,1608	1	SA
....4	DR201	2007-000074	R-CHIP;100ohm,5%,1/10W,TP,1608	1	SA
....4	DR221	2007-000074	R-CHIP;100ohm,5%,1/10W,TP,1608	1	SA
....4	DR400	2007-000074	R-CHIP;100ohm,5%,1/10W,TP,1608	1	SA
....4	DR401	2007-000074	R-CHIP;100ohm,5%,1/10W,TP,1608	1	SA
....4	DR402	2007-000074	R-CHIP;100ohm,5%,1/10W,TP,1608	1	SA
....4	DR403	2007-000074	R-CHIP;100ohm,5%,1/10W,TP,1608	1	SA
....4	DR404	2007-000074	R-CHIP;100ohm,5%,1/10W,TP,1608	1	SA
....4	DR405	2007-000074	R-CHIP;100ohm,5%,1/10W,TP,1608	1	SA
....4	DR406	2007-000074	R-CHIP;100ohm,5%,1/10W,TP,1608	1	SA
....4	DR407	2007-000074	R-CHIP;100ohm,5%,1/10W,TP,1608	1	SA
....4	DR419	2007-000074	R-CHIP;100ohm,5%,1/10W,TP,1608	1	SA
....4	DR704	2007-000074	R-CHIP;100ohm,5%,1/10W,TP,1608	1	SA
....4	DR162	2007-000076	R-CHIP;330ohm,5%,1/10W,TP,1608	1	SA
....4	DR163	2007-000076	R-CHIP;330ohm,5%,1/10W,TP,1608	1	SA
....4	DR164	2007-000076	R-CHIP;330ohm,5%,1/10W,TP,1608	1	SA
....4	DR165	2007-000076	R-CHIP;330ohm,5%,1/10W,TP,1608	1	SA
....4	DR502	2007-000078	R-CHIP;1Kohm,5%,1/10W,TP,1608	1	SA
....4	DR503	2007-000078	R-CHIP;1Kohm,5%,1/10W,TP,1608	1	SA
....4	DR505	2007-000078	R-CHIP;1Kohm,5%,1/10W,TP,1608	1	SA
....4	DR702	2007-000078	R-CHIP;1Kohm,5%,1/10W,TP,1608	1	SA
....4	DR114	2007-000084	R-CHIP;4.7Kohm,5%,1/10W,TP,1608	1	SA
....4	DR139	2007-000084	R-CHIP;4.7Kohm,5%,1/10W,TP,1608	1	SA

ELECTRONIC SERVICE TIRGOVISTE

Level	Loc. No.	Code No.	Description & Specification	Q'ty	SA/SNA
....4	DR141	2007-000084	R-CHIP;4.7Kohm,5%,1/10W,TP,1608	1	SA
....4	DR142	2007-000084	R-CHIP;4.7Kohm,5%,1/10W,TP,1608	1	SA
....4	DR143	2007-000084	R-CHIP;4.7Kohm,5%,1/10W,TP,1608	1	SA
....4	DR144	2007-000084	R-CHIP;4.7Kohm,5%,1/10W,TP,1608	1	SA
....4	DR153	2007-000084	R-CHIP;4.7Kohm,5%,1/10W,TP,1608	1	SA
....4	DR417	2007-000084	R-CHIP;4.7Kohm,5%,1/10W,TP,1608	1	SA
....4	DR418	2007-000084	R-CHIP;4.7Kohm,5%,1/10W,TP,1608	1	SA
....4	DR701	2007-000084	R-CHIP;4.7Kohm,5%,1/10W,TP,1608	1	SA
....4	DR703	2007-000084	R-CHIP;4.7Kohm,5%,1/10W,TP,1608	1	SA
....4	DR705	2007-000084	R-CHIP;4.7Kohm,5%,1/10W,TP,1608	1	SA
....4	DR707	2007-000084	R-CHIP;4.7Kohm,5%,1/10W,TP,1608	1	SA
....4	DR117	2007-000090	R-CHIP;10Kohm,5%,1/10W,TP,1608	1	SA
....4	DR177	2007-000090	R-CHIP;10Kohm,5%,1/10W,TP,1608	1	SA
....4	DR178	2007-000090	R-CHIP;10Kohm,5%,1/10W,TP,1608	1	SA
....4	DR179	2007-000090	R-CHIP;10Kohm,5%,1/10W,TP,1608	1	SA
....4	DR188	2007-000090	R-CHIP;10Kohm,5%,1/10W,TP,1608	1	SA
....4	DR189	2007-000090	R-CHIP;10Kohm,5%,1/10W,TP,1608	1	SA
....4	DR190	2007-000090	R-CHIP;10Kohm,5%,1/10W,TP,1608	1	SA
....4	DR191	2007-000090	R-CHIP;10Kohm,5%,1/10W,TP,1608	1	SA
....4	DR192	2007-000090	R-CHIP;10Kohm,5%,1/10W,TP,1608	1	SA
....4	DR193	2007-000090	R-CHIP;10Kohm,5%,1/10W,TP,1608	1	SA
....4	DR194	2007-000090	R-CHIP;10Kohm,5%,1/10W,TP,1608	1	SA
....4	DR416	2007-000090	R-CHIP;10Kohm,5%,1/10W,TP,1608	1	SA
....4	DR423	2007-000090	R-CHIP;10Kohm,5%,1/10W,TP,1608	1	SA
....4	DR424	2007-000090	R-CHIP;10Kohm,5%,1/10W,TP,1608	1	SA
....4	DR632	2007-000090	R-CHIP;10Kohm,5%,1/10W,TP,1608	1	SA
....4	DR633	2007-000090	R-CHIP;10Kohm,5%,1/10W,TP,1608	1	SA
....4	DR901	2007-000090	R-CHIP;10Kohm,5%,1/10W,TP,1608	1	SA
....4	DR903	2007-000090	R-CHIP;10Kohm,5%,1/10W,TP,1608	1	SA
....4	DR904	2007-000090	R-CHIP;10Kohm,5%,1/10W,TP,1608	1	SA
....4	DR918	2007-000090	R-CHIP;10Kohm,5%,1/10W,TP,1608	1	SA
....4	DR919	2007-000090	R-CHIP;10Kohm,5%,1/10W,TP,1608	1	SA
....4	DR920	2007-000090	R-CHIP;10Kohm,5%,1/10W,TP,1608	1	SA
....4	DR921	2007-000090	R-CHIP;10Kohm,5%,1/10W,TP,1608	1	SA
....4	DR922	2007-000090	R-CHIP;10Kohm,5%,1/10W,TP,1608	1	SA
....4	DR700	2007-000097	R-CHIP;47Kohm,5%,1/10W,TP,1608	1	SA
....4	DR706	2007-000097	R-CHIP;47Kohm,5%,1/10W,TP,1608	1	SA
....4	DR102	2007-000102	R-CHIP;100Kohm,5%,1/10W,TP,1608	1	SA
....4	DR408	2007-000113	R-CHIP;33ohm,5%,1/10W,TP,1608	1	SA
....4	DR409	2007-000113	R-CHIP;33ohm,5%,1/10W,TP,1608	1	SA
....4	DR410	2007-000113	R-CHIP;33ohm,5%,1/10W,TP,1608	1	SA
....4	DR411	2007-000113	R-CHIP;33ohm,5%,1/10W,TP,1608	1	SA
....4	DR412	2007-000113	R-CHIP;33ohm,5%,1/10W,TP,1608	1	SA
....4	DR413	2007-000113	R-CHIP;33ohm,5%,1/10W,TP,1608	1	SA
....4	DR414	2007-000113	R-CHIP;33ohm,5%,1/10W,TP,1608	1	SA
....4	DR415	2007-000113	R-CHIP;33ohm,5%,1/10W,TP,1608	1	SA
....4	DR601	2007-000113	R-CHIP;33ohm,5%,1/10W,TP,1608	1	SA
....4	DR908	2007-000113	R-CHIP;33ohm,5%,1/10W,TP,1608	1	SA
....4	DR909	2007-000113	R-CHIP;33ohm,5%,1/10W,TP,1608	1	SA
....4	DR910	2007-000113	R-CHIP;33ohm,5%,1/10W,TP,1608	1	SA
....4	DR911	2007-000113	R-CHIP;33ohm,5%,1/10W,TP,1608	1	SA
....4	DR912	2007-000113	R-CHIP;33ohm,5%,1/10W,TP,1608	1	SA
....4	DR913	2007-000113	R-CHIP;33ohm,5%,1/10W,TP,1608	1	SA
....4	DR914	2007-000113	R-CHIP;33ohm,5%,1/10W,TP,1608	1	SA
....4	DR915	2007-000113	R-CHIP;33ohm,5%,1/10W,TP,1608	1	SA
....4	DR999	2007-000113	R-CHIP;33ohm,5%,1/10W,TP,1608	1	SA
....4	DR101	2007-000119	R-CHIP;560ohm,5%,1/10W,TP,1608	1	SA
....4	DR173	2007-000372	R-CHIP;130ohm,5%,1/10W,TP,1608	1	SA
....4	DR205	2007-000372	R-CHIP;130ohm,5%,1/10W,TP,1608	1	SA
....4	DR132	2007-000539	R-CHIP;200ohm,5%,1/10W,TP,1608	1	SA

ELECTRONIC SERVICE TIRGOVISTE

Level	Loc. No.	Code No.	Description & Specification	Q'ty	SA/SNA
....4	DR133	2007-000539	R-CHIP;200ohm,5%,1/10W,TP,1608	1	SA
....4	DR134	2007-000539	R-CHIP;200ohm,5%,1/10W,TP,1608	1	SA
....4	DR135	2007-000539	R-CHIP;200ohm,5%,1/10W,TP,1608	1	SA
....4	DR167	2007-000539	R-CHIP;200ohm,5%,1/10W,TP,1608	1	SA
....4	DR800	2007-000763	R-CHIP;330ohm,1%,1/10W,TP,1608	1	SA
....4	DR801	2007-000763	R-CHIP;330ohm,1%,1/10W,TP,1608	1	SA
....4	DR802	2007-000763	R-CHIP;330ohm,1%,1/10W,TP,1608	1	SA
....4	DR803	2007-000763	R-CHIP;330ohm,1%,1/10W,TP,1608	1	SA
....4	DR804	2007-000763	R-CHIP;330ohm,1%,1/10W,TP,1608	1	SA
....4	DR805	2007-000763	R-CHIP;330ohm,1%,1/10W,TP,1608	1	SA
....4	DR806	2007-000763	R-CHIP;330ohm,1%,1/10W,TP,1608	1	SA
....4	DR807	2007-000763	R-CHIP;330ohm,1%,1/10W,TP,1608	1	SA
....4	DR420	2007-001167	R-CHIP;75ohm,5%,1/10W,TP,1608	1	SA
....4	DR421	2007-001167	R-CHIP;75ohm,5%,1/10W,TP,1608	1	SA
....4	DRA103	2011-001011	R-NET;10Kohm,5%,1/16W,L,CHIP,8P,TP,3.2x1	1	SA
....4	DRA401	2011-001011	R-NET;10Kohm,5%,1/16W,L,CHIP,8P,TP,3.2x1	1	SA
....4	DRA108	2011-001410	R-NET;120OHM,5%,1/16W,L,CHIP,8P,TP,3.2X1	1	SA
....4	DRA109	2011-001410	R-NET;120OHM,5%,1/16W,L,CHIP,8P,TP,3.2X1	1	SA
....4	DRA110	2011-001410	R-NET;120OHM,5%,1/16W,L,CHIP,8P,TP,3.2X1	1	SA
....4	DRA111	2011-001410	R-NET;120OHM,5%,1/16W,L,CHIP,8P,TP,3.2X1	1	SA
....4	DRA112	2011-001410	R-NET;120OHM,5%,1/16W,L,CHIP,8P,TP,3.2X1	1	SA
....4	DRA113	2011-001410	R-NET;120OHM,5%,1/16W,L,CHIP,8P,TP,3.2X1	1	SA
....4	DRA114	2011-001410	R-NET;120OHM,5%,1/16W,L,CHIP,8P,TP,3.2X1	1	SA
....4	DRA115	2011-001410	R-NET;120OHM,5%,1/16W,L,CHIP,8P,TP,3.2X1	1	SA
....4	DRA116	2011-001410	R-NET;120OHM,5%,1/16W,L,CHIP,8P,TP,3.2X1	1	SA
....4	DRA117	2011-001410	R-NET;120OHM,5%,1/16W,L,CHIP,8P,TP,3.2X1	1	SA
....4	DRA118	2011-001410	R-NET;120OHM,5%,1/16W,L,CHIP,8P,TP,3.2X1	1	SA
....4	DRA119	2011-001410	R-NET;120OHM,5%,1/16W,L,CHIP,8P,TP,3.2X1	1	SA
....4	DRA120	2011-001410	R-NET;120OHM,5%,1/16W,L,CHIP,8P,TP,3.2X1	1	SA
....4	DRA121	2011-001410	R-NET;120OHM,5%,1/16W,L,CHIP,8P,TP,3.2X1	1	SA
....4	DRA122	2011-001410	R-NET;120OHM,5%,1/16W,L,CHIP,8P,TP,3.2X1	1	SA
....4	DRA123	2011-001410	R-NET;120OHM,5%,1/16W,L,CHIP,8P,TP,3.2X1	1	SA
....4	DRA124	2011-001410	R-NET;120OHM,5%,1/16W,L,CHIP,8P,TP,3.2X1	1	SA
....4	DRA125	2011-001410	R-NET;120OHM,5%,1/16W,L,CHIP,8P,TP,3.2X1	1	SA
....4	DC100	2203-000257	C-CER,CHIP;10nF,10%,50V,X7R,1608	1	SA
....4	DC102	2203-000257	C-CER,CHIP;10nF,10%,50V,X7R,1608	1	SA
....4	DC105	2203-000257	C-CER,CHIP;10nF,10%,50V,X7R,1608	1	SA
....4	DC107	2203-000257	C-CER,CHIP;10nF,10%,50V,X7R,1608	1	SA
....4	DC109	2203-000257	C-CER,CHIP;10nF,10%,50V,X7R,1608	1	SA
....4	DC111	2203-000257	C-CER,CHIP;10nF,10%,50V,X7R,1608	1	SA
....4	DC112	2203-000257	C-CER,CHIP;10nF,10%,50V,X7R,1608	1	SA
....4	DC114	2203-000257	C-CER,CHIP;10nF,10%,50V,X7R,1608	1	SA
....4	DC116	2203-000257	C-CER,CHIP;10nF,10%,50V,X7R,1608	1	SA
....4	DC118	2203-000257	C-CER,CHIP;10nF,10%,50V,X7R,1608	1	SA
....4	DC801	2203-000659	C-CER,CHIP;0.27nF,5%,50V,C0G,1608	1	SA
....4	DC804	2203-000659	C-CER,CHIP;0.27nF,5%,50V,C0G,1608	1	SA
....4	DC807	2203-000659	C-CER,CHIP;0.27nF,5%,50V,C0G,1608	1	SA
....4	DC810	2203-000659	C-CER,CHIP;0.27nF,5%,50V,C0G,1608	1	SA
....4	DC155	2203-001630	C-CER,CHIP;330nF,+80-20%,16V,Y5V,1608	1	SA
....4	DC700	2203-001630	C-CER,CHIP;330nF,+80-20%,16V,Y5V,1608	1	SA
....4	DC701	2203-001630	C-CER,CHIP;330nF,+80-20%,16V,Y5V,1608	1	SA
....4	DC101	2203-005005	C-CER,CHIP;100nF,10%,16V,X7R,1608	1	SA
....4	DC103	2203-005005	C-CER,CHIP;100nF,10%,16V,X7R,1608	1	SA
....4	DC104	2203-005005	C-CER,CHIP;100nF,10%,16V,X7R,1608	1	SA
....4	DC106	2203-005005	C-CER,CHIP;100nF,10%,16V,X7R,1608	1	SA
....4	DC108	2203-005005	C-CER,CHIP;100nF,10%,16V,X7R,1608	1	SA
....4	DC110	2203-005005	C-CER,CHIP;100nF,10%,16V,X7R,1608	1	SA
....4	DC113	2203-005005	C-CER,CHIP;100nF,10%,16V,X7R,1608	1	SA
....4	DC115	2203-005005	C-CER,CHIP;100nF,10%,16V,X7R,1608	1	SA
....4	DC117	2203-005005	C-CER,CHIP;100nF,10%,16V,X7R,1608	1	SA

ELECTRONIC SERVICE TIRGOVISTE

Level	Loc. No.	Code No.	Description & Specification	Q'ty	SA/SNA
....4	DC119	2203-005005	C-CER,CHIP;100nF,10%,16V,X7R,1608	1	SA
....4	DC120	2203-005005	C-CER,CHIP;100nF,10%,16V,X7R,1608	1	SA
....4	DC126	2203-005005	C-CER,CHIP;100nF,10%,16V,X7R,1608	1	SA
....4	DC127	2203-005005	C-CER,CHIP;100nF,10%,16V,X7R,1608	1	SA
....4	DC128	2203-005005	C-CER,CHIP;100nF,10%,16V,X7R,1608	1	SA
....4	DC129	2203-005005	C-CER,CHIP;100nF,10%,16V,X7R,1608	1	SA
....4	DC130	2203-005005	C-CER,CHIP;100nF,10%,16V,X7R,1608	1	SA
....4	DC131	2203-005005	C-CER,CHIP;100nF,10%,16V,X7R,1608	1	SA
....4	DC132	2203-005005	C-CER,CHIP;100nF,10%,16V,X7R,1608	1	SA
....4	DC133	2203-005005	C-CER,CHIP;100nF,10%,16V,X7R,1608	1	SA
....4	DC134	2203-005005	C-CER,CHIP;100nF,10%,16V,X7R,1608	1	SA
....4	DC135	2203-005005	C-CER,CHIP;100nF,10%,16V,X7R,1608	1	SA
....4	DC136	2203-005005	C-CER,CHIP;100nF,10%,16V,X7R,1608	1	SA
....4	DC137	2203-005005	C-CER,CHIP;100nF,10%,16V,X7R,1608	1	SA
....4	DC138	2203-005005	C-CER,CHIP;100nF,10%,16V,X7R,1608	1	SA
....4	DC139	2203-005005	C-CER,CHIP;100nF,10%,16V,X7R,1608	1	SA
....4	DC140	2203-005005	C-CER,CHIP;100nF,10%,16V,X7R,1608	1	SA
....4	DC141	2203-005005	C-CER,CHIP;100nF,10%,16V,X7R,1608	1	SA
....4	DC142	2203-005005	C-CER,CHIP;100nF,10%,16V,X7R,1608	1	SA
....4	DC143	2203-005005	C-CER,CHIP;100nF,10%,16V,X7R,1608	1	SA
....4	DC144	2203-005005	C-CER,CHIP;100nF,10%,16V,X7R,1608	1	SA
....4	DC145	2203-005005	C-CER,CHIP;100nF,10%,16V,X7R,1608	1	SA
....4	DC146	2203-005005	C-CER,CHIP;100nF,10%,16V,X7R,1608	1	SA
....4	DC147	2203-005005	C-CER,CHIP;100nF,10%,16V,X7R,1608	1	SA
....4	DC148	2203-005005	C-CER,CHIP;100nF,10%,16V,X7R,1608	1	SA
....4	DC149	2203-005005	C-CER,CHIP;100nF,10%,16V,X7R,1608	1	SA
....4	DC150	2203-005005	C-CER,CHIP;100nF,10%,16V,X7R,1608	1	SA
....4	DC151	2203-005005	C-CER,CHIP;100nF,10%,16V,X7R,1608	1	SA
....4	DC152	2203-005005	C-CER,CHIP;100nF,10%,16V,X7R,1608	1	SA
....4	DC153	2203-005005	C-CER,CHIP;100nF,10%,16V,X7R,1608	1	SA
....4	DC203	2203-005005	C-CER,CHIP;100nF,10%,16V,X7R,1608	1	SA
....4	DC400	2203-005005	C-CER,CHIP;100nF,10%,16V,X7R,1608	1	SA
....4	DC401	2203-005005	C-CER,CHIP;100nF,10%,16V,X7R,1608	1	SA
....4	DC402	2203-005005	C-CER,CHIP;100nF,10%,16V,X7R,1608	1	SA
....4	DC403	2203-005005	C-CER,CHIP;100nF,10%,16V,X7R,1608	1	SA
....4	DC404	2203-005005	C-CER,CHIP;100nF,10%,16V,X7R,1608	1	SA
....4	DC500	2203-005005	C-CER,CHIP;100nF,10%,16V,X7R,1608	1	SA
....4	DC501	2203-005005	C-CER,CHIP;100nF,10%,16V,X7R,1608	1	SA
....4	DC502	2203-005005	C-CER,CHIP;100nF,10%,16V,X7R,1608	1	SA
....4	DC503	2203-005005	C-CER,CHIP;100nF,10%,16V,X7R,1608	1	SA
....4	DC504	2203-005005	C-CER,CHIP;100nF,10%,16V,X7R,1608	1	SA
....4	DC505	2203-005005	C-CER,CHIP;100nF,10%,16V,X7R,1608	1	SA
....4	DC506	2203-005005	C-CER,CHIP;100nF,10%,16V,X7R,1608	1	SA
....4	DC507	2203-005005	C-CER,CHIP;100nF,10%,16V,X7R,1608	1	SA
....4	DC508	2203-005005	C-CER,CHIP;100nF,10%,16V,X7R,1608	1	SA
....4	DC509	2203-005005	C-CER,CHIP;100nF,10%,16V,X7R,1608	1	SA
....4	DC510	2203-005005	C-CER,CHIP;100nF,10%,16V,X7R,1608	1	SA
....4	DC511	2203-005005	C-CER,CHIP;100nF,10%,16V,X7R,1608	1	SA
....4	DC512	2203-005005	C-CER,CHIP;100nF,10%,16V,X7R,1608	1	SA
....4	DC513	2203-005005	C-CER,CHIP;100nF,10%,16V,X7R,1608	1	SA
....4	DC514	2203-005005	C-CER,CHIP;100nF,10%,16V,X7R,1608	1	SA
....4	DC601	2203-005005	C-CER,CHIP;100nF,10%,16V,X7R,1608	1	SA
....4	DC612	2203-005005	C-CER,CHIP;100nF,10%,16V,X7R,1608	1	SA
....4	DC614	2203-005005	C-CER,CHIP;100nF,10%,16V,X7R,1608	1	SA
....4	DC631	2203-005005	C-CER,CHIP;100nF,10%,16V,X7R,1608	1	SA
....4	DC632	2203-005005	C-CER,CHIP;100nF,10%,16V,X7R,1608	1	SA
....4	DC633	2203-005005	C-CER,CHIP;100nF,10%,16V,X7R,1608	1	SA
....4	DC902	2203-005005	C-CER,CHIP;100nF,10%,16V,X7R,1608	1	SA
....4	DC903	2203-005005	C-CER,CHIP;100nF,10%,16V,X7R,1608	1	SA
....4	DC905	2203-005005	C-CER,CHIP;100nF,10%,16V,X7R,1608	1	SA

ELECTRONIC SERVICE TIRGOVISTE

Level	Loc. No.	Code No.	Description & Specification	Q'ty	SA/SNA
....4	DC906	2203-005005	C-CER,CHIP;100nF,10%,16V,X7R,1608	1	SA
....4	DC907	2203-005005	C-CER,CHIP;100nF,10%,16V,X7R,1608	1	SA
....4	DC909	2203-005005	C-CER,CHIP;100nF,10%,16V,X7R,1608	1	SA
....4	DC910	2203-005005	C-CER,CHIP;100nF,10%,16V,X7R,1608	1	SA
....4	DC915	2203-005005	C-CER,CHIP;100nF,10%,16V,X7R,1608	1	SA
....4	DC916	2203-005005	C-CER,CHIP;100nF,10%,16V,X7R,1608	1	SA
....4	DC921	2203-005005	C-CER,CHIP;100nF,10%,16V,X7R,1608	1	SA
....4	DC922	2203-005005	C-CER,CHIP;100nF,10%,16V,X7R,1608	1	SA
....4	DC9906	2203-005005	C-CER,CHIP;100nF,10%,16V,X7R,1608	1	SA
....4	DC121	2402-000108	C-AL,SMD;10uF,20%,16V,WT,TP,4.3x4.3x5.2m	1	SA
....4	DC122	2402-000108	C-AL,SMD;10uF,20%,16V,WT,TP,4.3x4.3x5.2m	1	SA
....4	DC123	2402-000108	C-AL,SMD;10uF,20%,16V,WT,TP,4.3x4.3x5.2m	1	SA
....4	DC124	2402-000108	C-AL,SMD;10uF,20%,16V,WT,TP,4.3x4.3x5.2m	1	SA
....4	DC125	2402-000108	C-AL,SMD;10uF,20%,16V,WT,TP,4.3x4.3x5.2m	1	SA
....4	DC602	2402-000108	C-AL,SMD;10uF,20%,16V,WT,TP,4.3x4.3x5.2m	1	SA
....4	DC154	2402-001128	C-AL,SMD;100UF,20%,16V,WT,TP,6.3X5.7MM	1	SA
....4	DC522	2402-001128	C-AL,SMD;100UF,20%,16V,WT,TP,6.3X5.7MM	1	SA
....4	DC611	2402-001128	C-AL,SMD;100UF,20%,16V,WT,TP,6.3X5.7MM	1	SA
....4	DC634	2402-001128	C-AL,SMD;100UF,20%,16V,WT,TP,6.3X5.7MM	1	SA
....4	DC901	2402-001128	C-AL,SMD;100UF,20%,16V,WT,TP,6.3X5.7MM	1	SA
....4	DC904	2402-001128	C-AL,SMD;100UF,20%,16V,WT,TP,6.3X5.7MM	1	SA
....4	DC635	2402-001158	C-AL,SMD;1UF,20%,50V,WT,TP,4X5.2MM	1	SA
....4	DC636	2402-001158	C-AL,SMD;1UF,20%,50V,WT,TP,4X5.2MM	1	SA
....4	DC637	2402-001159	C-AL,SMD;3.3UF,20%,50V,WT,TP,4X5.2MM	1	SA
....4	DC638	2402-001159	C-AL,SMD;3.3UF,20%,50V,WT,TP,4X5.2MM	1	SA
....4	DC202	2402-001216	C-AL,SMD;470uF,20%,16V,WT,TP,10.3x10.3x1	1	SA
....4	DC613	2402-001216	C-AL,SMD;470uF,20%,16V,WT,TP,10.3x10.3x1	1	SA
....4	T0052	2703-000125	INDUCTOR-SMD;10uH,10%,2012	1	SA
....4	T0052	2703-000125	INDUCTOR-SMD;10uH,10%,2012	1	SA
....4	T0052	2703-000125	INDUCTOR-SMD;10uH,10%,2012	1	SA
....4	T0052	2703-000125	INDUCTOR-SMD;10uH,10%,2012	1	SA
....4	DX601	2806-001308	OSCILLATOR-VCXO;27MHZ,-,30PF,TP,3.3V,50M	1	SA
....4	T0568	3301-001569	BEAD-SMD;600ohm,2012,1000mA,TP,520ohm/90	1	SNA
....4	T0568	3301-001569	BEAD-SMD;600ohm,2012,1000mA,TP,520ohm/90	1	SNA
....4	T0568	3301-001569	BEAD-SMD;600ohm,2012,1000mA,TP,520ohm/90	1	SNA
....4	T0568	3301-001569	BEAD-SMD;600ohm,2012,1000mA,TP,520ohm/90	1	SNA
....4	T0568	3301-001569	BEAD-SMD;600ohm,2012,1000mA,TP,520ohm/90	1	SNA
....4	T0568	3301-001569	BEAD-SMD;600ohm,2012,1000mA,TP,520ohm/90	1	SNA
....4	T0568	3301-001569	BEAD-SMD;600ohm,2012,1000mA,TP,520ohm/90	1	SNA
....4	T0568	3301-001569	BEAD-SMD;600ohm,2012,1000mA,TP,520ohm/90	1	SNA
....4	MP1.1	BN41-00684A	PCB-DIGITAL B/D;BORDEAUX,FR-4,6L,1.0,1.6	1	SNA
....4	M0018	BN97-00805L	ASSY MICOM;T-XXXX-XXXX,DTV MODULE,XEF,20	1	SA
.....5	IC115	1107-001475	IC-FLASH MEMORY;29LV320,32MBIT,4MX8/2MX1	1	SA
....4	IC104	0801-002172	IC-CMOS LOGIC;74LCX16244,BUFFER/LINE DRI	1	SA
....4	T0087	1203-003704	IC-POSI.FIXED REG.;G953-18T6U,SOT-223,3P	1	SA
...3	T0066	BP62-00017A	HEAT SINK-ES;SP-50L2HX,A6063S,T2.0,26.2,	1	SNA
1	MP1.0	BN91-01017C	ASSY LCD-AMZ;LE26R71BX/*	1	SNA
..2	M0215	BN07-00254A	LCD-PANEL;T260XW02,8bit,626.0*373.0*50.0	1	SA
1		BN91-01018D	ASSY SHIELD-AUO;LE26R73BDX/XEU,26",CAMBR	1	SNA
..2	M0081	6003-000115	SCREW-TAPTITE;BH,+,B,M3,L6,ZPC(BLK),SWRC	4	SNA
..2	M0081	6003-000115	SCREW-TAPTITE;BH,+,B,M3,L6,ZPC(BLK),SWRC	4	SNA
..2	M0081	6003-000115	SCREW-TAPTITE;BH,+,B,M3,L6,ZPC(BLK),SWRC	2	SNA
..2	M0081	6003-000115	SCREW-TAPTITE;BH,+,B,M3,L6,ZPC(BLK),SWRC	3	SNA
..2	M0081	6003-000115	SCREW-TAPTITE;BH,+,B,M3,L6,ZPC(BLK),SWRC	2	SNA
..2	M0081	6003-000115	SCREW-TAPTITE;BH,+,B,M3,L6,ZPC(BLK),SWRC	1	SNA
..2	M0081	6003-001003	SCREW-TAPTITE;BH,+,B,M4,L12,ZPC(BLK),SWR	2	SNA
..2	M0081	6003-001003	SCREW-TAPTITE;BH,+,B,M4,L12,ZPC(BLK),SWR	6	SNA
..2	M0081	6003-001003	SCREW-TAPTITE;BH,+,B,M4,L12,ZPC(BLK),SWR	1	SNA

ELECTRONIC SERVICE TIRGOVISTE

Level	Loc. No.	Code No.	Description & Specification	Q'ty	SA/SNA
..2	CCM1	6006-000245	SCREW-MACHINE;WSP,PH,+,M4,L8,ZPC(YEL),SW	4	SNA
..2	CCM1	6006-000245	SCREW-MACHINE;WSP,PH,+,M4,L8,ZPC(YEL),SW	1	SNA
..2	T0076	BN39-00615D	CBF HARNESS;BORDEAUX,1617#22,3P,1P,RING,	1	SA
..2	M2893	BN39-00691B	LEAD CONNECTOR;LE32R71BX,UL1007#26,16P,1	1	SA
..2		BN61-02201A	BRACKET-STAND LINK;Bordeaux 32,SECC,T1.6	1	SA
..2		BN61-02207A	BRACKET-PANEL SIDE;Bordeaux 26,SECC,T1.2	4	SA
..2	M0146	BN63-02460A	SHIELD CASE;CAMBRIDGE 26,SECC,T0.8,ITALY	1	SA
..2	T0159	BN96-03058A	ASSY PCB P-SMPS;Bordeaux 26 PFC,LE26R71B	1	SA
..2	M2893	BH39-00362G	LEAD CONNECTOR;SONOMA,UL1007#26,5PIN,100	1	SA
..2	M2893	BN39-00603K	LEAD CONNECTOR;LE32R73BDX,UL1007#26,14P,	1	SA
..2	M2893	BN39-00712D	LEAD CONNECTOR-LVDS;LE32R73BDX,UL1571#30	1	SA
..2	T0447	BN96-03439B	ASSY BRACKET P-PANEL;26,SECC,BUILT-IN,AU	1	SNA
...3	M0081	6003-000115	SCREW-TAPTITE;BH,+,B,M3,L6,ZPC(BLK),SWRC	1	SNA
...3	M0146	BN61-02205B	BRACKET-PANEL TOP;Bordeaux 26,SECC,T1.2	1	SNA
...3		BN61-02206B	BRACKET-PANEL BOTTOM;Bordeaux 26,SECC,T1	1	SNA
...3		BN61-02208A	BRACKET-GUIDE MAIN;Bordeaux 26,SECC,T1.2	1	SNA
...3		BN61-02209A	BRACKET-PLATE;Bordeaux 26,SECC,T1.2,RIGH	1	SNA
...3		BN61-02210A	BRACKET-GUIDE POWER;Bordeaux 26,SECC,T1.	1	SNA
...3		BN61-02394A	BRACKET-PLATE;CAMBRIDGE26,SECC,T1.2	1	SA
...3	M0131	AA63-01437A	GASKET;Bordeaux,Conductive Fabric,20mm,9	1	SNA
...3	M0131	AA63-01438A	GASKET;Bordeaux,Conductive Fabric,5mm,8m	1	SNA
..2	M0114	BN61-02500A	HOLDER-WIRE;NYLON6.6,NATURAL	2	SA
..2		BN96-03590A	ASSY SHIELD P-PCB MAIN;CAMBRIDGE32,SECC	1	SNA
...3	T0603	BN63-02458A	SHIELD-PCB MAIN;CAMBRIDGE 32,SECC,T0.5,U	1	SA
...3	M0131	BN63-02627A	GASKET;Oxford,Conductive Fabric,8,13,30,	1	SA
1	M0045	BN92-01661M	ASSY ACCESSORY;LE26R73BDX/XEF	1	SNA
..2	M0045	BN96-02984M	ASSY ACCESSORY;LE26R73BDX/XEF	1	SA
...3	T0268	3903-000145	CBF-POWER CORD;DT,EU,FP3/YES,U(IEC C13-R	1	SA
...3	T0524	6902-000110	BAG PE;LDPE,T0.05,W250,L400,TRP,28,2	2	SNA
...3	ACCESSORY	AA68-03242E	MANUAL FLYER-01,SAFETY GUIDE;All Model,S	1	SNA
...3	ACCESSORY	AA68-03575C	MANUAL FLYER-01,REGISTRATION C;XEF,FRENC	1	SNA
...3	T0074	BN59-00516A	REMOCON;CAMBRIDGE,TM87B,45,CAMBRIDGE,EUR	1	SA
...3	ACCESSORY	BN63-01798A	CLOTH-CLEAN;RE40**,CLOTH,310,320,RHCM	1	SA
...3	T0531	BN63-02323A	COVER-BOTTOM;23,26,32R71,ABS+PMMA,HB,BK2	1	SA
...3	ACCESSORY	BN68-00514A	MANUAL FLYER-04,WARRANTY CARD;PDP/LCD TV	1	SNA
...3	T0059	BN68-00895A	MANUAL FLYER-CARD;COMM,SAMSUNG,W/P 5G,PR	1	SNA
...3	T0059	BN68-00907A	MANUAL FLYER-CARD;COMM,SAMSUNG,18 LANG,E	1	SNA
...3	T0511	BN68-01007C	MANUAL USERS;COMM,SAMSUNG,Eng/Fre,France	1	SNA
...3	ACCESSORY	BN69-01086A	BOX ACCESSORY-00;COMM,SW1,YEL,-,W573,D63	1	SNA
...3	M0045	BN96-01800A	ASSY ACCESSORY;ROME32,SCREW	1	SA
....4	T0081	6002-001294	SCREW-TAPPING;BH,+,,M4,L16,ZPC(BLK)	4	SA
....4	ACCESSORY	6902-000128	BAG ZIPPER;LDPE,T0.05,W200,L150,TRP,8,2-	1	SNA
1	M0113	BN92-01666A	ASSY P/MATERIAL;26R71,BORDEAUX	1	SNA
..2	T0376	6902-000061	BAG AIR;LDPE,T0.2,L1000,W500,TRP,,,	0.031	SNA
..2	T0524	6902-000358	BAG PE;HDPE/NITRON(DOUBLE),T0.02/T0.5,W9	1	SNA
..2	T0376	6902-000379	BAG AIR;LDPE,T0.2,W1000,L1800,TRP,-,--	0.005	SNA
..2		6902-000604	BAG WRAPPING;LDPE,T0.02,W500,L10000,TRP,	4.02	SNA
1	M0003	BN92-01709C	ASSY BOX;26R74,EO(XEF,XEG),CAMBRIDGE-2	1	SNA
..2		BN69-01344C	BOX-01,SET;26R74,DY-01,AB,YEL,A1,IDTV(GE	1.02	SA
1	M0019	BN92-01801S	ASSY LABEL;LE26R73BD,LE26R74BDX/XEF	1	SNA

ELECTRONIC SERVICE TIRGOVISTE

6-5 LE32R74BDX/XEF Parts List

Level	Loc. No.	Code No.	Description & Specification	Q'ty	SA/SNA
0		LE32R74BDX/XEF	LE32R74BD,R62C/32R70-GLY,32,LCD-TV,FRANC	0	
1	M0216	BN90-00842A	ASSY STAND;32R71,BORDEAUX	1	SNA
..2	M0013	BN96-02998A	ASSY STAND P-BASE;32R71,ABS+PMMA,HB,BK23	1	SA
...3	T0081	6002-001294	SCREW-TAPPING;BH,+,,M4,L16,ZPC(BLK)	4	SA
...3	M0081	6003-001239	SCREW-TAPTITE;FH,+,B,M4,L10,ZPC(YEL),SWR	4	SA
...3		BN61-02192A	GUIDE-STAND;26,32R71,ABS,V0,BLK	1	SNA
...3		BN61-02204A	HOLDER-SWIVEL RING;26,32R71,ACETAL,BLK	1	SNA
...3		BN61-02232A	HOLDER-SWIVEL RING;32R71,ACETAL NATUAL,T	1	SNA
...3		BN61-02233A	HOLDER-SWIVEL RING;32R71,ACETAL NATUAL,B	1	SNA
...3		BN61-02235A	BRACKET-STAND BOTTOM;BORDEAUX 32,SECC,T2	1	SNA
...3		BN61-02236A	BRACKET-HINGE SWIVEL;BORDEAUX 32,SECC,T1	1	SNA
...3	T0004	BN63-02321A	COVER-STAND BASE;32R71,ABS+PMMA,HB,BK23,	1	SNA
...3		BN63-02322A	COVER-STAND SUB;32R71,ABS+PMMA,HB,BK23,H	1	SA
...3	T0132	BN73-00052A	RUBBER FOOT;ARES 17,SILICON,DIA 17 * T1.	8	SNA
...3	STAND	BN63-02183D	COVER-SHEET;Rhcm,PE Vinyl,T0.05,680mm,20	0.4	SNA
...3	T0514	BN61-02367A	BRACKET-SUPPORT;BORDEAUX 32,SECC,T2.0	1	SNA
..2	T0524	6902-000241	BAG PE;NITRON/HDPE,T0.5/T0.012,W600,L600	1	SNA
1	M0002	BN90-00873A	ASSY COVER REAR;32R73,EO,CAMBRIDGE	1	SNA
..2	T0081	6002-001294	SCREW-TAPPING;BH,+,,M4,L16,ZPC(BLK)	2	SA
..2	T0081	6002-001294	SCREW-TAPPING;BH,+,,M4,L16,ZPC(BLK)	13	SA
..2	M0013	BN96-03244A	ASSY COVER P-REAR;32R73,EO,ABS+PMMA,HB,B	1	SA
...3	T0101	BN61-02032A	BRACKET-WALL;32,MGM,SECC,T1.6	2	SA
...3	M0006	BN63-02455A	COVER-REAR;32R73,EO,ABS+PMMA,HB,BK23,H/G	1	SA
...3	T0071	BN64-00444F	INLAY-TERMINAL;CAMBRIDGE32,37,40,PS SHEE	1	SA
...3		BN63-02183F	COVER-SHEET;Rhcm,PE Vinyl,T0.05,900mm,20	0.7	SNA
...3	T0064	BN65-00002A	CLAMPER CORE;BORDEAUX,PP,V0,BLK	1	SA
1	M0001	BN90-00891B	ASSY COVER FRONT;32R74,EO,CAMBRIDGE	1	SNA
..2	M0081	6003-001003	SCREW-TAPTITE;BH,+,B,M4,L12,ZPC(BLK),SWR	1	SNA
..2	M0081	6003-001003	SCREW-TAPTITE;BH,+,B,M4,L12,ZPC(BLK),SWR	2	SNA
..2	T0003	BN96-03259B	ASSY COVER P-FRONT;32R74,EO,ABS+PMMA,HB,	1	SA
...3	M0081	6003-001003	SCREW-TAPTITE;BH,+,B,M4,L12,ZPC(BLK),SWR	2	SNA
...3	T0060	BN61-02432A	SPRING ETC;STS-304 SUS,D8.3,L7,T0.5	1	SA
...3	C/F	BN63-02183F	COVER-SHEET;Rhcm,PE Vinyl,T0.05,900mm,20	1.48	SNA
...3	M0112	BN63-02398B	COVER-FRONT;32R74,EO,ABS+PMMA,HB,BK23,S/	1	SNA
...3	T0056	BN63-02400A	COVER-DECORATION;32R72,HIPS,HB,GR503,SVM	1	SNA
...3	T0059	BN64-00379A	INDICATOR LED;ROME-II,23,PC,CLEAR	1	SNA
...3	T0061	BN64-00453A	WINDOW-REMOCON;32R71,PC,V0,VIOLET,DIFFUS	1	SNA
...3	T0054	BN64-00465A	KNOB-DECORATION;26,32,37,40R72,ABS,HB,GR	1	SNA
...3	T0023	BN64-00466A	KNOB POWER;BORDEAUX-2,26,32,40,ABS HB,G4	1	SNA
...3		BN96-03404A	ASSY BOARD P-FUNCTION&KNOB;Bordeaux,CT50	1	SNA
....4	T0022	BN64-00442A	KNOB CONTROL;26,32,40R71,PC,BLK,ACRYL CL	1	SNA
....4	M0145	BN96-03045A	ASSY BOARD P-FUNCTION;BORDEAUX,FUNCTION	1	SA
...3	M0146	BN96-03437A	ASSY BOARD P-POWER;BORDEAUX2,CT5000-4150	1	SA
..2	T0175	BN96-03266A	ASSY SPEAKER P;8ohm,Bordeuax2, 32,Left,1	1	SA
..2	T0175	BN96-03267A	ASSY SPEAKER P;8ohm,Bordeuax2, 32,Right,	1	SA
1	M0017	BN91-01006G	ASSY CHASSIS;LE32R73BDX/XEF	1	SNA
..2	M0014	BN94-00865A	ASSY PCB MAIN;LE32R73BDX/XEU,CAMBRIDGE	1	SA
...3	T0245	0202-001522	SOLDER-WIRE FLUX;LFA3-107,-,D1.2,96.5Sn/	0.25	SNA
...3	JA2007	3701-001294	CONNECTOR-DSUB;15P,3R,FEMALE,STRAIGHT,AU	1	SA
...3	CN902	3703-001600	CONNECTOR-BACK PANEL;32P,2R,FEMALE,ANGLE	1	SA
...3	CN902	3703-001600	CONNECTOR-BACK PANEL;32P,2R,FEMALE,ANGLE	1	SA
...3	CN4002	3711-004484	HEADER-BOARD TO CABLE;BOX,5P,1R,2mm,STRA	1	SA
...3	TEST3001	3711-004484	HEADER-BOARD TO CABLE;BOX,5P,1R,2mm,STRA	1	SA
...3	CN2002_32	3711-004909	HEADER-BOARD TO CABLE;BOX,14P,2R,2MM,ANG	1	SA
...3	CN4004	3711-005606	HEADER-BOARD TO CABLE;BOX,30P,2R,2mm,STR	1	SA
...3	CN1001	3711-005942	HEADER-BOARD TO CABLE;BOX,16P,1R,2mm,STR	1	SA

ELECTRONIC SERVICE TUBGOVISTE

Level	Loc. No.	Code No.	Description & Specification	Q'ty	SA/SNA
...3	JA2001	3722-000498	JACK-SCART;21P,-,SN,BLK,NO	1	SA
...3	JA2005	3722-000498	JACK-SCART;21P,-,SN,BLK,NO	1	SA
...3	JA2003	3722-001061	JACK-PHONE;1P,3.6PI,AG,BLK,N	1	SA
...3	JA2006	3722-001061	JACK-PHONE;1P,3.6PI,AG,BLK,N	1	SA
...3	JA2010	3722-002360	JACK-PIN;3P,AU,GRN/BLU/RED,STRAIGHT	1	SA
...3	JA2002	3722-002362	JACK-PIN;2P,Sn,WHT/RED,STRAIGHT	1	SA
...3	JA2004	3722-002362	JACK-PIN;2P,Sn,WHT/RED,STRAIGHT	1	SA
...3	JA2009	3722-002362	JACK-PIN;2P,Sn,WHT/RED,STRAIGHT	1	SA
...3	CIS3	BN40-00080A	TUNER;DNOS403ZH261B(S),DNOS403ZH261B(S),	1	SA
...3	T0852	BN96-01470A	ASSY BOARD P-OPTICAL;HP-P5581,OPTICAL	1	SA
....4	CN906	3707-001067	CONNECTOR-OPTICAL;PLUG,SM,-,4.4/2.0mm	1	SA
...3	T0510	BN97-00829A	ASSY SMD-MAIN;LE32R73BDX/XEU,CAMBRIDGE	1	SNA
....4	CIS05	0202-001477	SOLDER-CREAM;LST309-M,-,D20~45§-,96.5Sn/	3.571	SNA
....4	D2003	0401-001056	DIODE-SWITCHING;MMBD4148SE,100V,200mA,SO	1	SA
....4	D2010	0401-001056	DIODE-SWITCHING;MMBD4148SE,100V,200mA,SO	1	SA
....4	D2011	0401-001056	DIODE-SWITCHING;MMBD4148SE,100V,200mA,SO	1	SA
....4	D2012	0401-001056	DIODE-SWITCHING;MMBD4148SE,100V,200mA,SO	1	SA
....4	D2013	0401-001056	DIODE-SWITCHING;MMBD4148SE,100V,200mA,SO	1	SA
....4	D2016	0401-001056	DIODE-SWITCHING;MMBD4148SE,100V,200mA,SO	1	SA
....4	D2017	0401-001056	DIODE-SWITCHING;MMBD4148SE,100V,200mA,SO	1	SA
....4	D2018	0401-001056	DIODE-SWITCHING;MMBD4148SE,100V,200mA,SO	1	SA
....4	D2019	0401-001056	DIODE-SWITCHING;MMBD4148SE,100V,200mA,SO	1	SA
....4	D2020	0401-001056	DIODE-SWITCHING;MMBD4148SE,100V,200mA,SO	1	SA
....4	D2021	0401-001056	DIODE-SWITCHING;MMBD4148SE,100V,200mA,SO	1	SA
....4	D2022	0401-001056	DIODE-SWITCHING;MMBD4148SE,100V,200mA,SO	1	SA
....4	D2023	0401-001056	DIODE-SWITCHING;MMBD4148SE,100V,200mA,SO	1	SA
....4	D2032	0401-001056	DIODE-SWITCHING;MMBD4148SE,100V,200mA,SO	1	SA
....4	D2033	0401-001056	DIODE-SWITCHING;MMBD4148SE,100V,200mA,SO	1	SA
....4	D2034	0401-001056	DIODE-SWITCHING;MMBD4148SE,100V,200mA,SO	1	SA
....4	D2044	0401-001056	DIODE-SWITCHING;MMBD4148SE,100V,200mA,SO	1	SA
....4	D2057	0401-001056	DIODE-SWITCHING;MMBD4148SE,100V,200mA,SO	1	SA
....4	D5001	0401-001056	DIODE-SWITCHING;MMBD4148SE,100V,200mA,SO	1	SA
....4	D5002	0401-001056	DIODE-SWITCHING;MMBD4148SE,100V,200mA,SO	1	SA
....4	D5003	0401-001056	DIODE-SWITCHING;MMBD4148SE,100V,200mA,SO	1	SA
....4	D5004	0401-001056	DIODE-SWITCHING;MMBD4148SE,100V,200mA,SO	1	SA
....4	D5005	0401-001056	DIODE-SWITCHING;MMBD4148SE,100V,200mA,SO	1	SA
....4	D5006	0401-001056	DIODE-SWITCHING;MMBD4148SE,100V,200mA,SO	1	SA
....4	D1001	0402-000553	DIODE-RECTIFIER;SS24,40V,2A,DO-214AA,TP	1	SA
....4	D1004	0402-000553	DIODE-RECTIFIER;SS24,40V,2A,DO-214AA,TP	1	SA
....4	D1008	0403-000258	DIODE-ZENER;BZX84C5V6,5.2-6V,225mW,SOT-2	1	SA
....4	D3003	0403-000258	DIODE-ZENER;BZX84C5V6,5.2-6V,225mW,SOT-2	1	SA
....4	D2001	0403-000620	DIODE-ZENER;RLZ5.6B,5.45-5.73V,500mW,LL-	1	SA
....4	D2002	0403-000620	DIODE-ZENER;RLZ5.6B,5.45-5.73V,500mW,LL-	1	SA
....4	D2040	0403-000620	DIODE-ZENER;RLZ5.6B,5.45-5.73V,500mW,LL-	1	SA
....4	D2041	0403-000620	DIODE-ZENER;RLZ5.6B,5.45-5.73V,500mW,LL-	1	SA
....4	D2042	0403-000620	DIODE-ZENER;RLZ5.6B,5.45-5.73V,500mW,LL-	1	SA
....4	D2043	0403-000620	DIODE-ZENER;RLZ5.6B,5.45-5.73V,500mW,LL-	1	SA
....4	D2064	0403-000620	DIODE-ZENER;RLZ5.6B,5.45-5.73V,500mW,LL-	1	SA
....4	D2065	0403-000620	DIODE-ZENER;RLZ5.6B,5.45-5.73V,500mW,LL-	1	SA
....4	D3006	0403-000620	DIODE-ZENER;RLZ5.6B,5.45-5.73V,500mW,LL-	1	SA
....4	D3008	0403-000620	DIODE-ZENER;RLZ5.6B,5.45-5.73V,500mW,LL-	1	SA
....4	D4001	0403-000620	DIODE-ZENER;RLZ5.6B,5.45-5.73V,500mW,LL-	1	SA
....4	D4002	0403-000620	DIODE-ZENER;RLZ5.6B,5.45-5.73V,500mW,LL-	1	SA
....4	D4003	0403-000620	DIODE-ZENER;RLZ5.6B,5.45-5.73V,500mW,LL-	1	SA
....4	D4005	0403-000620	DIODE-ZENER;RLZ5.6B,5.45-5.73V,500mW,LL-	1	SA
....4	D4006	0403-000620	DIODE-ZENER;RLZ5.6B,5.45-5.73V,500mW,LL-	1	SA
....4	D4007	0403-000620	DIODE-ZENER;RLZ5.6B,5.45-5.73V,500mW,LL-	1	SA
....4	D4008	0403-000620	DIODE-ZENER;RLZ5.6B,5.45-5.73V,500mW,LL-	1	SA
....4	D4009	0403-000620	DIODE-ZENER;RLZ5.6B,5.45-5.73V,500mW,LL-	1	SA
....4	D4010	0403-000620	DIODE-ZENER;RLZ5.6B,5.45-5.73V,500mW,LL-	1	SA

ELECTRONICSERVICE TIRGOVISTE

Level	Loc. No.	Code No.	Description & Specification	Q'ty	SA/SNA
....4	D4011	0403-000620	DIODE-ZENER;RLZ5.6B,5.45-5.73V,500mW,LL-	1	SA
....4	D4012	0403-000620	DIODE-ZENER;RLZ5.6B,5.45-5.73V,500mW,LL-	1	SA
....4	D2004	0403-001016	DIODE-ZENER;RLZ6.2B,5.96-6.27V,500mW,LL-	1	SA
....4	D2009	0403-001169	DIODE-ZENER;RLZ16C,15.96-16.51V,500MW,LL	1	SA
....4	D2039	0403-001169	DIODE-ZENER;RLZ16C,15.96-16.51V,500MW,LL	1	SA
....4	D2005	0406-001172	DIODE-TVS;CDS3C30GTH,48V,0W,SMD	1	SA
....4	D2006	0406-001172	DIODE-TVS;CDS3C30GTH,48V,0W,SMD	1	SA
....4	D2007	0406-001172	DIODE-TVS;CDS3C30GTH,48V,0W,SMD	1	SA
....4	D2008	0406-001172	DIODE-TVS;CDS3C30GTH,48V,0W,SMD	1	SA
....4	D2014	0406-001172	DIODE-TVS;CDS3C30GTH,48V,0W,SMD	1	SA
....4	D2015	0406-001172	DIODE-TVS;CDS3C30GTH,48V,0W,SMD	1	SA
....4	D2024	0406-001172	DIODE-TVS;CDS3C30GTH,48V,0W,SMD	1	SA
....4	D2025	0406-001172	DIODE-TVS;CDS3C30GTH,48V,0W,SMD	1	SA
....4	D2026	0406-001172	DIODE-TVS;CDS3C30GTH,48V,0W,SMD	1	SA
....4	D2027	0406-001172	DIODE-TVS;CDS3C30GTH,48V,0W,SMD	1	SA
....4	D2028	0406-001172	DIODE-TVS;CDS3C30GTH,48V,0W,SMD	1	SA
....4	D2029	0406-001172	DIODE-TVS;CDS3C30GTH,48V,0W,SMD	1	SA
....4	D2030	0406-001172	DIODE-TVS;CDS3C30GTH,48V,0W,SMD	1	SA
....4	D2031	0406-001172	DIODE-TVS;CDS3C30GTH,48V,0W,SMD	1	SA
....4	D2035	0406-001172	DIODE-TVS;CDS3C30GTH,48V,0W,SMD	1	SA
....4	D2036	0406-001172	DIODE-TVS;CDS3C30GTH,48V,0W,SMD	1	SA
....4	D2037	0406-001172	DIODE-TVS;CDS3C30GTH,48V,0W,SMD	1	SA
....4	D2038	0406-001172	DIODE-TVS;CDS3C30GTH,48V,0W,SMD	1	SA
....4	D2051	0406-001172	DIODE-TVS;CDS3C30GTH,48V,0W,SMD	1	SA
....4	D2052	0406-001172	DIODE-TVS;CDS3C30GTH,48V,0W,SMD	1	SA
....4	D2054	0406-001172	DIODE-TVS;CDS3C30GTH,48V,0W,SMD	1	SA
....4	D2055	0406-001172	DIODE-TVS;CDS3C30GTH,48V,0W,SMD	1	SA
....4	D2056	0406-001172	DIODE-TVS;CDS3C30GTH,48V,0W,SMD	1	SA
....4	D1002	0407-000123	DIODE-ARRAY;DAN202K,80V,100mA,CA2-3,SOT-	1	SA
....4	D1009	0407-000123	DIODE-ARRAY;DAN202K,80V,100mA,CA2-3,SOT-	1	SA
....4	D3001	0407-000123	DIODE-ARRAY;DAN202K,80V,100mA,CA2-3,SOT-	1	SA
....4	D3002	0407-000123	DIODE-ARRAY;DAN202K,80V,100mA,CA2-3,SOT-	1	SA
....4	D3007_32	0407-000123	DIODE-ARRAY;DAN202K,80V,100mA,CA2-3,SOT-	1	SA
....4	Q1007	0501-000280	TR-SMALL SIGNAL;KSA1182,PNP,150MW,SOT-23	1	SA
....4	Q1001	0501-000342	TR-SMALL SIGNAL;KSC1623-Y,NPN,200mW,SOT-	1	SA
....4	Q1002	0501-000342	TR-SMALL SIGNAL;KSC1623-Y,NPN,200mW,SOT-	1	SA
....4	Q1005	0501-000342	TR-SMALL SIGNAL;KSC1623-Y,NPN,200mW,SOT-	1	SA
....4	Q1006	0501-000342	TR-SMALL SIGNAL;KSC1623-Y,NPN,200mW,SOT-	1	SA
....4	Q1008	0501-000342	TR-SMALL SIGNAL;KSC1623-Y,NPN,200mW,SOT-	1	SA
....4	Q1009	0501-000342	TR-SMALL SIGNAL;KSC1623-Y,NPN,200mW,SOT-	1	SA
....4	Q1010	0501-000342	TR-SMALL SIGNAL;KSC1623-Y,NPN,200mW,SOT-	1	SA
....4	Q1011	0501-000342	TR-SMALL SIGNAL;KSC1623-Y,NPN,200mW,SOT-	1	SA
....4	Q1013	0501-000342	TR-SMALL SIGNAL;KSC1623-Y,NPN,200mW,SOT-	1	SA
....4	Q1014	0501-000342	TR-SMALL SIGNAL;KSC1623-Y,NPN,200mW,SOT-	1	SA
....4	Q2001	0501-000342	TR-SMALL SIGNAL;KSC1623-Y,NPN,200mW,SOT-	1	SA
....4	Q3001	0501-000342	TR-SMALL SIGNAL;KSC1623-Y,NPN,200mW,SOT-	1	SA
....4	Q3003	0501-000342	TR-SMALL SIGNAL;KSC1623-Y,NPN,200mW,SOT-	1	SA
....4	Q3008	0501-000342	TR-SMALL SIGNAL;KSC1623-Y,NPN,200mW,SOT-	1	SA
....4	Q3010	0501-000342	TR-SMALL SIGNAL;KSC1623-Y,NPN,200mW,SOT-	1	SA
....4	Q3011	0501-000342	TR-SMALL SIGNAL;KSC1623-Y,NPN,200mW,SOT-	1	SA
....4	Q4001	0501-000342	TR-SMALL SIGNAL;KSC1623-Y,NPN,200mW,SOT-	1	SA
....4	Q5010	0501-000342	TR-SMALL SIGNAL;KSC1623-Y,NPN,200mW,SOT-	1	SA
....4	Q1003	0501-002080	TR-SMALL SIGNAL;2SC2412K,NPN,200mW,SC-59	1	SA
....4	Q1004	0501-002080	TR-SMALL SIGNAL;2SC2412K,NPN,200mW,SC-59	1	SA
....4	Q5011	0501-002080	TR-SMALL SIGNAL;2SC2412K,NPN,200mW,SC-59	1	SA
....4	Q409	0505-000110	FET-SILICON;2N7002,N,60V,115mA,7.5ohm,0.	1	SA
....4	Q409	0505-000110	FET-SILICON;2N7002,N,60V,115mA,7.5ohm,0.	1	SA
....4	Q409	0505-000110	FET-SILICON;2N7002,N,60V,115mA,7.5ohm,0.	1	SA
....4	Q409	0505-000110	FET-SILICON;2N7002,N,60V,115mA,7.5ohm,0.	1	SA
....4	Q409	0505-000110	FET-SILICON;2N7002,N,60V,115mA,7.5ohm,0.	1	SA

ELECTRONIC SERVICE TIRGOVISTE

Level	Loc. No.	Code No.	Description & Specification	Q'ty	SA/SNA
....4	Q409	0505-001170	FET-SILICON;SI9933ADY-T1,P,-20V,3.4A,0.0	1	SA
....4	IC104	0801-002095	IC-CMOS LOGIC;74LCX245,TRANSCEIVER,TSSOP	1	SA
....4	IC3002	0903-001432	IC-MICROCOMPUTER;M30840SGP,16Bit,LQFP,10	1	SA
....4	IC1003	1001-000164	IC-ANALOG MULTIPLEX;74HC4052,CMOS,SOP,16	1	SA
....4	IC1006	1001-000164	IC-ANALOG MULTIPLEX;74HC4052,CMOS,SOP,16	1	SA
....4	IC106	1001-001082	IC-VIDEO SWITCH;BA7657F,-,SOP,24P,300MIL	1	SA
....4	IC3006	1001-001109	IC-ANALOG SWITCH;FST3125M,BUS SWITCH & C	1	SA
....4	IC5005	1001-001109	IC-ANALOG SWITCH;FST3125M,BUS SWITCH & C	1	SA
....4	IC107	1002-001399	IC-D/A CONVERTER;PCM1754,24BIT,SSOP,16P,	1	SA
....4	IC110	1006-001076	IC-DRIVER/RECEIVER;MAX232ECWE+T,SOP,16P,	1	SA
....4	IC112	1103-000129	IC-EEPROM;24C02,2Kbit,256x8Bit,SOP,8P,5x	1	SA
....4	IC112	1103-000129	IC-EEPROM;24C02,2Kbit,256x8Bit,SOP,8P,5x	1	SA
....4	IC112	1103-001279	IC-EEPROM;24C32,32Kbit,4Kx8Bit,SOP,8P,5x	1	SA
....4	IC5002	1105-001538	IC-VIDEO RAM;K4D263238,-,128M,4x1Mx32Bit	1	SA
....4	DU410	1201-000166	IC-OP AMP;LM358,SOP,ST,8P,150MIL,DUAL,10	1	SA
....4	T0085	1201-002136	IC-AUDIO AMP;LM4810,MSOP,8P,3x3mm,DUAL,-	1	SA
....4	T0085	1201-002246	IC-AUDIO AMP;STA323W,SO,36P,15.9x11mm,-,	1	SA
....4	IC150	1203-001009	IC-SWITCH REG.;3172,SOP,8P,244MIL,PLASTI	1	SA
....4	IC3009	1203-001559	IC-RESET;DS1834A,SOIC,8P,150MIL,PLASTIC,	1	SA
....4	T0087	1203-001815	IC-POSI.FIXED REG.;78M09,TO-252,3P,-,PLA	1	SA
....4	T0087	1203-001816	IC-POSI.FIXED REG.;78M08,TO-252,3P,-,PLA	1	SA
....4	IC3008_32	1203-001824	IC-VOL. DETECTOR;7042,SOT-89,3P,-,PLASTI	1	SA
....4	T0087	1203-002842	IC-POSI.FIXED REG.;AP1117D-33A,TO-252,3P	1	SA
....4	T0087	1203-002842	IC-POSI.FIXED REG.;AP1117D-33A,TO-252,3P	1	SA
....4	T0087	1203-002855	IC-POSI.FIXED REG.;MC33269DTRK-5.0,DPRK,	1	SA
....4	T0087	1203-002974	IC-POSI.FIXED REG.;AP1117D-25A,TO-252,3P	1	SA
....4	T0170	1203-003059	IC-SWITCH VOL. REG.;MP1583,SOIC,8P,4.9x3	1	SA
....4	IC1009	1204-002464	IC-AUDIO PROCESSOR;STV8257DSX,TQFP,80P,1	1	SA
....4	IC118	1204-002503	IC-VIDEO PROCESS;SVP-PX56-7256,PQFP,256P	1	SNA
....4	R5026	2007-000043	R-CHIP;1Kohm,1%,1/10W,TP,1608	1	SA
....4	R5029	2007-000043	R-CHIP;1Kohm,1%,1/10W,TP,1608	1	SA
....4	R3088	2007-000052	R-CHIP;10Kohm,1%,1/10W,TP,1608	1	SA
....4	R3100	2007-000052	R-CHIP;10Kohm,1%,1/10W,TP,1608	1	SA
....4	R3101	2007-000052	R-CHIP;10Kohm,1%,1/10W,TP,1608	1	SA
....4	R3102	2007-000052	R-CHIP;10Kohm,1%,1/10W,TP,1608	1	SA
....4	R3103	2007-000052	R-CHIP;10Kohm,1%,1/10W,TP,1608	1	SA
....4	R3104	2007-000052	R-CHIP;10Kohm,1%,1/10W,TP,1608	1	SA
....4	R3105	2007-000052	R-CHIP;10Kohm,1%,1/10W,TP,1608	1	SA
....4	R3106	2007-000052	R-CHIP;10Kohm,1%,1/10W,TP,1608	1	SA
....4	R3107	2007-000052	R-CHIP;10Kohm,1%,1/10W,TP,1608	1	SA
....4	R3130	2007-000052	R-CHIP;10Kohm,1%,1/10W,TP,1608	1	SA
....4	R3141	2007-000052	R-CHIP;10Kohm,1%,1/10W,TP,1608	1	SA
....4	R5013	2007-000060	R-CHIP;100Kohm,1%,1/10W,TP,1608	1	SA
....4	R1066	2007-000067	R-CHIP;15Kohm,1%,1/10W,TP,1608	1	SA
....4	R1059	2007-000070	R-CHIP;0ohm,5%,1/10W,TP,1608	1	SA
....4	R1085	2007-000070	R-CHIP;0ohm,5%,1/10W,TP,1608	1	SA
....4	R1086	2007-000070	R-CHIP;0ohm,5%,1/10W,TP,1608	1	SA
....4	R1087	2007-000070	R-CHIP;0ohm,5%,1/10W,TP,1608	1	SA
....4	R2055	2007-000070	R-CHIP;0ohm,5%,1/10W,TP,1608	1	SA
....4	R2064	2007-000070	R-CHIP;0ohm,5%,1/10W,TP,1608	1	SA
....4	R2080	2007-000070	R-CHIP;0ohm,5%,1/10W,TP,1608	1	SA
....4	R3003	2007-000070	R-CHIP;0ohm,5%,1/10W,TP,1608	1	SA
....4	R3019	2007-000070	R-CHIP;0ohm,5%,1/10W,TP,1608	1	SA
....4	R3024	2007-000070	R-CHIP;0ohm,5%,1/10W,TP,1608	1	SA
....4	R3025_LVDS	2007-000070	R-CHIP;0ohm,5%,1/10W,TP,1608	1	SA
....4	R3026	2007-000070	R-CHIP;0ohm,5%,1/10W,TP,1608	1	SA
....4	R3027	2007-000070	R-CHIP;0ohm,5%,1/10W,TP,1608	1	SA
....4	R3028	2007-000070	R-CHIP;0ohm,5%,1/10W,TP,1608	1	SA
....4	R3029	2007-000070	R-CHIP;0ohm,5%,1/10W,TP,1608	1	SA
....4	R3031	2007-000070	R-CHIP;0ohm,5%,1/10W,TP,1608	1	SA

ELECTRONIC SERVICE TIRGOVISTE

Level	Loc. No.	Code No.	Description & Specification	Q'ty	SA/SNA
....4	R3032	2007-000070	R-CHIP;0ohm,5%,1/10W,TP,1608	1	SA
....4	R3033	2007-000070	R-CHIP;0ohm,5%,1/10W,TP,1608	1	SA
....4	R3035	2007-000070	R-CHIP;0ohm,5%,1/10W,TP,1608	1	SA
....4	R3037	2007-000070	R-CHIP;0ohm,5%,1/10W,TP,1608	1	SA
....4	R3039	2007-000070	R-CHIP;0ohm,5%,1/10W,TP,1608	1	SA
....4	R3040	2007-000070	R-CHIP;0ohm,5%,1/10W,TP,1608	1	SA
....4	R3041	2007-000070	R-CHIP;0ohm,5%,1/10W,TP,1608	1	SA
....4	R3043	2007-000070	R-CHIP;0ohm,5%,1/10W,TP,1608	1	SA
....4	R3047_LVDS	2007-000070	R-CHIP;0ohm,5%,1/10W,TP,1608	1	SA
....4	R3089	2007-000070	R-CHIP;0ohm,5%,1/10W,TP,1608	1	SA
....4	R3090	2007-000070	R-CHIP;0ohm,5%,1/10W,TP,1608	1	SA
....4	R3117	2007-000070	R-CHIP;0ohm,5%,1/10W,TP,1608	1	SA
....4	R3118	2007-000070	R-CHIP;0ohm,5%,1/10W,TP,1608	1	SA
....4	R3132	2007-000070	R-CHIP;0ohm,5%,1/10W,TP,1608	1	SA
....4	R4001	2007-000070	R-CHIP;0ohm,5%,1/10W,TP,1608	1	SA
....4	R4002	2007-000070	R-CHIP;0ohm,5%,1/10W,TP,1608	1	SA
....4	R4003	2007-000070	R-CHIP;0ohm,5%,1/10W,TP,1608	1	SA
....4	R4012	2007-000070	R-CHIP;0ohm,5%,1/10W,TP,1608	1	SA
....4	R4016	2007-000070	R-CHIP;0ohm,5%,1/10W,TP,1608	1	SA
....4	R4017	2007-000070	R-CHIP;0ohm,5%,1/10W,TP,1608	1	SA
....4	R4018	2007-000070	R-CHIP;0ohm,5%,1/10W,TP,1608	1	SA
....4	R4019	2007-000070	R-CHIP;0ohm,5%,1/10W,TP,1608	1	SA
....4	R4032	2007-000070	R-CHIP;0ohm,5%,1/10W,TP,1608	1	SA
....4	R4033	2007-000070	R-CHIP;0ohm,5%,1/10W,TP,1608	1	SA
....4	R4035	2007-000070	R-CHIP;0ohm,5%,1/10W,TP,1608	1	SA
....4	R4051_32	2007-000070	R-CHIP;0ohm,5%,1/10W,TP,1608	1	SA
....4	R4086_EN	2007-000070	R-CHIP;0ohm,5%,1/10W,TP,1608	1	SA
....4	R4090	2007-000070	R-CHIP;0ohm,5%,1/10W,TP,1608	1	SA
....4	R5012	2007-000070	R-CHIP;0ohm,5%,1/10W,TP,1608	1	SA
....4	R5014	2007-000070	R-CHIP;0ohm,5%,1/10W,TP,1608	1	SA
....4	R5068	2007-000070	R-CHIP;0ohm,5%,1/10W,TP,1608	1	SA
....4	R5076	2007-000070	R-CHIP;0ohm,5%,1/10W,TP,1608	1	SA
....4	R5084	2007-000070	R-CHIP;0ohm,5%,1/10W,TP,1608	1	SA
....4	R5087	2007-000070	R-CHIP;0ohm,5%,1/10W,TP,1608	1	SA
....4	R5099	2007-000070	R-CHIP;0ohm,5%,1/10W,TP,1608	1	SA
....4	R5100	2007-000070	R-CHIP;0ohm,5%,1/10W,TP,1608	1	SA
....4	R5101	2007-000070	R-CHIP;0ohm,5%,1/10W,TP,1608	1	SA
....4	R5115	2007-000070	R-CHIP;0ohm,5%,1/10W,TP,1608	1	SA
....4	R5116	2007-000070	R-CHIP;0ohm,5%,1/10W,TP,1608	1	SA
....4	R5117	2007-000070	R-CHIP;0ohm,5%,1/10W,TP,1608	1	SA
....4	R5120	2007-000070	R-CHIP;0ohm,5%,1/10W,TP,1608	1	SA
....4	R1084	2007-000071	R-CHIP;22ohm,5%,1/10W,TP,1608	1	SA
....4	R1095	2007-000071	R-CHIP;22ohm,5%,1/10W,TP,1608	1	SA
....4	R2050	2007-000071	R-CHIP;22ohm,5%,1/10W,TP,1608	1	SA
....4	R2063	2007-000071	R-CHIP;22ohm,5%,1/10W,TP,1608	1	SA
....4	R2106	2007-000071	R-CHIP;22ohm,5%,1/10W,TP,1608	1	SA
....4	R2107	2007-000071	R-CHIP;22ohm,5%,1/10W,TP,1608	1	SA
....4	R2108	2007-000071	R-CHIP;22ohm,5%,1/10W,TP,1608	1	SA
....4	R2109	2007-000071	R-CHIP;22ohm,5%,1/10W,TP,1608	1	SA
....4	R2110	2007-000071	R-CHIP;22ohm,5%,1/10W,TP,1608	1	SA
....4	R2111	2007-000071	R-CHIP;22ohm,5%,1/10W,TP,1608	1	SA
....4	R2112	2007-000071	R-CHIP;22ohm,5%,1/10W,TP,1608	1	SA
....4	R2113	2007-000071	R-CHIP;22ohm,5%,1/10W,TP,1608	1	SA
....4	R4015	2007-000071	R-CHIP;22ohm,5%,1/10W,TP,1608	1	SA
....4	R4020	2007-000071	R-CHIP;22ohm,5%,1/10W,TP,1608	1	SA
....4	R4093	2007-000071	R-CHIP;22ohm,5%,1/10W,TP,1608	1	SA
....4	R5030	2007-000071	R-CHIP;22ohm,5%,1/10W,TP,1608	1	SA
....4	R5031	2007-000071	R-CHIP;22ohm,5%,1/10W,TP,1608	1	SA
....4	R5032	2007-000071	R-CHIP;22ohm,5%,1/10W,TP,1608	1	SA
....4	R5033	2007-000071	R-CHIP;22ohm,5%,1/10W,TP,1608	1	SA

ELECTRONIC SERVICE TIRGOVISTE

Level	Loc. No.	Code No.	Description & Specification	Q'ty	SA/SNA
....4	R5061	2007-000071	R-CHIP;22ohm,5%,1/10W,TP,1608	1	SA
....4	R5065	2007-000071	R-CHIP;22ohm,5%,1/10W,TP,1608	1	SA
....4	R5071	2007-000071	R-CHIP;22ohm,5%,1/10W,TP,1608	1	SA
....4	R5077	2007-000071	R-CHIP;22ohm,5%,1/10W,TP,1608	1	SA
....4	R5081	2007-000071	R-CHIP;22ohm,5%,1/10W,TP,1608	1	SA
....4	R5085	2007-000071	R-CHIP;22ohm,5%,1/10W,TP,1608	1	SA
....4	R5088	2007-000071	R-CHIP;22ohm,5%,1/10W,TP,1608	1	SA
....4	R5090	2007-000071	R-CHIP;22ohm,5%,1/10W,TP,1608	1	SA
....4	R5094	2007-000071	R-CHIP;22ohm,5%,1/10W,TP,1608	1	SA
....4	R5098	2007-000071	R-CHIP;22ohm,5%,1/10W,TP,1608	1	SA
....4	R5102	2007-000071	R-CHIP;22ohm,5%,1/10W,TP,1608	1	SA
....4	R5104	2007-000071	R-CHIP;22ohm,5%,1/10W,TP,1608	1	SA
....4	R5106	2007-000071	R-CHIP;22ohm,5%,1/10W,TP,1608	1	SA
....4	R5108	2007-000071	R-CHIP;22ohm,5%,1/10W,TP,1608	1	SA
....4	R1061	2007-000072	R-CHIP;47ohm,5%,1/10W,TP,1608	1	SA
....4	R1063	2007-000072	R-CHIP;47ohm,5%,1/10W,TP,1608	1	SA
....4	R2007	2007-000072	R-CHIP;47ohm,5%,1/10W,TP,1608	1	SA
....4	R2008	2007-000072	R-CHIP;47ohm,5%,1/10W,TP,1608	1	SA
....4	R2049	2007-000072	R-CHIP;47ohm,5%,1/10W,TP,1608	1	SA
....4	R2051	2007-000072	R-CHIP;47ohm,5%,1/10W,TP,1608	1	SA
....4	R4104	2007-000072	R-CHIP;47ohm,5%,1/10W,TP,1608	1	SA
....4	R4105	2007-000072	R-CHIP;47ohm,5%,1/10W,TP,1608	1	SA
....4	R4106	2007-000072	R-CHIP;47ohm,5%,1/10W,TP,1608	1	SA
....4	R4107	2007-000072	R-CHIP;47ohm,5%,1/10W,TP,1608	1	SA
....4	R4108	2007-000072	R-CHIP;47ohm,5%,1/10W,TP,1608	1	SA
....4	R4109	2007-000072	R-CHIP;47ohm,5%,1/10W,TP,1608	1	SA
....4	R4110	2007-000072	R-CHIP;47ohm,5%,1/10W,TP,1608	1	SA
....4	R4111	2007-000072	R-CHIP;47ohm,5%,1/10W,TP,1608	1	SA
....4	R4112	2007-000072	R-CHIP;47ohm,5%,1/10W,TP,1608	1	SA
....4	R4113	2007-000072	R-CHIP;47ohm,5%,1/10W,TP,1608	1	SA
....4	R5019	2007-000072	R-CHIP;47ohm,5%,1/10W,TP,1608	1	SA
....4	R5020	2007-000072	R-CHIP;47ohm,5%,1/10W,TP,1608	1	SA
....4	R5048	2007-000072	R-CHIP;47ohm,5%,1/10W,TP,1608	1	SA
....4	R5050	2007-000072	R-CHIP;47ohm,5%,1/10W,TP,1608	1	SA
....4	R1009	2007-000074	R-CHIP;100ohm,5%,1/10W,TP,1608	1	SA
....4	R1010	2007-000074	R-CHIP;100ohm,5%,1/10W,TP,1608	1	SA
....4	R1011	2007-000074	R-CHIP;100ohm,5%,1/10W,TP,1608	1	SA
....4	R1012	2007-000074	R-CHIP;100ohm,5%,1/10W,TP,1608	1	SA
....4	R1013	2007-000074	R-CHIP;100ohm,5%,1/10W,TP,1608	1	SA
....4	R1014	2007-000074	R-CHIP;100ohm,5%,1/10W,TP,1608	1	SA
....4	R1017	2007-000074	R-CHIP;100ohm,5%,1/10W,TP,1608	1	SA
....4	R1018	2007-000074	R-CHIP;100ohm,5%,1/10W,TP,1608	1	SA
....4	R1032	2007-000074	R-CHIP;100ohm,5%,1/10W,TP,1608	1	SA
....4	R1033	2007-000074	R-CHIP;100ohm,5%,1/10W,TP,1608	1	SA
....4	R1037	2007-000074	R-CHIP;100ohm,5%,1/10W,TP,1608	1	SA
....4	R1040	2007-000074	R-CHIP;100ohm,5%,1/10W,TP,1608	1	SA
....4	R1042	2007-000074	R-CHIP;100ohm,5%,1/10W,TP,1608	1	SA
....4	R1047	2007-000074	R-CHIP;100ohm,5%,1/10W,TP,1608	1	SA
....4	R1048	2007-000074	R-CHIP;100ohm,5%,1/10W,TP,1608	1	SA
....4	R1049	2007-000074	R-CHIP;100ohm,5%,1/10W,TP,1608	1	SA
....4	R1050	2007-000074	R-CHIP;100ohm,5%,1/10W,TP,1608	1	SA
....4	R1052	2007-000074	R-CHIP;100ohm,5%,1/10W,TP,1608	1	SA
....4	R1053	2007-000074	R-CHIP;100ohm,5%,1/10W,TP,1608	1	SA
....4	R1054	2007-000074	R-CHIP;100ohm,5%,1/10W,TP,1608	1	SA
....4	R1055	2007-000074	R-CHIP;100ohm,5%,1/10W,TP,1608	1	SA
....4	R1056	2007-000074	R-CHIP;100ohm,5%,1/10W,TP,1608	1	SA
....4	R1091	2007-000074	R-CHIP;100ohm,5%,1/10W,TP,1608	1	SA
....4	R1092	2007-000074	R-CHIP;100ohm,5%,1/10W,TP,1608	1	SA
....4	R1093	2007-000074	R-CHIP;100ohm,5%,1/10W,TP,1608	1	SA
....4	R2018	2007-000074	R-CHIP;100ohm,5%,1/10W,TP,1608	1	SA

ELECTRONIC SERVICE TIRGOVISTE

Level	Loc. No.	Code No.	Description & Specification	Q'ty	SA/SNA
....4	R2022	2007-000074	R-CHIP;100ohm,5%,1/10W,TP,1608	1	SA
....4	R2023	2007-000074	R-CHIP;100ohm,5%,1/10W,TP,1608	1	SA
....4	R2029	2007-000074	R-CHIP;100ohm,5%,1/10W,TP,1608	1	SA
....4	R2031	2007-000074	R-CHIP;100ohm,5%,1/10W,TP,1608	1	SA
....4	R2053	2007-000074	R-CHIP;100ohm,5%,1/10W,TP,1608	1	SA
....4	R2058	2007-000074	R-CHIP;100ohm,5%,1/10W,TP,1608	1	SA
....4	R2060	2007-000074	R-CHIP;100ohm,5%,1/10W,TP,1608	1	SA
....4	R2068	2007-000074	R-CHIP;100ohm,5%,1/10W,TP,1608	1	SA
....4	R2081	2007-000074	R-CHIP;100ohm,5%,1/10W,TP,1608	1	SA
....4	R2084	2007-000074	R-CHIP;100ohm,5%,1/10W,TP,1608	1	SA
....4	R2093	2007-000074	R-CHIP;100ohm,5%,1/10W,TP,1608	1	SA
....4	R3008	2007-000074	R-CHIP;100ohm,5%,1/10W,TP,1608	1	SA
....4	R3009	2007-000074	R-CHIP;100ohm,5%,1/10W,TP,1608	1	SA
....4	R3010	2007-000074	R-CHIP;100ohm,5%,1/10W,TP,1608	1	SA
....4	R3011	2007-000074	R-CHIP;100ohm,5%,1/10W,TP,1608	1	SA
....4	R3034	2007-000074	R-CHIP;100ohm,5%,1/10W,TP,1608	1	SA
....4	R3046	2007-000074	R-CHIP;100ohm,5%,1/10W,TP,1608	1	SA
....4	R3057	2007-000074	R-CHIP;100ohm,5%,1/10W,TP,1608	1	SA
....4	R3058	2007-000074	R-CHIP;100ohm,5%,1/10W,TP,1608	1	SA
....4	R3059	2007-000074	R-CHIP;100ohm,5%,1/10W,TP,1608	1	SA
....4	R3062	2007-000074	R-CHIP;100ohm,5%,1/10W,TP,1608	1	SA
....4	R3063	2007-000074	R-CHIP;100ohm,5%,1/10W,TP,1608	1	SA
....4	R3073	2007-000074	R-CHIP;100ohm,5%,1/10W,TP,1608	1	SA
....4	R3074	2007-000074	R-CHIP;100ohm,5%,1/10W,TP,1608	1	SA
....4	R3077	2007-000074	R-CHIP;100ohm,5%,1/10W,TP,1608	1	SA
....4	R3078	2007-000074	R-CHIP;100ohm,5%,1/10W,TP,1608	1	SA
....4	R3125	2007-000074	R-CHIP;100ohm,5%,1/10W,TP,1608	1	SA
....4	R3127	2007-000074	R-CHIP;100ohm,5%,1/10W,TP,1608	1	SA
....4	R3135	2007-000074	R-CHIP;100ohm,5%,1/10W,TP,1608	1	SA
....4	R4028	2007-000074	R-CHIP;100ohm,5%,1/10W,TP,1608	1	SA
....4	R4038	2007-000074	R-CHIP;100ohm,5%,1/10W,TP,1608	1	SA
....4	R4049	2007-000074	R-CHIP;100ohm,5%,1/10W,TP,1608	1	SA
....4	R4050	2007-000074	R-CHIP;100ohm,5%,1/10W,TP,1608	1	SA
....4	R4097	2007-000074	R-CHIP;100ohm,5%,1/10W,TP,1608	1	SA
....4	R4102	2007-000074	R-CHIP;100ohm,5%,1/10W,TP,1608	1	SA
....4	R4120	2007-000074	R-CHIP;100ohm,5%,1/10W,TP,1608	1	SA
....4	R5010	2007-000074	R-CHIP;100ohm,5%,1/10W,TP,1608	1	SA
....4	R5066	2007-000074	R-CHIP;100ohm,5%,1/10W,TP,1608	1	SA
....4	R5069	2007-000074	R-CHIP;100ohm,5%,1/10W,TP,1608	1	SA
....4	R2001	2007-000076	R-CHIP;330ohm,5%,1/10W,TP,1608	1	SA
....4	R2005	2007-000076	R-CHIP;330ohm,5%,1/10W,TP,1608	1	SA
....4	R2035	2007-000076	R-CHIP;330ohm,5%,1/10W,TP,1608	1	SA
....4	R2040	2007-000076	R-CHIP;330ohm,5%,1/10W,TP,1608	1	SA
....4	R1098	2007-000077	R-CHIP;470ohm,5%,1/10W,TP,1608	1	SA
....4	R2004	2007-000077	R-CHIP;470ohm,5%,1/10W,TP,1608	1	SA
....4	R2006	2007-000077	R-CHIP;470ohm,5%,1/10W,TP,1608	1	SA
....4	R2033	2007-000077	R-CHIP;470ohm,5%,1/10W,TP,1608	1	SA
....4	R2034	2007-000077	R-CHIP;470ohm,5%,1/10W,TP,1608	1	SA
....4	R2037	2007-000077	R-CHIP;470ohm,5%,1/10W,TP,1608	1	SA
....4	R2039	2007-000077	R-CHIP;470ohm,5%,1/10W,TP,1608	1	SA
....4	R2042	2007-000077	R-CHIP;470ohm,5%,1/10W,TP,1608	1	SA
....4	R2043	2007-000077	R-CHIP;470ohm,5%,1/10W,TP,1608	1	SA
....4	R2074	2007-000077	R-CHIP;470ohm,5%,1/10W,TP,1608	1	SA
....4	R2075	2007-000077	R-CHIP;470ohm,5%,1/10W,TP,1608	1	SA
....4	R2077	2007-000077	R-CHIP;470ohm,5%,1/10W,TP,1608	1	SA
....4	R2079	2007-000077	R-CHIP;470ohm,5%,1/10W,TP,1608	1	SA
....4	R3128	2007-000077	R-CHIP;470ohm,5%,1/10W,TP,1608	1	SA
....4	R3133	2007-000077	R-CHIP;470ohm,5%,1/10W,TP,1608	1	SA
....4	R4030	2007-000077	R-CHIP;470ohm,5%,1/10W,TP,1608	1	SA
....4	R4031	2007-000077	R-CHIP;470ohm,5%,1/10W,TP,1608	1	SA

ELECTRONIC SERVICE TIRGOVISTE

Level	Loc. No.	Code No.	Description & Specification	Q'ty	SA/SNA
....4	R4099	2007-000077	R-CHIP;470ohm,5%,1/10W,TP,1608	1	SA
....4	R5091	2007-000077	R-CHIP;470ohm,5%,1/10W,TP,1608	1	SA
....4	R5093	2007-000077	R-CHIP;470ohm,5%,1/10W,TP,1608	1	SA
....4	R1074	2007-000078	R-CHIP;1Kohm,5%,1/10W,TP,1608	1	SA
....4	R2009	2007-000078	R-CHIP;1Kohm,5%,1/10W,TP,1608	1	SA
....4	R2016	2007-000078	R-CHIP;1Kohm,5%,1/10W,TP,1608	1	SA
....4	R3001	2007-000078	R-CHIP;1Kohm,5%,1/10W,TP,1608	1	SA
....4	R3030	2007-000078	R-CHIP;1Kohm,5%,1/10W,TP,1608	1	SA
....4	R3121	2007-000078	R-CHIP;1Kohm,5%,1/10W,TP,1608	1	SA
....4	R3138	2007-000078	R-CHIP;1Kohm,5%,1/10W,TP,1608	1	SA
....4	R3139	2007-000078	R-CHIP;1Kohm,5%,1/10W,TP,1608	1	SA
....4	R4025	2007-000078	R-CHIP;1Kohm,5%,1/10W,TP,1608	1	SA
....4	R4026	2007-000078	R-CHIP;1Kohm,5%,1/10W,TP,1608	1	SA
....4	R4027	2007-000078	R-CHIP;1Kohm,5%,1/10W,TP,1608	1	SA
....4	R4034	2007-000078	R-CHIP;1Kohm,5%,1/10W,TP,1608	1	SA
....4	R4053	2007-000078	R-CHIP;1Kohm,5%,1/10W,TP,1608	1	SA
....4	R4096	2007-000078	R-CHIP;1Kohm,5%,1/10W,TP,1608	1	SA
....4	R4103	2007-000078	R-CHIP;1Kohm,5%,1/10W,TP,1608	1	SA
....4	R5043	2007-000078	R-CHIP;1Kohm,5%,1/10W,TP,1608	1	SA
....4	R3016	2007-000082	R-CHIP;3.3Kohm,5%,1/10W,TP,1608	1	SA
....4	R3017	2007-000082	R-CHIP;3.3Kohm,5%,1/10W,TP,1608	1	SA
....4	R3071	2007-000082	R-CHIP;3.3Kohm,5%,1/10W,TP,1608	1	SA
....4	R3072	2007-000082	R-CHIP;3.3Kohm,5%,1/10W,TP,1608	1	SA
....4	R4100	2007-000082	R-CHIP;3.3Kohm,5%,1/10W,TP,1608	1	SA
....4	R4101	2007-000082	R-CHIP;3.3Kohm,5%,1/10W,TP,1608	1	SA
....4	R1031	2007-000084	R-CHIP;4.7Kohm,5%,1/10W,TP,1608	1	SA
....4	R1035	2007-000084	R-CHIP;4.7Kohm,5%,1/10W,TP,1608	1	SA
....4	R1058	2007-000084	R-CHIP;4.7Kohm,5%,1/10W,TP,1608	1	SA
....4	R1060	2007-000084	R-CHIP;4.7Kohm,5%,1/10W,TP,1608	1	SA
....4	R1082	2007-000084	R-CHIP;4.7Kohm,5%,1/10W,TP,1608	1	SA
....4	R3002	2007-000084	R-CHIP;4.7Kohm,5%,1/10W,TP,1608	1	SA
....4	R3014	2007-000084	R-CHIP;4.7Kohm,5%,1/10W,TP,1608	1	SA
....4	R3015	2007-000084	R-CHIP;4.7Kohm,5%,1/10W,TP,1608	1	SA
....4	R3018	2007-000084	R-CHIP;4.7Kohm,5%,1/10W,TP,1608	1	SA
....4	R3020	2007-000084	R-CHIP;4.7Kohm,5%,1/10W,TP,1608	1	SA
....4	R3021	2007-000084	R-CHIP;4.7Kohm,5%,1/10W,TP,1608	1	SA
....4	R3022	2007-000084	R-CHIP;4.7Kohm,5%,1/10W,TP,1608	1	SA
....4	R3036	2007-000084	R-CHIP;4.7Kohm,5%,1/10W,TP,1608	1	SA
....4	R3038	2007-000084	R-CHIP;4.7Kohm,5%,1/10W,TP,1608	1	SA
....4	R3070	2007-000084	R-CHIP;4.7Kohm,5%,1/10W,TP,1608	1	SA
....4	R3079	2007-000084	R-CHIP;4.7Kohm,5%,1/10W,TP,1608	1	SA
....4	R3080	2007-000084	R-CHIP;4.7Kohm,5%,1/10W,TP,1608	1	SA
....4	R3081	2007-000084	R-CHIP;4.7Kohm,5%,1/10W,TP,1608	1	SA
....4	R3082	2007-000084	R-CHIP;4.7Kohm,5%,1/10W,TP,1608	1	SA
....4	R3086	2007-000084	R-CHIP;4.7Kohm,5%,1/10W,TP,1608	1	SA
....4	R3087	2007-000084	R-CHIP;4.7Kohm,5%,1/10W,TP,1608	1	SA
....4	R3108	2007-000084	R-CHIP;4.7Kohm,5%,1/10W,TP,1608	1	SA
....4	R3109	2007-000084	R-CHIP;4.7Kohm,5%,1/10W,TP,1608	1	SA
....4	R3110	2007-000084	R-CHIP;4.7Kohm,5%,1/10W,TP,1608	1	SA
....4	R3111	2007-000084	R-CHIP;4.7Kohm,5%,1/10W,TP,1608	1	SA
....4	R3112	2007-000084	R-CHIP;4.7Kohm,5%,1/10W,TP,1608	1	SA
....4	R3113	2007-000084	R-CHIP;4.7Kohm,5%,1/10W,TP,1608	1	SA
....4	R3114	2007-000084	R-CHIP;4.7Kohm,5%,1/10W,TP,1608	1	SA
....4	R3116	2007-000084	R-CHIP;4.7Kohm,5%,1/10W,TP,1608	1	SA
....4	R3129	2007-000084	R-CHIP;4.7Kohm,5%,1/10W,TP,1608	1	SA
....4	R3134	2007-000084	R-CHIP;4.7Kohm,5%,1/10W,TP,1608	1	SA
....4	R3137	2007-000084	R-CHIP;4.7Kohm,5%,1/10W,TP,1608	1	SA
....4	R4036	2007-000084	R-CHIP;4.7Kohm,5%,1/10W,TP,1608	1	SA
....4	R4037	2007-000084	R-CHIP;4.7Kohm,5%,1/10W,TP,1608	1	SA
....4	R4098	2007-000084	R-CHIP;4.7Kohm,5%,1/10W,TP,1608	1	SA

ELECTRONIC SERVICE TIRGOVISTE

Level	Loc. No.	Code No.	Description & Specification	Q'ty	SA/SNA
....4	R4123	2007-000084	R-CHIP;4.7Kohm,5%,1/10W,TP,1608	1	SA
....4	R5064	2007-000084	R-CHIP;4.7Kohm,5%,1/10W,TP,1608	1	SA
....4	R5119	2007-000084	R-CHIP;4.7Kohm,5%,1/10W,TP,1608	1	SA
....4	R2028	2007-000087	R-CHIP;6.8Kohm,5%,1/10W,TP,1608	1	SA
....4	R2061	2007-000087	R-CHIP;6.8Kohm,5%,1/10W,TP,1608	1	SA
....4	R1015	2007-000090	R-CHIP;10Kohm,5%,1/10W,TP,1608	1	SA
....4	R1016	2007-000090	R-CHIP;10Kohm,5%,1/10W,TP,1608	1	SA
....4	R1038	2007-000090	R-CHIP;10Kohm,5%,1/10W,TP,1608	1	SA
....4	R1039	2007-000090	R-CHIP;10Kohm,5%,1/10W,TP,1608	1	SA
....4	R1041	2007-000090	R-CHIP;10Kohm,5%,1/10W,TP,1608	1	SA
....4	R1051	2007-000090	R-CHIP;10Kohm,5%,1/10W,TP,1608	1	SA
....4	R1067	2007-000090	R-CHIP;10Kohm,5%,1/10W,TP,1608	1	SA
....4	R1080	2007-000090	R-CHIP;10Kohm,5%,1/10W,TP,1608	1	SA
....4	R1101	2007-000090	R-CHIP;10Kohm,5%,1/10W,TP,1608	1	SA
....4	R1102	2007-000090	R-CHIP;10Kohm,5%,1/10W,TP,1608	1	SA
....4	R1103	2007-000090	R-CHIP;10Kohm,5%,1/10W,TP,1608	1	SA
....4	R1104	2007-000090	R-CHIP;10Kohm,5%,1/10W,TP,1608	1	SA
....4	R1105	2007-000090	R-CHIP;10Kohm,5%,1/10W,TP,1608	1	SA
....4	R2002	2007-000090	R-CHIP;10Kohm,5%,1/10W,TP,1608	1	SA
....4	R2003	2007-000090	R-CHIP;10Kohm,5%,1/10W,TP,1608	1	SA
....4	R2013	2007-000090	R-CHIP;10Kohm,5%,1/10W,TP,1608	1	SA
....4	R2044	2007-000090	R-CHIP;10Kohm,5%,1/10W,TP,1608	1	SA
....4	R2045	2007-000090	R-CHIP;10Kohm,5%,1/10W,TP,1608	1	SA
....4	R2057	2007-000090	R-CHIP;10Kohm,5%,1/10W,TP,1608	1	SA
....4	R2065	2007-000090	R-CHIP;10Kohm,5%,1/10W,TP,1608	1	SA
....4	R3005	2007-000090	R-CHIP;10Kohm,5%,1/10W,TP,1608	1	SA
....4	R3006	2007-000090	R-CHIP;10Kohm,5%,1/10W,TP,1608	1	SA
....4	R3007	2007-000090	R-CHIP;10Kohm,5%,1/10W,TP,1608	1	SA
....4	R3075	2007-000090	R-CHIP;10Kohm,5%,1/10W,TP,1608	1	SA
....4	R3076	2007-000090	R-CHIP;10Kohm,5%,1/10W,TP,1608	1	SA
....4	R3083	2007-000090	R-CHIP;10Kohm,5%,1/10W,TP,1608	1	SA
....4	R3084	2007-000090	R-CHIP;10Kohm,5%,1/10W,TP,1608	1	SA
....4	R3085	2007-000090	R-CHIP;10Kohm,5%,1/10W,TP,1608	1	SA
....4	R3131	2007-000090	R-CHIP;10Kohm,5%,1/10W,TP,1608	1	SA
....4	R3140	2007-000090	R-CHIP;10Kohm,5%,1/10W,TP,1608	1	SA
....4	R4118	2007-000090	R-CHIP;10Kohm,5%,1/10W,TP,1608	1	SA
....4	R4119	2007-000090	R-CHIP;10Kohm,5%,1/10W,TP,1608	1	SA
....4	R5004	2007-000090	R-CHIP;10Kohm,5%,1/10W,TP,1608	1	SA
....4	R5044	2007-000090	R-CHIP;10Kohm,5%,1/10W,TP,1608	1	SA
....4	R1070	2007-000093	R-CHIP;20Kohm,5%,1/10W,TP,1608	1	SA
....4	R1071	2007-000093	R-CHIP;20Kohm,5%,1/10W,TP,1608	1	SA
....4	R3004	2007-000094	R-CHIP;22Kohm,5%,1/10W,TP,1608	1	SA
....4	R1062	2007-000097	R-CHIP;47Kohm,5%,1/10W,TP,1608	1	SA
....4	R1068	2007-000097	R-CHIP;47Kohm,5%,1/10W,TP,1608	1	SA
....4	R1075	2007-000097	R-CHIP;47Kohm,5%,1/10W,TP,1608	1	SA
....4	R1079	2007-000097	R-CHIP;47Kohm,5%,1/10W,TP,1608	1	SA
....4	R2010	2007-000097	R-CHIP;47Kohm,5%,1/10W,TP,1608	1	SA
....4	R2011	2007-000097	R-CHIP;47Kohm,5%,1/10W,TP,1608	1	SA
....4	R2012	2007-000097	R-CHIP;47Kohm,5%,1/10W,TP,1608	1	SA
....4	R3099	2007-000097	R-CHIP;47Kohm,5%,1/10W,TP,1608	1	SA
....4	R1001	2007-000100	R-CHIP;68Kohm,5%,1/10W,TP,1608	1	SA
....4	R1002	2007-000100	R-CHIP;68Kohm,5%,1/10W,TP,1608	1	SA
....4	R1003	2007-000100	R-CHIP;68Kohm,5%,1/10W,TP,1608	1	SA
....4	R1004	2007-000100	R-CHIP;68Kohm,5%,1/10W,TP,1608	1	SA
....4	R1005	2007-000100	R-CHIP;68Kohm,5%,1/10W,TP,1608	1	SA
....4	R1006	2007-000100	R-CHIP;68Kohm,5%,1/10W,TP,1608	1	SA
....4	R1007	2007-000100	R-CHIP;68Kohm,5%,1/10W,TP,1608	1	SA
....4	R1008	2007-000100	R-CHIP;68Kohm,5%,1/10W,TP,1608	1	SA
....4	R1019	2007-000100	R-CHIP;68Kohm,5%,1/10W,TP,1608	1	SA
....4	R1020	2007-000100	R-CHIP;68Kohm,5%,1/10W,TP,1608	1	SA

ELECTRONIC SERVICE TIRGOVISTE

Level	Loc. No.	Code No.	Description & Specification	Q'ty	SA/SNA
....4	R1021	2007-000100	R-CHIP;68Kohm,5%,1/10W,TP,1608	1	SA
....4	R1022	2007-000100	R-CHIP;68Kohm,5%,1/10W,TP,1608	1	SA
....4	R1023	2007-000100	R-CHIP;68Kohm,5%,1/10W,TP,1608	1	SA
....4	R1024	2007-000100	R-CHIP;68Kohm,5%,1/10W,TP,1608	1	SA
....4	R1025	2007-000100	R-CHIP;68Kohm,5%,1/10W,TP,1608	1	SA
....4	R1026	2007-000100	R-CHIP;68Kohm,5%,1/10W,TP,1608	1	SA
....4	R1027	2007-000100	R-CHIP;68Kohm,5%,1/10W,TP,1608	1	SA
....4	R1028	2007-000100	R-CHIP;68Kohm,5%,1/10W,TP,1608	1	SA
....4	R1029	2007-000100	R-CHIP;68Kohm,5%,1/10W,TP,1608	1	SA
....4	R1030	2007-000100	R-CHIP;68Kohm,5%,1/10W,TP,1608	1	SA
....4	R1043	2007-000100	R-CHIP;68Kohm,5%,1/10W,TP,1608	1	SA
....4	R1044	2007-000100	R-CHIP;68Kohm,5%,1/10W,TP,1608	1	SA
....4	R1045	2007-000100	R-CHIP;68Kohm,5%,1/10W,TP,1608	1	SA
....4	R1046	2007-000100	R-CHIP;68Kohm,5%,1/10W,TP,1608	1	SA
....4	R1034	2007-000102	R-CHIP;100Kohm,5%,1/10W,TP,1608	1	SA
....4	R1064	2007-000102	R-CHIP;100Kohm,5%,1/10W,TP,1608	1	SA
....4	R1065	2007-000102	R-CHIP;100Kohm,5%,1/10W,TP,1608	1	SA
....4	R1069	2007-000102	R-CHIP;100Kohm,5%,1/10W,TP,1608	1	SA
....4	R1072	2007-000102	R-CHIP;100Kohm,5%,1/10W,TP,1608	1	SA
....4	R1073	2007-000107	R-CHIP;470Kohm,5%,1/10W,TP,1608	1	SA
....4	R4021	2007-000113	R-CHIP;33ohm,5%,1/10W,TP,1608	1	SA
....4	R4022	2007-000113	R-CHIP;33ohm,5%,1/10W,TP,1608	1	SA
....4	R4023	2007-000113	R-CHIP;33ohm,5%,1/10W,TP,1608	1	SA
....4	R4024	2007-000113	R-CHIP;33ohm,5%,1/10W,TP,1608	1	SA
....4	R1036	2007-000119	R-CHIP;560ohm,5%,1/10W,TP,1608	1	SA
....4	R1078	2007-000122	R-CHIP;1.2Kohm,5%,1/10W,TP,1608	1	SA
....4	R5053	2007-000123	R-CHIP;1.5Kohm,5%,1/10W,TP,1608	1	SA
....4	R5054	2007-000123	R-CHIP;1.5Kohm,5%,1/10W,TP,1608	1	SA
....4	R5055	2007-000123	R-CHIP;1.5Kohm,5%,1/10W,TP,1608	1	SA
....4	R1096	2007-000125	R-CHIP;3.9Kohm,5%,1/10W,TP,1608	1	SA
....4	R1076	2007-000129	R-CHIP;27Kohm,5%,1/10W,TP,1608	1	SA
....4	R5015	2007-000133	R-CHIP;330Kohm,5%,1/10W,TP,1608	1	SA
....4	R2098	2007-000309	R-CHIP;10ohm,5%,1/10W,TP,1608	1	SA
....4	R2099	2007-000309	R-CHIP;10ohm,5%,1/10W,TP,1608	1	SA
....4	R2100	2007-000309	R-CHIP;10ohm,5%,1/10W,TP,1608	1	SA
....4	R2101	2007-000309	R-CHIP;10ohm,5%,1/10W,TP,1608	1	SA
....4	R2102	2007-000309	R-CHIP;10ohm,5%,1/10W,TP,1608	1	SA
....4	R2103	2007-000309	R-CHIP;10ohm,5%,1/10W,TP,1608	1	SA
....4	R2104	2007-000309	R-CHIP;10ohm,5%,1/10W,TP,1608	1	SA
....4	R2105	2007-000309	R-CHIP;10ohm,5%,1/10W,TP,1608	1	SA
....4	R3044	2007-000309	R-CHIP;10ohm,5%,1/10W,TP,1608	1	SA
....4	R3048	2007-000309	R-CHIP;10ohm,5%,1/10W,TP,1608	1	SA
....4	R3049_1M	2007-000309	R-CHIP;10ohm,5%,1/10W,TP,1608	1	SA
....4	R3050_1M	2007-000309	R-CHIP;10ohm,5%,1/10W,TP,1608	1	SA
....4	R3056	2007-000309	R-CHIP;10ohm,5%,1/10W,TP,1608	1	SA
....4	R3060	2007-000309	R-CHIP;10ohm,5%,1/10W,TP,1608	1	SA
....4	R3061	2007-000309	R-CHIP;10ohm,5%,1/10W,TP,1608	1	SA
....4	R3064	2007-000309	R-CHIP;10ohm,5%,1/10W,TP,1608	1	SA
....4	R3066	2007-000309	R-CHIP;10ohm,5%,1/10W,TP,1608	1	SA
....4	R3067	2007-000309	R-CHIP;10ohm,5%,1/10W,TP,1608	1	SA
....4	R3068	2007-000309	R-CHIP;10ohm,5%,1/10W,TP,1608	1	SA
....4	R3069	2007-000309	R-CHIP;10ohm,5%,1/10W,TP,1608	1	SA
....4	R3091	2007-000309	R-CHIP;10ohm,5%,1/10W,TP,1608	1	SA
....4	R3092	2007-000309	R-CHIP;10ohm,5%,1/10W,TP,1608	1	SA
....4	R3093	2007-000309	R-CHIP;10ohm,5%,1/10W,TP,1608	1	SA
....4	R3094	2007-000309	R-CHIP;10ohm,5%,1/10W,TP,1608	1	SA
....4	R3095	2007-000309	R-CHIP;10ohm,5%,1/10W,TP,1608	1	SA
....4	R3096	2007-000309	R-CHIP;10ohm,5%,1/10W,TP,1608	1	SA
....4	R3097	2007-000309	R-CHIP;10ohm,5%,1/10W,TP,1608	1	SA
....4	R3098	2007-000309	R-CHIP;10ohm,5%,1/10W,TP,1608	1	SA

ELECTRONIC SERVICE TIRGOVISTE

Level	Loc. No.	Code No.	Description & Specification	Q'ty	SA/SNA
....4	R5045	2007-000309	R-CHIP;10ohm,5%,1/10W,TP,1608	1	SA
....4	R5046	2007-000309	R-CHIP;10ohm,5%,1/10W,TP,1608	1	SA
....4	R5047	2007-000309	R-CHIP;10ohm,5%,1/10W,TP,1608	1	SA
....4	R2017	2007-000458	R-CHIP;18Kohm,5%,1/10W,TP,1608	1	SA
....4	R2052	2007-000458	R-CHIP;18Kohm,5%,1/10W,TP,1608	1	SA
....4	R3012	2007-000704	R-CHIP;3.6Kohm,5%,1/10W,TP,1608	1	SA
....4	R3013	2007-000704	R-CHIP;3.6Kohm,5%,1/10W,TP,1608	1	SA
....4	R1077	2007-000708	R-CHIP;3.9Kohm,1%,1/10W,TP,1608	1	SA
....4	R2019	2007-000950	R-CHIP;47ohm,5%,1/4W,TP,3216	1	SA
....4	R2020	2007-000950	R-CHIP;47ohm,5%,1/4W,TP,3216	1	SA
....4	R2021	2007-000950	R-CHIP;47ohm,5%,1/4W,TP,3216	1	SA
....4	R2066	2007-000950	R-CHIP;47ohm,5%,1/4W,TP,3216	1	SA
....4	R2067	2007-000950	R-CHIP;47ohm,5%,1/4W,TP,3216	1	SA
....4	R2076	2007-000950	R-CHIP;47ohm,5%,1/4W,TP,3216	1	SA
....4	R2078	2007-000950	R-CHIP;47ohm,5%,1/4W,TP,3216	1	SA
....4	R2082	2007-000950	R-CHIP;47ohm,5%,1/4W,TP,3216	1	SA
....4	R2083	2007-000950	R-CHIP;47ohm,5%,1/4W,TP,3216	1	SA
....4	R2094	2007-000950	R-CHIP;47ohm,5%,1/4W,TP,3216	1	SA
....4	R2095	2007-000950	R-CHIP;47ohm,5%,1/4W,TP,3216	1	SA
....4	R5035	2007-001014	R-CHIP;51OHM,5%,1/10W,TP,1608	1	SA
....4	R5039	2007-001014	R-CHIP;51OHM,5%,1/10W,TP,1608	1	SA
....4	R2014	2007-001164	R-CHIP;75ohm,1%,1/10W,TP,1608	1	SA
....4	R2015	2007-001164	R-CHIP;75ohm,1%,1/10W,TP,1608	1	SA
....4	R2025	2007-001164	R-CHIP;75ohm,1%,1/10W,TP,1608	1	SA
....4	R2026	2007-001164	R-CHIP;75ohm,1%,1/10W,TP,1608	1	SA
....4	R2027	2007-001164	R-CHIP;75ohm,1%,1/10W,TP,1608	1	SA
....4	R2032	2007-001164	R-CHIP;75ohm,1%,1/10W,TP,1608	1	SA
....4	R2062	2007-001164	R-CHIP;75ohm,1%,1/10W,TP,1608	1	SA
....4	R2085	2007-001164	R-CHIP;75ohm,1%,1/10W,TP,1608	1	SA
....4	R2086	2007-001164	R-CHIP;75ohm,1%,1/10W,TP,1608	1	SA
....4	R2087	2007-001164	R-CHIP;75ohm,1%,1/10W,TP,1608	1	SA
....4	R2036	2007-001167	R-CHIP;75ohm,5%,1/10W,TP,1608	1	SA
....4	R2038	2007-001167	R-CHIP;75ohm,5%,1/10W,TP,1608	1	SA
....4	R2041	2007-001167	R-CHIP;75ohm,5%,1/10W,TP,1608	1	SA
....4	R2046	2007-001167	R-CHIP;75ohm,5%,1/10W,TP,1608	1	SA
....4	R2047	2007-001167	R-CHIP;75ohm,5%,1/10W,TP,1608	1	SA
....4	R2048	2007-001167	R-CHIP;75ohm,5%,1/10W,TP,1608	1	SA
....4	R2054	2007-001167	R-CHIP;75ohm,5%,1/10W,TP,1608	1	SA
....4	R2059	2007-001167	R-CHIP;75ohm,5%,1/10W,TP,1608	1	SA
....4	R5016	2007-001167	R-CHIP;75ohm,5%,1/10W,TP,1608	1	SA
....4	R1083	2007-008720	R-CHIP;4.7ohm,1%,1/4W,TP,3216	1	SA
....4	R1088	2007-008720	R-CHIP;4.7ohm,1%,1/4W,TP,3216	1	SA
....4	R1094	2007-008720	R-CHIP;4.7ohm,1%,1/4W,TP,3216	1	SA
....4	R1097	2007-008720	R-CHIP;4.7ohm,1%,1/4W,TP,3216	1	SA
....4	RA5001	2011-000585	R-NET;47ohm,5%,1/16W,L,CHIP,8P,TP,3.2x1.	1	SA
....4	RA5002	2011-000585	R-NET;47ohm,5%,1/16W,L,CHIP,8P,TP,3.2x1.	1	SA
....4	RA5003	2011-000585	R-NET;47ohm,5%,1/16W,L,CHIP,8P,TP,3.2x1.	1	SA
....4	RA5004	2011-000585	R-NET;47ohm,5%,1/16W,L,CHIP,8P,TP,3.2x1.	1	SA
....4	RA5005	2011-000585	R-NET;47ohm,5%,1/16W,L,CHIP,8P,TP,3.2x1.	1	SA
....4	RA5006	2011-000585	R-NET;47ohm,5%,1/16W,L,CHIP,8P,TP,3.2x1.	1	SA
....4	RA5007	2011-000585	R-NET;47ohm,5%,1/16W,L,CHIP,8P,TP,3.2x1.	1	SA
....4	RA5010	2011-000585	R-NET;47ohm,5%,1/16W,L,CHIP,8P,TP,3.2x1.	1	SA
....4	RA3004	2011-000651	R-NET;10ohm,5%,1/16W,L,CHIP,8P,TP,3216	1	SA
....4	RA3005	2011-000651	R-NET;10ohm,5%,1/16W,L,CHIP,8P,TP,3216	1	SA
....4	RA3007	2011-000651	R-NET;10ohm,5%,1/16W,L,CHIP,8P,TP,3216	1	SA
....4	RA3008	2011-000651	R-NET;10ohm,5%,1/16W,L,CHIP,8P,TP,3216	1	SA
....4	RA3009	2011-000651	R-NET;10ohm,5%,1/16W,L,CHIP,8P,TP,3216	1	SA
....4	RA3011	2011-000651	R-NET;10ohm,5%,1/16W,L,CHIP,8P,TP,3216	1	SA
....4	RA3001	2011-001093	R-NET;100OHM,5%,1/16W,L,CHIP,8P,TP,3216	1	SA
....4	RA3002	2011-001093	R-NET;100OHM,5%,1/16W,L,CHIP,8P,TP,3216	1	SA

ELECTRONIC SERVICE TIRGOVISTE

Level	Loc. No.	Code No.	Description & Specification	Q'ty	SA/SNA
....4	RA3003	2011-001093	R-NET;100OHM,5%,1/16W,L,CHIP,8P,TP,3216	1	SA
....4	RA3006	2011-001093	R-NET;100OHM,5%,1/16W,L,CHIP,8P,TP,3216	1	SA
....4	RA3010	2011-001093	R-NET;100OHM,5%,1/16W,L,CHIP,8P,TP,3216	1	SA
....4	RA3012	2011-001093	R-NET;100OHM,5%,1/16W,L,CHIP,8P,TP,3216	1	SA
....4	RA3013	2011-001093	R-NET;100OHM,5%,1/16W,L,CHIP,8P,TP,3216	1	SA
....4	RA3014	2011-001093	R-NET;100OHM,5%,1/16W,L,CHIP,8P,TP,3216	1	SA
....4	RA3015	2011-001093	R-NET;100OHM,5%,1/16W,L,CHIP,8P,TP,3216	1	SA
....4	RA3016	2011-001093	R-NET;100OHM,5%,1/16W,L,CHIP,8P,TP,3216	1	SA
....4	RA3017	2011-001093	R-NET;100OHM,5%,1/16W,L,CHIP,8P,TP,3216	1	SA
....4	RA3018	2011-001093	R-NET;100OHM,5%,1/16W,L,CHIP,8P,TP,3216	1	SA
....4	RA3019	2011-001093	R-NET;100OHM,5%,1/16W,L,CHIP,8P,TP,3216	1	SA
....4	RA3020	2011-001093	R-NET;100OHM,5%,1/16W,L,CHIP,8P,TP,3216	1	SA
....4	RA4001	2011-001093	R-NET;100OHM,5%,1/16W,L,CHIP,8P,TP,3216	1	SA
....4	RA4002	2011-001093	R-NET;100OHM,5%,1/16W,L,CHIP,8P,TP,3216	1	SA
....4	C1158	2203-000125	C-CER,CHIP;1.2nF,10%,50V,X7R,TP,1608,-	1	SA
....4	C1037	2203-000140	C-CER,CHIP;1.5nF,10%,50V,X7R,1608	1	SA
....4	C1062	2203-000140	C-CER,CHIP;1.5nF,10%,50V,X7R,1608	1	SA
....4	C1004	2203-000189	C-CER,CHIP;100nF,+80-20%,25V,Y5V,1608	1	SA
....4	C1006	2203-000189	C-CER,CHIP;100nF,+80-20%,25V,Y5V,1608	1	SA
....4	C1008	2203-000189	C-CER,CHIP;100nF,+80-20%,25V,Y5V,1608	1	SA
....4	C1016	2203-000189	C-CER,CHIP;100nF,+80-20%,25V,Y5V,1608	1	SA
....4	C1021	2203-000189	C-CER,CHIP;100nF,+80-20%,25V,Y5V,1608	1	SA
....4	C1025	2203-000189	C-CER,CHIP;100nF,+80-20%,25V,Y5V,1608	1	SA
....4	C1027	2203-000189	C-CER,CHIP;100nF,+80-20%,25V,Y5V,1608	1	SA
....4	C1043	2203-000189	C-CER,CHIP;100nF,+80-20%,25V,Y5V,1608	1	SA
....4	C1046	2203-000189	C-CER,CHIP;100nF,+80-20%,25V,Y5V,1608	1	SA
....4	C1052	2203-000189	C-CER,CHIP;100nF,+80-20%,25V,Y5V,1608	1	SA
....4	C1053	2203-000189	C-CER,CHIP;100nF,+80-20%,25V,Y5V,1608	1	SA
....4	C1054	2203-000189	C-CER,CHIP;100nF,+80-20%,25V,Y5V,1608	1	SA
....4	C1055	2203-000189	C-CER,CHIP;100nF,+80-20%,25V,Y5V,1608	1	SA
....4	C1075	2203-000189	C-CER,CHIP;100nF,+80-20%,25V,Y5V,1608	1	SA
....4	C1084	2203-000189	C-CER,CHIP;100nF,+80-20%,25V,Y5V,1608	1	SA
....4	C1086	2203-000189	C-CER,CHIP;100nF,+80-20%,25V,Y5V,1608	1	SA
....4	C1087	2203-000189	C-CER,CHIP;100nF,+80-20%,25V,Y5V,1608	1	SA
....4	C1097	2203-000189	C-CER,CHIP;100nF,+80-20%,25V,Y5V,1608	1	SA
....4	C1098	2203-000189	C-CER,CHIP;100nF,+80-20%,25V,Y5V,1608	1	SA
....4	C1103	2203-000189	C-CER,CHIP;100nF,+80-20%,25V,Y5V,1608	1	SA
....4	C1105	2203-000189	C-CER,CHIP;100nF,+80-20%,25V,Y5V,1608	1	SA
....4	C1109	2203-000189	C-CER,CHIP;100nF,+80-20%,25V,Y5V,1608	1	SA
....4	C1124	2203-000189	C-CER,CHIP;100nF,+80-20%,25V,Y5V,1608	1	SA
....4	C1132	2203-000189	C-CER,CHIP;100nF,+80-20%,25V,Y5V,1608	1	SA
....4	C1133	2203-000189	C-CER,CHIP;100nF,+80-20%,25V,Y5V,1608	1	SA
....4	C1141	2203-000189	C-CER,CHIP;100nF,+80-20%,25V,Y5V,1608	1	SA
....4	C1159	2203-000189	C-CER,CHIP;100nF,+80-20%,25V,Y5V,1608	1	SA
....4	C1168	2203-000189	C-CER,CHIP;100nF,+80-20%,25V,Y5V,1608	1	SA
....4	C2002	2203-000189	C-CER,CHIP;100nF,+80-20%,25V,Y5V,1608	1	SA
....4	C2018	2203-000189	C-CER,CHIP;100nF,+80-20%,25V,Y5V,1608	1	SA
....4	C3001	2203-000189	C-CER,CHIP;100nF,+80-20%,25V,Y5V,1608	1	SA
....4	C3005	2203-000189	C-CER,CHIP;100nF,+80-20%,25V,Y5V,1608	1	SA
....4	C3034	2203-000189	C-CER,CHIP;100nF,+80-20%,25V,Y5V,1608	1	SA
....4	C4016	2203-000189	C-CER,CHIP;100nF,+80-20%,25V,Y5V,1608	1	SA
....4	C4017	2203-000189	C-CER,CHIP;100nF,+80-20%,25V,Y5V,1608	1	SA
....4	C4018	2203-000189	C-CER,CHIP;100nF,+80-20%,25V,Y5V,1608	1	SA
....4	C4019	2203-000189	C-CER,CHIP;100nF,+80-20%,25V,Y5V,1608	1	SA
....4	C4020	2203-000189	C-CER,CHIP;100nF,+80-20%,25V,Y5V,1608	1	SA
....4	C4021	2203-000189	C-CER,CHIP;100nF,+80-20%,25V,Y5V,1608	1	SA
....4	C4022	2203-000189	C-CER,CHIP;100nF,+80-20%,25V,Y5V,1608	1	SA
....4	C4025	2203-000189	C-CER,CHIP;100nF,+80-20%,25V,Y5V,1608	1	SA
....4	C4026	2203-000189	C-CER,CHIP;100nF,+80-20%,25V,Y5V,1608	1	SA
....4	C4027	2203-000189	C-CER,CHIP;100nF,+80-20%,25V,Y5V,1608	1	SA

ELECTRONIC SERVICE TIRGOVISTE

Level	Loc. No.	Code No.	Description & Specification	Q'ty	SA/SNA
....4	C4028	2203-000189	C-CER,CHIP;100nF,+80-20%,25V,Y5V,1608	1	SA
....4	C4029	2203-000189	C-CER,CHIP;100nF,+80-20%,25V,Y5V,1608	1	SA
....4	C4031	2203-000189	C-CER,CHIP;100nF,+80-20%,25V,Y5V,1608	1	SA
....4	C4032	2203-000189	C-CER,CHIP;100nF,+80-20%,25V,Y5V,1608	1	SA
....4	C4034	2203-000189	C-CER,CHIP;100nF,+80-20%,25V,Y5V,1608	1	SA
....4	C4035	2203-000189	C-CER,CHIP;100nF,+80-20%,25V,Y5V,1608	1	SA
....4	C4036	2203-000189	C-CER,CHIP;100nF,+80-20%,25V,Y5V,1608	1	SA
....4	C4038	2203-000189	C-CER,CHIP;100nF,+80-20%,25V,Y5V,1608	1	SA
....4	C4039	2203-000189	C-CER,CHIP;100nF,+80-20%,25V,Y5V,1608	1	SA
....4	C4040	2203-000189	C-CER,CHIP;100nF,+80-20%,25V,Y5V,1608	1	SA
....4	C4041	2203-000189	C-CER,CHIP;100nF,+80-20%,25V,Y5V,1608	1	SA
....4	C4042	2203-000189	C-CER,CHIP;100nF,+80-20%,25V,Y5V,1608	1	SA
....4	C4043	2203-000189	C-CER,CHIP;100nF,+80-20%,25V,Y5V,1608	1	SA
....4	C4045	2203-000189	C-CER,CHIP;100nF,+80-20%,25V,Y5V,1608	1	SA
....4	C4046	2203-000189	C-CER,CHIP;100nF,+80-20%,25V,Y5V,1608	1	SA
....4	C4048	2203-000189	C-CER,CHIP;100nF,+80-20%,25V,Y5V,1608	1	SA
....4	C4049	2203-000189	C-CER,CHIP;100nF,+80-20%,25V,Y5V,1608	1	SA
....4	C4052	2203-000189	C-CER,CHIP;100nF,+80-20%,25V,Y5V,1608	1	SA
....4	C4053	2203-000189	C-CER,CHIP;100nF,+80-20%,25V,Y5V,1608	1	SA
....4	C4054	2203-000189	C-CER,CHIP;100nF,+80-20%,25V,Y5V,1608	1	SA
....4	C4055	2203-000189	C-CER,CHIP;100nF,+80-20%,25V,Y5V,1608	1	SA
....4	C4056	2203-000189	C-CER,CHIP;100nF,+80-20%,25V,Y5V,1608	1	SA
....4	C4059	2203-000189	C-CER,CHIP;100nF,+80-20%,25V,Y5V,1608	1	SA
....4	C4060	2203-000189	C-CER,CHIP;100nF,+80-20%,25V,Y5V,1608	1	SA
....4	C4061	2203-000189	C-CER,CHIP;100nF,+80-20%,25V,Y5V,1608	1	SA
....4	C4062	2203-000189	C-CER,CHIP;100nF,+80-20%,25V,Y5V,1608	1	SA
....4	C4063	2203-000189	C-CER,CHIP;100nF,+80-20%,25V,Y5V,1608	1	SA
....4	C4067	2203-000189	C-CER,CHIP;100nF,+80-20%,25V,Y5V,1608	1	SA
....4	C4068	2203-000189	C-CER,CHIP;100nF,+80-20%,25V,Y5V,1608	1	SA
....4	C4069	2203-000189	C-CER,CHIP;100nF,+80-20%,25V,Y5V,1608	1	SA
....4	C4070	2203-000189	C-CER,CHIP;100nF,+80-20%,25V,Y5V,1608	1	SA
....4	C4071	2203-000189	C-CER,CHIP;100nF,+80-20%,25V,Y5V,1608	1	SA
....4	C4073	2203-000189	C-CER,CHIP;100nF,+80-20%,25V,Y5V,1608	1	SA
....4	C4076	2203-000189	C-CER,CHIP;100nF,+80-20%,25V,Y5V,1608	1	SA
....4	C4077	2203-000189	C-CER,CHIP;100nF,+80-20%,25V,Y5V,1608	1	SA
....4	C4080	2203-000189	C-CER,CHIP;100nF,+80-20%,25V,Y5V,1608	1	SA
....4	C4081	2203-000189	C-CER,CHIP;100nF,+80-20%,25V,Y5V,1608	1	SA
....4	C4083	2203-000189	C-CER,CHIP;100nF,+80-20%,25V,Y5V,1608	1	SA
....4	C4084	2203-000189	C-CER,CHIP;100nF,+80-20%,25V,Y5V,1608	1	SA
....4	C4085	2203-000189	C-CER,CHIP;100nF,+80-20%,25V,Y5V,1608	1	SA
....4	C4086	2203-000189	C-CER,CHIP;100nF,+80-20%,25V,Y5V,1608	1	SA
....4	C4095	2203-000189	C-CER,CHIP;100nF,+80-20%,25V,Y5V,1608	1	SA
....4	C4128	2203-000189	C-CER,CHIP;100nF,+80-20%,25V,Y5V,1608	1	SA
....4	C5026	2203-000189	C-CER,CHIP;100nF,+80-20%,25V,Y5V,1608	1	SA
....4	C5038	2203-000189	C-CER,CHIP;100nF,+80-20%,25V,Y5V,1608	1	SA
....4	C5043	2203-000189	C-CER,CHIP;100nF,+80-20%,25V,Y5V,1608	1	SA
....4	C5022	2203-000221	C-CER,CHIP;100nF,20%,50V,Y5V,TP,3216	1	SA
....4	C1050	2203-000236	C-CER,CHIP;0.1nF,5%,50V,C0G,1608	1	SA
....4	C1134	2203-000236	C-CER,CHIP;0.1nF,5%,50V,C0G,1608	1	SA
....4	C1135	2203-000236	C-CER,CHIP;0.1nF,5%,50V,C0G,1608	1	SA
....4	C1161	2203-000236	C-CER,CHIP;0.1nF,5%,50V,C0G,1608	1	SA
....4	C1162	2203-000236	C-CER,CHIP;0.1nF,5%,50V,C0G,1608	1	SA
....4	C1163	2203-000236	C-CER,CHIP;0.1nF,5%,50V,C0G,1608	1	SA
....4	C2003	2203-000236	C-CER,CHIP;0.1nF,5%,50V,C0G,1608	1	SA
....4	C2004	2203-000236	C-CER,CHIP;0.1nF,5%,50V,C0G,1608	1	SA
....4	C2005	2203-000236	C-CER,CHIP;0.1nF,5%,50V,C0G,1608	1	SA
....4	C2006	2203-000236	C-CER,CHIP;0.1nF,5%,50V,C0G,1608	1	SA
....4	C2007	2203-000236	C-CER,CHIP;0.1nF,5%,50V,C0G,1608	1	SA
....4	C2011	2203-000236	C-CER,CHIP;0.1nF,5%,50V,C0G,1608	1	SA
....4	C2012	2203-000236	C-CER,CHIP;0.1nF,5%,50V,C0G,1608	1	SA

ELECTRONIC SERVICE TIRGOVISTE

Level	Loc. No.	Code No.	Description & Specification	Q'ty	SA/SNA
....4	C2013	2203-000236	C-CER,CHIP;0.1nF,5%,50V,C0G,1608	1	SA
....4	C2014	2203-000236	C-CER,CHIP;0.1nF,5%,50V,C0G,1608	1	SA
....4	C2019	2203-000236	C-CER,CHIP;0.1nF,5%,50V,C0G,1608	1	SA
....4	C2020	2203-000236	C-CER,CHIP;0.1nF,5%,50V,C0G,1608	1	SA
....4	C2022_DE	2203-000236	C-CER,CHIP;0.1nF,5%,50V,C0G,1608	1	SA
....4	C2023	2203-000236	C-CER,CHIP;0.1nF,5%,50V,C0G,1608	1	SA
....4	C2024	2203-000236	C-CER,CHIP;0.1nF,5%,50V,C0G,1608	1	SA
....4	C2025	2203-000236	C-CER,CHIP;0.1nF,5%,50V,C0G,1608	1	SA
....4	C2027	2203-000236	C-CER,CHIP;0.1nF,5%,50V,C0G,1608	1	SA
....4	C2028	2203-000236	C-CER,CHIP;0.1nF,5%,50V,C0G,1608	1	SA
....4	C2032_26	2203-000236	C-CER,CHIP;0.1nF,5%,50V,C0G,1608	1	SA
....4	C3024	2203-000236	C-CER,CHIP;0.1nF,5%,50V,C0G,1608	1	SA
....4	C3025	2203-000236	C-CER,CHIP;0.1nF,5%,50V,C0G,1608	1	SA
....4	C5059	2203-000236	C-CER,CHIP;0.1nF,5%,50V,C0G,1608	1	SA
....4	C5068	2203-000236	C-CER,CHIP;0.1nF,5%,50V,C0G,1608	1	SA
....4	C5069	2203-000236	C-CER,CHIP;0.1nF,5%,50V,C0G,1608	1	SA
....4	C5084	2203-000236	C-CER,CHIP;0.1nF,5%,50V,C0G,1608	1	SA
....4	C5085	2203-000236	C-CER,CHIP;0.1nF,5%,50V,C0G,1608	1	SA
....4	C1002	2203-000257	C-CER,CHIP;10nF,10%,50V,X7R,1608	1	SA
....4	C1005	2203-000257	C-CER,CHIP;10nF,10%,50V,X7R,1608	1	SA
....4	C1013	2203-000257	C-CER,CHIP;10nF,10%,50V,X7R,1608	1	SA
....4	C1022	2203-000257	C-CER,CHIP;10nF,10%,50V,X7R,1608	1	SA
....4	C1026	2203-000257	C-CER,CHIP;10nF,10%,50V,X7R,1608	1	SA
....4	C1034	2203-000257	C-CER,CHIP;10nF,10%,50V,X7R,1608	1	SA
....4	C1049	2203-000257	C-CER,CHIP;10nF,10%,50V,X7R,1608	1	SA
....4	C1094	2203-000257	C-CER,CHIP;10nF,10%,50V,X7R,1608	1	SA
....4	C3035	2203-000257	C-CER,CHIP;10nF,10%,50V,X7R,1608	1	SA
....4	C4005	2203-000257	C-CER,CHIP;10nF,10%,50V,X7R,1608	1	SA
....4	C4006	2203-000257	C-CER,CHIP;10nF,10%,50V,X7R,1608	1	SA
....4	C4007	2203-000257	C-CER,CHIP;10nF,10%,50V,X7R,1608	1	SA
....4	C4008	2203-000257	C-CER,CHIP;10nF,10%,50V,X7R,1608	1	SA
....4	C4009	2203-000257	C-CER,CHIP;10nF,10%,50V,X7R,1608	1	SA
....4	C4124	2203-000257	C-CER,CHIP;10nF,10%,50V,X7R,1608	1	SA
....4	C5006	2203-000257	C-CER,CHIP;10nF,10%,50V,X7R,1608	1	SA
....4	C5007	2203-000257	C-CER,CHIP;10nF,10%,50V,X7R,1608	1	SA
....4	C5008	2203-000257	C-CER,CHIP;10nF,10%,50V,X7R,1608	1	SA
....4	C5009	2203-000257	C-CER,CHIP;10nF,10%,50V,X7R,1608	1	SA
....4	C5010	2203-000257	C-CER,CHIP;10nF,10%,50V,X7R,1608	1	SA
....4	C5017	2203-000257	C-CER,CHIP;10nF,10%,50V,X7R,1608	1	SA
....4	C5036	2203-000257	C-CER,CHIP;10nF,10%,50V,X7R,1608	1	SA
....4	C5040	2203-000257	C-CER,CHIP;10nF,10%,50V,X7R,1608	1	SA
....4	C5061	2203-000257	C-CER,CHIP;10nF,10%,50V,X7R,1608	1	SA
....4	C5062	2203-000257	C-CER,CHIP;10nF,10%,50V,X7R,1608	1	SA
....4	C5064	2203-000257	C-CER,CHIP;10nF,10%,50V,X7R,1608	1	SA
....4	C1110	2203-000426	C-CER,CHIP;0.018nF,5%,50V,C0G,1608	1	SA
....4	C1121	2203-000440	C-CER,CHIP;1nF,10%,50V,X7R,1608	1	SA
....4	C3002	2203-000440	C-CER,CHIP;1nF,10%,50V,X7R,1608	1	SA
....4	C3003	2203-000440	C-CER,CHIP;1nF,10%,50V,X7R,1608	1	SA
....4	C3007	2203-000440	C-CER,CHIP;1nF,10%,50V,X7R,1608	1	SA
....4	C3020	2203-000440	C-CER,CHIP;1nF,10%,50V,X7R,1608	1	SA
....4	C3021	2203-000440	C-CER,CHIP;1nF,10%,50V,X7R,1608	1	SA
....4	C3029	2203-000440	C-CER,CHIP;1nF,10%,50V,X7R,1608	1	SA
....4	C4119	2203-000440	C-CER,CHIP;1nF,10%,50V,X7R,1608	1	SA
....4	C5087	2203-000440	C-CER,CHIP;1nF,10%,50V,X7R,1608	1	SA
....4	C4058	2203-000531	C-CER,CHIP;2.7nF,10%,50V,X7R,1608	1	SA
....4	C4066	2203-000531	C-CER,CHIP;2.7nF,10%,50V,X7R,1608	1	SA
....4	C4001	2203-000552	C-CER,CHIP;0.02nF,5%,50V,C0G,1608	1	SA
....4	C4011	2203-000552	C-CER,CHIP;0.02nF,5%,50V,C0G,1608	1	SA
....4	C1070	2203-000626	C-CER,CHIP;0.022nF,5%,50V,C0G,1608	1	SA
....4	C1082	2203-000626	C-CER,CHIP;0.022nF,5%,50V,C0G,1608	1	SA

ELECTRONIC SERVICE TIRGOVISTE

Level	Loc. No.	Code No.	Description & Specification	Q'ty	SA/SNA
....4	C3012	2203-000626	C-CER,CHIP;0.022nF,5%,50V,C0G,1608	1	SA
....4	C3013	2203-000626	C-CER,CHIP;0.022nF,5%,50V,C0G,1608	1	SA
....4	C3030	2203-000626	C-CER,CHIP;0.022nF,5%,50V,C0G,1608	1	SA
....4	C3031	2203-000626	C-CER,CHIP;0.022nF,5%,50V,C0G,1608	1	SA
....4	C1111	2203-000715	C-CER,CHIP;3.3nF,10%,50V,X7R,1608	1	SA
....4	C1142	2203-000783	C-CER,CHIP;0.33nF,5%,50V,C0G,1608	1	SA
....4	C1152	2203-000783	C-CER,CHIP;0.33nF,5%,50V,C0G,1608	1	SA
....4	C2009	2203-000783	C-CER,CHIP;0.33nF,5%,50V,C0G,1608	1	SA
....4	C2010	2203-000783	C-CER,CHIP;0.33nF,5%,50V,C0G,1608	1	SA
....4	C2015	2203-000783	C-CER,CHIP;0.33nF,5%,50V,C0G,1608	1	SA
....4	C2016	2203-000783	C-CER,CHIP;0.33nF,5%,50V,C0G,1608	1	SA
....4	C2026	2203-000783	C-CER,CHIP;0.33nF,5%,50V,C0G,1608	1	SA
....4	C5076	2203-000783	C-CER,CHIP;0.33nF,5%,50V,C0G,1608	1	SA
....4	C5077	2203-000783	C-CER,CHIP;0.33nF,5%,50V,C0G,1608	1	SA
....4	C1100	2203-000798	C-CER,CHIP;33nF,10%,16V,X7R,TP,1608,-	1	SA
....4	C1101	2203-000798	C-CER,CHIP;33nF,10%,16V,X7R,TP,1608,-	1	SA
....4	C2029	2203-000815	C-CER,CHIP;0.033nF,5%,50V,C0G,1608	1	SA
....4	C2030	2203-000815	C-CER,CHIP;0.033nF,5%,50V,C0G,1608	1	SA
....4	C2031	2203-000815	C-CER,CHIP;0.033nF,5%,50V,C0G,1608	1	SA
....4	C5056	2203-000815	C-CER,CHIP;0.033nF,5%,50V,C0G,1608	1	SA
....4	C5057	2203-000815	C-CER,CHIP;0.033nF,5%,50V,C0G,1608	1	SA
....4	C5058	2203-000815	C-CER,CHIP;0.033nF,5%,50V,C0G,1608	1	SA
....4	C1119	2203-000888	C-CER,CHIP;4.7nF,10%,50V,X7R,1608	1	SA
....4	C1120	2203-000888	C-CER,CHIP;4.7nF,10%,50V,X7R,1608	1	SA
....4	C4003	2203-000888	C-CER,CHIP;4.7nF,10%,50V,X7R,1608	1	SA
....4	C4004	2203-000888	C-CER,CHIP;4.7nF,10%,50V,X7R,1608	1	SA
....4	C5003	2203-000888	C-CER,CHIP;4.7nF,10%,50V,X7R,1608	1	SA
....4	C5004	2203-000888	C-CER,CHIP;4.7nF,10%,50V,X7R,1608	1	SA
....4	C1063	2203-000972	C-CER,CHIP;47nF,10%,16V,X7R,1608	1	SA
....4	C2008	2203-000998	C-CER,CHIP;0.047nF,5%,50V,C0G,1608	1	SA
....4	C2021	2203-000998	C-CER,CHIP;0.047nF,5%,50V,C0G,1608	1	SA
....4	C5063	2203-000998	C-CER,CHIP;0.047nF,5%,50V,C0G,1608	1	SA
....4	C1056	2203-001402	C-CER,CHIP;220nF,+80-20%,16V,Y5V,TP,1608	1	SA
....4	C1164	2203-001607	C-CER,CHIP;0.22nF,5%,50V,NP0,1608	1	SA
....4	C1114	2203-001652	C-CER,CHIP;470nF,+80-20%,16V,Y5V,1608	1	SA
....4	C1116	2203-001652	C-CER,CHIP;470nF,+80-20%,16V,Y5V,1608	1	SA
....4	C1038	2203-001656	C-CER,CHIP;0.47nF,5%,50V,NP0,1608	1	SA
....4	C1061	2203-001656	C-CER,CHIP;0.47nF,5%,50V,NP0,1608	1	SA
....4	C3039	2203-001656	C-CER,CHIP;0.47nF,5%,50V,NP0,1608	1	SA
....4	C1117	2203-001724	C-CER,CHIP;4700nF,+80-20%,16V,Y5V,3216	1	SA
....4	C1003	2203-005005	C-CER,CHIP;100nF,10%,16V,X7R,1608	1	SA
....4	C1011	2203-005005	C-CER,CHIP;100nF,10%,16V,X7R,1608	1	SA
....4	C1032	2203-005005	C-CER,CHIP;100nF,10%,16V,X7R,1608	1	SA
....4	C1039	2203-005005	C-CER,CHIP;100nF,10%,16V,X7R,1608	1	SA
....4	C1066	2203-005005	C-CER,CHIP;100nF,10%,16V,X7R,1608	1	SA
....4	C1068	2203-005005	C-CER,CHIP;100nF,10%,16V,X7R,1608	1	SA
....4	C1071	2203-005005	C-CER,CHIP;100nF,10%,16V,X7R,1608	1	SA
....4	C1072	2203-005005	C-CER,CHIP;100nF,10%,16V,X7R,1608	1	SA
....4	C1073	2203-005005	C-CER,CHIP;100nF,10%,16V,X7R,1608	1	SA
....4	C1074	2203-005005	C-CER,CHIP;100nF,10%,16V,X7R,1608	1	SA
....4	C1078	2203-005005	C-CER,CHIP;100nF,10%,16V,X7R,1608	1	SA
....4	C1079	2203-005005	C-CER,CHIP;100nF,10%,16V,X7R,1608	1	SA
....4	C1093	2203-005005	C-CER,CHIP;100nF,10%,16V,X7R,1608	1	SA
....4	C1104	2203-005005	C-CER,CHIP;100nF,10%,16V,X7R,1608	1	SA
....4	C1108	2203-005005	C-CER,CHIP;100nF,10%,16V,X7R,1608	1	SA
....4	C1129	2203-005005	C-CER,CHIP;100nF,10%,16V,X7R,1608	1	SA
....4	C1130	2203-005005	C-CER,CHIP;100nF,10%,16V,X7R,1608	1	SA
....4	C1148	2203-005005	C-CER,CHIP;100nF,10%,16V,X7R,1608	1	SA
....4	C1169	2203-005005	C-CER,CHIP;100nF,10%,16V,X7R,1608	1	SA
....4	C3009	2203-005005	C-CER,CHIP;100nF,10%,16V,X7R,1608	1	SA

ELECTRONIC SERVICE TIRGOVISTE

Level	Loc. No.	Code No.	Description & Specification	Q'ty	SA/SNA
....4	C3010	2203-005005	C-CER,CHIP;100nF,10%,16V,X7R,1608	1	SA
....4	C3014	2203-005005	C-CER,CHIP;100nF,10%,16V,X7R,1608	1	SA
....4	C3015	2203-005005	C-CER,CHIP;100nF,10%,16V,X7R,1608	1	SA
....4	C3016	2203-005005	C-CER,CHIP;100nF,10%,16V,X7R,1608	1	SA
....4	C3018	2203-005005	C-CER,CHIP;100nF,10%,16V,X7R,1608	1	SA
....4	C3019	2203-005005	C-CER,CHIP;100nF,10%,16V,X7R,1608	1	SA
....4	C3022	2203-005005	C-CER,CHIP;100nF,10%,16V,X7R,1608	1	SA
....4	C3026	2203-005005	C-CER,CHIP;100nF,10%,16V,X7R,1608	1	SA
....4	C3027	2203-005005	C-CER,CHIP;100nF,10%,16V,X7R,1608	1	SA
....4	C3032	2203-005005	C-CER,CHIP;100nF,10%,16V,X7R,1608	1	SA
....4	C3037	2203-005005	C-CER,CHIP;100nF,10%,16V,X7R,1608	1	SA
....4	C3040	2203-005005	C-CER,CHIP;100nF,10%,16V,X7R,1608	1	SA
....4	C3042	2203-005005	C-CER,CHIP;100nF,10%,16V,X7R,1608	1	SA
....4	C3044	2203-005005	C-CER,CHIP;100nF,10%,16V,X7R,1608	1	SA
....4	C3046	2203-005005	C-CER,CHIP;100nF,10%,16V,X7R,1608	1	SA
....4	C3047	2203-005005	C-CER,CHIP;100nF,10%,16V,X7R,1608	1	SA
....4	C3049	2203-005005	C-CER,CHIP;100nF,10%,16V,X7R,1608	1	SA
....4	C4002	2203-005005	C-CER,CHIP;100nF,10%,16V,X7R,1608	1	SA
....4	C4125	2203-005005	C-CER,CHIP;100nF,10%,16V,X7R,1608	1	SA
....4	C4126	2203-005005	C-CER,CHIP;100nF,10%,16V,X7R,1608	1	SA
....4	C4129	2203-005005	C-CER,CHIP;100nF,10%,16V,X7R,1608	1	SA
....4	C5001	2203-005005	C-CER,CHIP;100nF,10%,16V,X7R,1608	1	SA
....4	C5002	2203-005005	C-CER,CHIP;100nF,10%,16V,X7R,1608	1	SA
....4	C5011	2203-005005	C-CER,CHIP;100nF,10%,16V,X7R,1608	1	SA
....4	C5012	2203-005005	C-CER,CHIP;100nF,10%,16V,X7R,1608	1	SA
....4	C5021	2203-005005	C-CER,CHIP;100nF,10%,16V,X7R,1608	1	SA
....4	C5023	2203-005005	C-CER,CHIP;100nF,10%,16V,X7R,1608	1	SA
....4	C5039	2203-005005	C-CER,CHIP;100nF,10%,16V,X7R,1608	1	SA
....4	C5054	2203-005005	C-CER,CHIP;100nF,10%,16V,X7R,1608	1	SA
....4	C1143	2203-005030	C-CER,CHIP;470nF,+80-20%,50V,Y5V,TP,3216	1	SA
....4	C1153	2203-005030	C-CER,CHIP;470nF,+80-20%,50V,Y5V,TP,3216	1	SA
....4	C1031	2203-005065	C-CER,CHIP;1000nF,+80-20%,10V,Y5V,1608	1	SA
....4	C1040	2203-005065	C-CER,CHIP;1000nF,+80-20%,10V,Y5V,1608	1	SA
....4	C1155	2203-005065	C-CER,CHIP;1000nF,+80-20%,10V,Y5V,1608	1	SA
....4	C2038	2203-005065	C-CER,CHIP;1000nF,+80-20%,10V,Y5V,1608	1	SA
....4	C3023	2203-005065	C-CER,CHIP;1000nF,+80-20%,10V,Y5V,1608	1	SA
....4	C3033	2203-005065	C-CER,CHIP;1000nF,+80-20%,10V,Y5V,1608	1	SA
....4	C4117	2203-005065	C-CER,CHIP;1000nF,+80-20%,10V,Y5V,1608	1	SA
....4	C4118	2203-005065	C-CER,CHIP;1000nF,+80-20%,10V,Y5V,1608	1	SA
....4	C1122	2203-005249	C-CER,CHIP;100nF,10%,50V,X7R,1608	1	SA
....4	C1131	2203-005249	C-CER,CHIP;100nF,10%,50V,X7R,1608	1	SA
....4	C1137	2203-005249	C-CER,CHIP;100nF,10%,50V,X7R,1608	1	SA
....4	C1138	2203-005249	C-CER,CHIP;100nF,10%,50V,X7R,1608	1	SA
....4	C1140	2203-005249	C-CER,CHIP;100nF,10%,50V,X7R,1608	1	SA
....4	C1144	2203-005249	C-CER,CHIP;100nF,10%,50V,X7R,1608	1	SA
....4	C1145	2203-005249	C-CER,CHIP;100nF,10%,50V,X7R,1608	1	SA
....4	C1146	2203-005249	C-CER,CHIP;100nF,10%,50V,X7R,1608	1	SA
....4	C1147	2203-005249	C-CER,CHIP;100nF,10%,50V,X7R,1608	1	SA
....4	C1149	2203-005249	C-CER,CHIP;100nF,10%,50V,X7R,1608	1	SA
....4	C1150	2203-005249	C-CER,CHIP;100nF,10%,50V,X7R,1608	1	SA
....4	C1154	2203-005249	C-CER,CHIP;100nF,10%,50V,X7R,1608	1	SA
....4	C1156	2203-005249	C-CER,CHIP;100nF,10%,50V,X7R,1608	1	SA
....4	C1157	2203-005249	C-CER,CHIP;100nF,10%,50V,X7R,1608	1	SA
....4	C1160	2203-005249	C-CER,CHIP;100nF,10%,50V,X7R,1608	1	SA
....4	C1166	2203-005249	C-CER,CHIP;100nF,10%,50V,X7R,1608	1	SA
....4	C4014	2203-005533	C-CER,CHIP;1000nF,20%,6.3V,X7R,TP,1608	1	SA
....4	C4015	2203-005533	C-CER,CHIP;1000nF,20%,6.3V,X7R,TP,1608	1	SA
....4	C4024	2203-005533	C-CER,CHIP;1000nF,20%,6.3V,X7R,TP,1608	1	SA
....4	C4033	2203-005533	C-CER,CHIP;1000nF,20%,6.3V,X7R,TP,1608	1	SA
....4	C4037	2203-005533	C-CER,CHIP;1000nF,20%,6.3V,X7R,TP,1608	1	SA

ELECTRONIC SERVICE TIRGOVISTE

Level	Loc. No.	Code No.	Description & Specification	Q'ty	SA/SNA
....4	C4044	2203-005533	C-CER,CHIP;1000nF,20%,6.3V,X7R,TP,1608	1	SA
....4	C4050	2203-005533	C-CER,CHIP;1000nF,20%,6.3V,X7R,TP,1608	1	SA
....4	C4065	2203-005533	C-CER,CHIP;1000nF,20%,6.3V,X7R,TP,1608	1	SA
....4	C4074	2203-005533	C-CER,CHIP;1000nF,20%,6.3V,X7R,TP,1608	1	SA
....4	C4075	2203-005533	C-CER,CHIP;1000nF,20%,6.3V,X7R,TP,1608	1	SA
....4	C4078	2203-005533	C-CER,CHIP;1000nF,20%,6.3V,X7R,TP,1608	1	SA
....4	C4079	2203-005533	C-CER,CHIP;1000nF,20%,6.3V,X7R,TP,1608	1	SA
....4	C4087	2203-005533	C-CER,CHIP;1000nF,20%,6.3V,X7R,TP,1608	1	SA
....4	C4088	2203-005533	C-CER,CHIP;1000nF,20%,6.3V,X7R,TP,1608	1	SA
....4	C4089	2203-005533	C-CER,CHIP;1000nF,20%,6.3V,X7R,TP,1608	1	SA
....4	C4090	2203-005533	C-CER,CHIP;1000nF,20%,6.3V,X7R,TP,1608	1	SA
....4	C4091	2203-005533	C-CER,CHIP;1000nF,20%,6.3V,X7R,TP,1608	1	SA
....4	C4092	2203-005533	C-CER,CHIP;1000nF,20%,6.3V,X7R,TP,1608	1	SA
....4	C4093	2203-005533	C-CER,CHIP;1000nF,20%,6.3V,X7R,TP,1608	1	SA
....4	C4094	2203-005533	C-CER,CHIP;1000nF,20%,6.3V,X7R,TP,1608	1	SA
....4	C1001	2203-006333	C-CER,CHIP;10000nF,20%,16V,X5R,TP,3216	1	SA
....4	C1012	2203-006333	C-CER,CHIP;10000nF,20%,16V,X5R,TP,3216	1	SA
....4	C1014	2203-006333	C-CER,CHIP;10000nF,20%,16V,X5R,TP,3216	1	SA
....4	C1017	2203-006333	C-CER,CHIP;10000nF,20%,16V,X5R,TP,3216	1	SA
....4	C1018	2203-006333	C-CER,CHIP;10000nF,20%,16V,X5R,TP,3216	1	SA
....4	C1019	2203-006333	C-CER,CHIP;10000nF,20%,16V,X5R,TP,3216	1	SA
....4	C1020	2203-006333	C-CER,CHIP;10000nF,20%,16V,X5R,TP,3216	1	SA
....4	C1023	2203-006333	C-CER,CHIP;10000nF,20%,16V,X5R,TP,3216	1	SA
....4	C1024	2203-006333	C-CER,CHIP;10000nF,20%,16V,X5R,TP,3216	1	SA
....4	C1030	2203-006333	C-CER,CHIP;10000nF,20%,16V,X5R,TP,3216	1	SA
....4	C1033	2203-006333	C-CER,CHIP;10000nF,20%,16V,X5R,TP,3216	1	SA
....4	C1035	2203-006333	C-CER,CHIP;10000nF,20%,16V,X5R,TP,3216	1	SA
....4	C1041	2203-006333	C-CER,CHIP;10000nF,20%,16V,X5R,TP,3216	1	SA
....4	C1044	2203-006333	C-CER,CHIP;10000nF,20%,16V,X5R,TP,3216	1	SA
....4	C1045	2203-006333	C-CER,CHIP;10000nF,20%,16V,X5R,TP,3216	1	SA
....4	C1047	2203-006333	C-CER,CHIP;10000nF,20%,16V,X5R,TP,3216	1	SA
....4	C1048	2203-006333	C-CER,CHIP;10000nF,20%,16V,X5R,TP,3216	1	SA
....4	C1051	2203-006333	C-CER,CHIP;10000nF,20%,16V,X5R,TP,3216	1	SA
....4	C1058	2203-006333	C-CER,CHIP;10000nF,20%,16V,X5R,TP,3216	1	SA
....4	C1060	2203-006333	C-CER,CHIP;10000nF,20%,16V,X5R,TP,3216	1	SA
....4	C1065	2203-006333	C-CER,CHIP;10000nF,20%,16V,X5R,TP,3216	1	SA
....4	C1076	2203-006333	C-CER,CHIP;10000nF,20%,16V,X5R,TP,3216	1	SA
....4	C1080	2203-006333	C-CER,CHIP;10000nF,20%,16V,X5R,TP,3216	1	SA
....4	C1081	2203-006333	C-CER,CHIP;10000nF,20%,16V,X5R,TP,3216	1	SA
....4	C1083	2203-006333	C-CER,CHIP;10000nF,20%,16V,X5R,TP,3216	1	SA
....4	C1085	2203-006333	C-CER,CHIP;10000nF,20%,16V,X5R,TP,3216	1	SA
....4	C1088	2203-006333	C-CER,CHIP;10000nF,20%,16V,X5R,TP,3216	1	SA
....4	C1089	2203-006333	C-CER,CHIP;10000nF,20%,16V,X5R,TP,3216	1	SA
....4	C1090	2203-006333	C-CER,CHIP;10000nF,20%,16V,X5R,TP,3216	1	SA
....4	C1091	2203-006333	C-CER,CHIP;10000nF,20%,16V,X5R,TP,3216	1	SA
....4	C1092	2203-006333	C-CER,CHIP;10000nF,20%,16V,X5R,TP,3216	1	SA
....4	C1096	2203-006333	C-CER,CHIP;10000nF,20%,16V,X5R,TP,3216	1	SA
....4	C1099	2203-006333	C-CER,CHIP;10000nF,20%,16V,X5R,TP,3216	1	SA
....4	C1126	2203-006333	C-CER,CHIP;10000nF,20%,16V,X5R,TP,3216	1	SA
....4	C1136	2203-006333	C-CER,CHIP;10000nF,20%,16V,X5R,TP,3216	1	SA
....4	C3017	2203-006333	C-CER,CHIP;10000nF,20%,16V,X5R,TP,3216	1	SA
....4	C4057	2203-006333	C-CER,CHIP;10000nF,20%,16V,X5R,TP,3216	1	SA
....4	C4064	2203-006333	C-CER,CHIP;10000nF,20%,16V,X5R,TP,3216	1	SA
....4	C4072	2203-006333	C-CER,CHIP;10000nF,20%,16V,X5R,TP,3216	1	SA
....4	C4082	2203-006333	C-CER,CHIP;10000nF,20%,16V,X5R,TP,3216	1	SA
....4	C4122	2203-006333	C-CER,CHIP;10000nF,20%,16V,X5R,TP,3216	1	SA
....4	C5083	2203-006333	C-CER,CHIP;10000nF,20%,16V,X5R,TP,3216	1	SA
....4	C5086	2203-006333	C-CER,CHIP;10000nF,20%,16V,X5R,TP,3216	1	SA
....4	C2001	2402-000108	C-AL,SMD;10uF,20%,16V,WT,TP,4.3x4.3x5.2m	1	SA
....4	C5037	2402-000108	C-AL,SMD;10uF,20%,16V,WT,TP,4.3x4.3x5.2m	1	SA

ELECTRONIC SERVICE TIRGOVISTE

Level	Loc. No.	Code No.	Description & Specification	Q'ty	SA/SNA
....4	C5041	2402-000108	C-AL,SMD;10uF,20%,16V,WT,TP,4.3x4.3x5.2m	1	SA
....4	C1102	2402-001081	C-AL,SMD;100uF,20%,25V,WT,TP,8.3x8.3x10	1	SA
....4	C1125	2402-001083	C-AL,SMD;100uF,20%,50V,GP,TP,10x10.3x10m	1	SA
....4	C5032	2402-001097	C-AL,SMD;0.1UF,20%,50V,WT,TP,4.3X4.3X5.2	1	SA
....4	C5033	2402-001097	C-AL,SMD;0.1UF,20%,50V,WT,TP,4.3X4.3X5.2	1	SA
....4	C1009	2402-001128	C-AL,SMD;100UF,20%,16V,WT,TP,6.3X5.7MM	1	SA
....4	C1010	2402-001128	C-AL,SMD;100UF,20%,16V,WT,TP,6.3X5.7MM	1	SA
....4	C1015	2402-001128	C-AL,SMD;100UF,20%,16V,WT,TP,6.3X5.7MM	1	SA
....4	C1029	2402-001128	C-AL,SMD;100UF,20%,16V,WT,TP,6.3X5.7MM	1	SA
....4	C1036	2402-001128	C-AL,SMD;100UF,20%,16V,WT,TP,6.3X5.7MM	1	SA
....4	C1042	2402-001128	C-AL,SMD;100UF,20%,16V,WT,TP,6.3X5.7MM	1	SA
....4	C1059	2402-001128	C-AL,SMD;100UF,20%,16V,WT,TP,6.3X5.7MM	1	SA
....4	C1112	2402-001128	C-AL,SMD;100UF,20%,16V,WT,TP,6.3X5.7MM	1	SA
....4	C1113	2402-001128	C-AL,SMD;100UF,20%,16V,WT,TP,6.3X5.7MM	1	SA
....4	C1115	2402-001128	C-AL,SMD;100UF,20%,16V,WT,TP,6.3X5.7MM	1	SA
....4	C1123	2402-001128	C-AL,SMD;100UF,20%,16V,WT,TP,6.3X5.7MM	1	SA
....4	C1007	2402-001129	C-AL,SMD;47UF,20%,16V,WT,TP,6.3X5.2MM	1	SA
....4	C1028	2402-001129	C-AL,SMD;47UF,20%,16V,WT,TP,6.3X5.2MM	1	SA
....4	C1064	2402-001129	C-AL,SMD;47UF,20%,16V,WT,TP,6.3X5.2MM	1	SA
....4	C1069	2402-001129	C-AL,SMD;47UF,20%,16V,WT,TP,6.3X5.2MM	1	SA
....4	C1107	2402-001129	C-AL,SMD;47UF,20%,16V,WT,TP,6.3X5.2MM	1	SA
....4	C3036	2402-001129	C-AL,SMD;47UF,20%,16V,WT,TP,6.3X5.2MM	1	SA
....4	C3038	2402-001129	C-AL,SMD;47UF,20%,16V,WT,TP,6.3X5.2MM	1	SA
....4	C4010	2402-001129	C-AL,SMD;47UF,20%,16V,WT,TP,6.3X5.2MM	1	SA
....4	C5042	2402-001129	C-AL,SMD;47UF,20%,16V,WT,TP,6.3X5.2MM	1	SA
....4	C1106	2402-001160	C-AL,SMD;330UF,20%,16V,WT,TP,1008	1	SA
....4	C1077	2402-001178	C-AL,SMD;10uF,20%,16V,WT,TP,4.3x4.3x5.8m	1	SA
....4	C1139	2402-001178	C-AL,SMD;10uF,20%,16V,WT,TP,4.3x4.3x5.8m	1	SA
....4	C2017	2402-001178	C-AL,SMD;10uF,20%,16V,WT,TP,4.3x4.3x5.8m	1	SA
....4	C3004	2402-001178	C-AL,SMD;10uF,20%,16V,WT,TP,4.3x4.3x5.8m	1	SA
....4	C3006	2402-001178	C-AL,SMD;10uF,20%,16V,WT,TP,4.3x4.3x5.8m	1	SA
....4	C3008	2402-001178	C-AL,SMD;10uF,20%,16V,WT,TP,4.3x4.3x5.8m	1	SA
....4	C3011	2402-001178	C-AL,SMD;10uF,20%,16V,WT,TP,4.3x4.3x5.8m	1	SA
....4	C3028	2402-001178	C-AL,SMD;10uF,20%,16V,WT,TP,4.3x4.3x5.8m	1	SA
....4	C3041	2402-001178	C-AL,SMD;10uF,20%,16V,WT,TP,4.3x4.3x5.8m	1	SA
....4	C3043	2402-001178	C-AL,SMD;10uF,20%,16V,WT,TP,4.3x4.3x5.8m	1	SA
....4	C3045	2402-001178	C-AL,SMD;10uF,20%,16V,WT,TP,4.3x4.3x5.8m	1	SA
....4	C3048	2402-001178	C-AL,SMD;10uF,20%,16V,WT,TP,4.3x4.3x5.8m	1	SA
....4	C3050	2402-001178	C-AL,SMD;10uF,20%,16V,WT,TP,4.3x4.3x5.8m	1	SA
....4	C3051	2402-001178	C-AL,SMD;10uF,20%,16V,WT,TP,4.3x4.3x5.8m	1	SA
....4	C1057	2402-001183	C-AL,SMD;22UF,20%,16V,WT,TP,5.3X5.3X6MM	1	SA
....4	C1128	2402-001183	C-AL,SMD;22UF,20%,16V,WT,TP,5.3X5.3X6MM	1	SA
....4	C1167	2402-001183	C-AL,SMD;22UF,20%,16V,WT,TP,5.3X5.3X6MM	1	SA
....4	C4123	2402-001183	C-AL,SMD;22UF,20%,16V,WT,TP,5.3X5.3X6MM	1	SA
....4	C5005	2402-001183	C-AL,SMD;22UF,20%,16V,WT,TP,5.3X5.3X6MM	1	SA
....4	C5016	2402-001183	C-AL,SMD;22UF,20%,16V,WT,TP,5.3X5.3X6MM	1	SA
....4	C1127	2402-001221	C-AL,SMD;470UF,20%,16V,-,TP,A8.3XB8.3XL1	1	SA
....4	C1165	2402-001221	C-AL,SMD;470UF,20%,16V,-,TP,A8.3XB8.3XL1	1	SA
....4	C4030	2402-001226	C-AL,SMD;4.7UF,20%,35V,HR,TP,4.3X4.3X5.8	1	SA
....4	C4047	2402-001226	C-AL,SMD;4.7UF,20%,35V,HR,TP,4.3X4.3X5.8	1	SA
....4	C4051	2402-001226	C-AL,SMD;4.7UF,20%,35V,HR,TP,4.3X4.3X5.8	1	SA
....4	C4127	2402-001226	C-AL,SMD;4.7UF,20%,35V,HR,TP,4.3X4.3X5.8	1	SA
....4	C5078	2402-001257	C-AL,SMD;470uF,20%,16V,-,TP,8.3*10	1	SA
....4	C5079	2402-001257	C-AL,SMD;470uF,20%,16V,-,TP,8.3*10	1	SA
....4	C5080	2402-001257	C-AL,SMD;470uF,20%,16V,-,TP,8.3*10	1	SA
....4	C1095	2409-001029	C-ORGANIC;120uF,20%,6.3V,WT,TP,10.3x10.3	1	SA
....4	T0052	2703-000274	INDUCTOR-SMD;2.2uH,10%,2012	1	SA
....4	T0052	2703-000398	INDUCTOR-SMD;10uH,10%,3225	1	SA
....4	T0052	2703-000398	INDUCTOR-SMD;10uH,10%,3225	1	SA
....4	T0052	2703-000398	INDUCTOR-SMD;10uH,10%,3225	1	SA

ELECTRONIC SERVICE TIRGOVISTE

Level	Loc. No.	Code No.	Description & Specification	Q'ty	SA/SNA
....4	T0052	2703-000398	INDUCTOR-SMD;10uH,10%,3225	1	SA
....4	T0052	2703-000398	INDUCTOR-SMD;10uH,10%,3225	1	SA
....4	T0052	2703-000398	INDUCTOR-SMD;10uH,10%,3225	1	SA
....4	T0052	2703-000398	INDUCTOR-SMD;10uH,10%,3225	1	SA
....4	T0052	2703-000398	INDUCTOR-SMD;10uH,10%,3225	1	SA
....4	T0052	2703-000398	INDUCTOR-SMD;10uH,10%,3225	1	SA
....4	T0052	2703-000398	INDUCTOR-SMD;10uH,10%,3225	1	SA
....4	T0052	2703-000398	INDUCTOR-SMD;10uH,10%,3225	1	SA
....4	T0052	2703-000398	INDUCTOR-SMD;10uH,10%,3225	1	SA
....4	T0052	2703-000398	INDUCTOR-SMD;10uH,10%,3225	1	SA
....4	T0052	2703-000398	INDUCTOR-SMD;10uH,10%,3225	1	SA
....4	T0052	2703-000398	INDUCTOR-SMD;10uH,10%,3225	1	SA
....4	T0052	2703-000398	INDUCTOR-SMD;10uH,10%,3225	1	SA
....4	T0052	2703-001229	INDUCTOR-SMD;2.2uH,10%,1608	1	SA
....4	T0052	2703-001229	INDUCTOR-SMD;2.2uH,10%,1608	1	SA
....4	T0052	2703-001229	INDUCTOR-SMD;2.2uH,10%,1608	1	SA
....4	T0052	2703-001229	INDUCTOR-SMD;2.2uH,10%,1608	1	SA
....4	T0052	2703-001229	INDUCTOR-SMD;2.2uH,10%,1608	1	SA
....4	T0052	2703-001229	INDUCTOR-SMD;2.2uH,10%,1608	1	SA
....4	T0052	2703-001778	INDUCTOR-SMD;3.3uH,20%,3225	1	SA
....4	T0052	2703-002722	INDUCTOR-SMD;22uH,20%,12x12mm	1	SA
....4	X3002	2801-003326	CRYSTAL-SMD;24MHZ,30PPM,28-ABX,20PF,50OH	1	SA
....4	X3001	2801-003923	CRYSTAL-SMD;10MHz,30ppm,28-AAN,20pF,60oh	1	SA
....4	X1001	2801-003954	CRYSTAL-SMD;27MHz,30ppm,28-AAN,16pF,50oh	1	SA
....4	X4001	2801-004483	CRYSTAL-SMD;28.322MHz,30ppm,HC-49,20pF,5	1	SA
....4	F103	2901-001114	FILTER-EMI SMD;25VDC,2.0ADC,-,100nF,3.2x	1	SA
....4	T0568	3301-000314	BEAD-SMD;120ohm,1.6x0.8x0.8mm,-,-,-	1	SNA
....4	T0568	3301-000314	BEAD-SMD;120ohm,1.6x0.8x0.8mm,-,-,-	1	SNA
....4	T0568	3301-001145	BEAD-SMD;60ohm,4516,TP,70ohm/45MHz,82ohm	1	SNA
....4	T0568	3301-001145	BEAD-SMD;60ohm,4516,TP,70ohm/45MHz,82ohm	1	SNA
....4	T0568	3301-001145	BEAD-SMD;60ohm,4516,TP,70ohm/45MHz,82ohm	1	SNA
....4	T0568	3301-001145	BEAD-SMD;60ohm,4516,TP,70ohm/45MHz,82ohm	1	SNA
....4	T0568	3301-001236	BEAD-SMD;60ohm,1608,-,-,-	1	SNA
....4	T0568	3301-001236	BEAD-SMD;60ohm,1608,-,-,-	1	SNA
....4	T0568	3301-001236	BEAD-SMD;60ohm,1608,-,-,-	1	SNA
....4	T0568	3301-001236	BEAD-SMD;60ohm,1608,-,-,-	1	SNA
....4	T0568	3301-001236	BEAD-SMD;60ohm,1608,-,-,-	1	SNA
....4	T0568	3301-001236	BEAD-SMD;60ohm,1608,-,-,-	1	SNA
....4	T0568	3301-001324	BEAD-SMD;15ohm,2012,600mA,TP,,,0.1ohm	1	SNA
....4	T0568	3301-001324	BEAD-SMD;15ohm,2012,600mA,TP,,,0.1ohm	1	SNA
....4	T0568	3301-001324	BEAD-SMD;15ohm,2012,600mA,TP,,,0.1ohm	1	SNA
....4	T0568	3301-001324	BEAD-SMD;15ohm,2012,600mA,TP,,,0.1ohm	1	SNA
....4	T0568	3301-001324	BEAD-SMD;15ohm,2012,600mA,TP,,,0.1ohm	1	SNA
....4	T0568	3301-001324	BEAD-SMD;15ohm,2012,600mA,TP,,,0.1ohm	1	SNA
....4	T0568	3301-001324	BEAD-SMD;15ohm,2012,600mA,TP,,,0.1ohm	1	SNA
....4	T0568	3301-001324	BEAD-SMD;15ohm,2012,600mA,TP,,,0.1ohm	1	SNA
....4	T0568	3301-001324	BEAD-SMD;15ohm,2012,600mA,TP,,,0.1ohm	1	SNA
....4	T0568	3301-001324	BEAD-SMD;15ohm,2012,600mA,TP,,,0.1ohm	1	SNA
....4	T0568	3301-001324	BEAD-SMD;15ohm,2012,600mA,TP,,,0.1ohm	1	SNA
....4	T0568	3301-001404	BEAD-SMD;30ohm,2012,TP,-,-	1	SA
....4	T0568	3301-001404	BEAD-SMD;30ohm,2012,TP,-,-	1	SA
....4	T0568	3301-001404	BEAD-SMD;30ohm,2012,TP,-,-	1	SA
....4	T0568	3301-001404	BEAD-SMD;30ohm,2012,TP,-,-	1	SA
....4	T0568	3301-001404	BEAD-SMD;30ohm,2012,TP,-,-	1	SA
....4	T0568	3301-001404	BEAD-SMD;30ohm,2012,TP,-,-	1	SA
....4	T0568	3301-001569	BEAD-SMD;600ohm,2012,1000mA,TP,520ohm/90	1	SNA
....4	T0568	3301-001569	BEAD-SMD;600ohm,2012,1000mA,TP,520ohm/90	1	SNA
....4	T0568	3301-001569	BEAD-SMD;600ohm,2012,1000mA,TP,520ohm/90	1	SNA

ELECTRONIC SERVICE TIRGOVISTE

Level	Loc. No.	Code No.	Description & Specification	Q'ty	SA/SNA
....4	CN2001	3701-001311	CONNECTOR-HDMI;21P,2R,FEMALE,SMD-S,AU30U	1	SA
....4	CN1003	3711-005291	HEADER-BOARD TO CABLE;BOX,2P,1R,2MM,SMD-	1	SA
....4	CN1002	3711-005292	HEADER-BOARD TO CABLE;BOX,3P,1R,2MM,SMD-	1	SA
....4	CN5001	3711-005497	HEADER-BOARD TO CABLE;BOX,15P,1R,1.25MM,	1	SA
....4	M0018	BN97-00805F	ASSY MICOM;T-XXXX-XXXX,LE32R73BDX/XEU49B	1	SA
.....5	IC115	1107-001555	IC-FLASH MEMORY;49BV802A,8MBIT,1MX8/512K	1	SNA
....4	M0018	BN97-00805G	ASSY MICOM;T-XXXX-XXXX,LE32R73BDX/XEU24C	1	SA
.....5	IC520	0903-001389	IC-MICROCONTROLLER;S3F866B,8Bit,QFP,44P,	1	SNA
....4	R1057	2007-007299	R-CHIP;6.81Kohm,1%,1/10W,TP,1608	1	SA
....4	R2024	2007-000040	R-CHIP;150ohm,1%,1/10W,TP,1608	1	SA
....4	R2119	2007-000287	R-CHIP;100OHM,1%,1/10W,TP,1608	1	SA
....4	R2030	2007-001131	R-CHIP;68ohm,1%,1/10W,TP,1608	1	SA
....4	R2056	2007-001131	R-CHIP;68ohm,1%,1/10W,TP,1608	1	SA
....4	R2118	2007-007733	R-CHIP;51ohm,1%,1/10W,TP,1608	1	SA
....4	T0052	2703-002915	INDUCTOR-SMD;22uH,20%,8080	1	SA
....4	T0052	2703-002915	INDUCTOR-SMD;22uH,20%,8080	1	SA
....4	T0052	2703-002915	INDUCTOR-SMD;22uH,20%,8080	1	SA
....4	T0052	2703-002915	INDUCTOR-SMD;22uH,20%,8080	1	SA
....4	R4121	2007-000075	R-CHIP;220ohm,5%,1/10W,TP,1608	1	SA
....4	R4122	2007-000903	R-CHIP;430ohm,1%,1/10W,TP,1608	1	SA
....4	C5024	2402-000179	C-AL,SMD;47uF,20%,16V,GP,TP,6.6x6.6x5.7m	1	SA
....4	C4012	2402-001059	C-AL,SMD;220UF,20%,6.3V,-,TP,6X6.6X6.6	1	SA
....4	C4013	2402-001059	C-AL,SMD;220UF,20%,6.3V,-,TP,6X6.6X6.6	1	SA
....4	T0568	3301-001393	BEAD-SMD;60ohm,3216,1500mA,TP,41ohm/40MH	1	SNA
....4	T0077	BN41-00700A	PCB MAIN;CAMBRIDGE,FR-4,4,MP1.0,1.6T,192	1	SNA
...3	T0562	6046-001013	STAND OFF;M3,L5,Ni PLT,SUM24L,#4-40	2	SNA
..2	T0422	BN94-00887A	ASSY PCB MISC-DTV MODULE;DTV MODULE,XEF	1	SNA
...3	T0245	0202-001522	SOLDER-WIRE FLUX;LFA3-107,-,D1.2,96.5Sn/	0.003	SNA
...3	CN902	3703-001124	CONNECTOR-BACK PANEL;32P,2R,MALE,ANGLE,A	1	SA
...3	CN902	3703-001124	CONNECTOR-BACK PANEL;32P,2R,MALE,ANGLE,A	1	SA
...3	DJ301	3709-001346	CONNECTOR-CARD SLOT;68P,0.27mm,ANGLE,AU1	1	SA
...3	DJ402	3722-001055	JACK-PHONE;5P/2C,AG,BLK,ANGLE	1	SA
...3	T0510	BN97-00843A	ASSY SMD-MAIN;DTV MODULE,XEF	1	SNA
....4	CIS05	0202-001477	SOLDER-CREAM;LST309-M,-,D20~45§-,96.5Sn/	0.465	SNA
....4	DQ701	0501-000434	TR-SMALL SIGNAL;KTC3875S-GR,NPN,150mW,SO	1	SA
....4	DQ401	0501-000669	TR-SMALL SIGNAL;KTA1505Y,PNP,150mW,SOT-2	1	SA
....4	DQ402	0501-000669	TR-SMALL SIGNAL;KTA1505Y,PNP,150mW,SOT-2	1	SA
....4	DQ703	0501-000669	TR-SMALL SIGNAL;KTA1505Y,PNP,150mW,SOT-2	1	SA
....4	DQ704	0501-000669	TR-SMALL SIGNAL;KTA1505Y,PNP,150mW,SOT-2	1	SA
....4	IC104	0801-002095	IC-CMOS LOGIC;74LCX245,TRANSCEIVER,TSSOP	1	SA
....4	IC104	0801-002237	IC-CMOS LOGIC;74V(A)HC1G04,INVERTER,SC70	1	SA
....4	IC104	0801-002394	IC-CMOS LOGIC;74LCX32,OR GATE,SOIC,14P,1	1	SA
....4	IC104	0801-002407	IC-CMOS LOGIC;74LCX08,AND GATE,SOIC,14P,	1	SA
....4	IC104	0801-002683	IC-CMOS LOGIC;74HCT245,TRANSCEIVER,TSSOP	1	SA
....4	IC104	0801-002709	IC-CMOS LOGIC;74HC373,D FLIP-FLOP,TSSOP,	1	SA
....4	IC104	0801-002709	IC-CMOS LOGIC;74HC373,D FLIP-FLOP,TSSOP,	1	SA
....4	IC107	1002-001227	IC-D/A CONVERTER;CS4340-KSR,24BIT,SOP,16	1	SA
....4	DU402	1006-001165	IC-LINE TRANSCEIVER;MAX3243CDBR,SSOP,28P	1	SA
....4	IC113	1105-001305	IC-DRAM;4S641632,-,64MBIT,1MX16X4BIT,TSO	1	SA
....4	IC113	1105-001308	IC-DRAM;K4S281632,128Mbit,8Mx16,TSOP,54P	1	SA
....4	DU701	1203-001824	IC-VOL. DETECTOR;7042,SOT-89,3P,-,PLASTI	1	SA
....4	T0087	1203-002842	IC-POSI.FIXED REG.;AP1117D-33A,TO-252,3P	1	SA
....4	DU101	1204-002400	IC-DECODER;STI5517SUA,PBGA,416P,27x27mm,	1	SA
....4	DR155	2007-000052	R-CHIP;10Kohm,1%,1/10W,TP,1608	1	SA
....4	DR156	2007-000052	R-CHIP;10Kohm,1%,1/10W,TP,1608	1	SA
....4	DR140	2007-000070	R-CHIP;0ohm,5%,1/10W,TP,1608	1	SA
....4	DR154	2007-000070	R-CHIP;0ohm,5%,1/10W,TP,1608	1	SA
....4	DR158	2007-000070	R-CHIP;0ohm,5%,1/10W,TP,1608	1	SA
....4	DR159	2007-000070	R-CHIP;0ohm,5%,1/10W,TP,1608	1	SA
....4	DR811	2007-000070	R-CHIP;0ohm,5%,1/10W,TP,1608	1	SA

ELECTRONIC SERVICE TIRGOVISTE

Level	Loc. No.	Code No.	Description & Specification	Q'ty	SA/SNA
....4	DR812	2007-000070	R-CHIP;0ohm,5%,1/10W,TP,1608	1	SA
....4	DR907	2007-000070	R-CHIP;0ohm,5%,1/10W,TP,1608	1	SA
....4	OR112	2007-000070	R-CHIP;0ohm,5%,1/10W,TP,1608	1	SA
....4	OR113	2007-000070	R-CHIP;0ohm,5%,1/10W,TP,1608	1	SA
....4	DR1102	2007-000072	R-CHIP;47ohm,5%,1/10W,TP,1608	1	SA
....4	DR111	2007-000072	R-CHIP;47ohm,5%,1/10W,TP,1608	1	SA
....4	DR116	2007-000072	R-CHIP;47ohm,5%,1/10W,TP,1608	1	SA
....4	DR169	2007-000072	R-CHIP;47ohm,5%,1/10W,TP,1608	1	SA
....4	DR170	2007-000072	R-CHIP;47ohm,5%,1/10W,TP,1608	1	SA
....4	DR174	2007-000072	R-CHIP;47ohm,5%,1/10W,TP,1608	1	SA
....4	DR176	2007-000072	R-CHIP;47ohm,5%,1/10W,TP,1608	1	SA
....4	DR182	2007-000072	R-CHIP;47ohm,5%,1/10W,TP,1608	1	SA
....4	DR183	2007-000072	R-CHIP;47ohm,5%,1/10W,TP,1608	1	SA
....4	DR184	2007-000072	R-CHIP;47ohm,5%,1/10W,TP,1608	1	SA
....4	DR185	2007-000072	R-CHIP;47ohm,5%,1/10W,TP,1608	1	SA
....4	DR186	2007-000072	R-CHIP;47ohm,5%,1/10W,TP,1608	1	SA
....4	DR187	2007-000072	R-CHIP;47ohm,5%,1/10W,TP,1608	1	SA
....4	DR195	2007-000072	R-CHIP;47ohm,5%,1/10W,TP,1608	1	SA
....4	DR196	2007-000072	R-CHIP;47ohm,5%,1/10W,TP,1608	1	SA
....4	DR197	2007-000072	R-CHIP;47ohm,5%,1/10W,TP,1608	1	SA
....4	DR198	2007-000072	R-CHIP;47ohm,5%,1/10W,TP,1608	1	SA
....4	DR199	2007-000072	R-CHIP;47ohm,5%,1/10W,TP,1608	1	SA
....4	DR202	2007-000072	R-CHIP;47ohm,5%,1/10W,TP,1608	1	SA
....4	DR203	2007-000072	R-CHIP;47ohm,5%,1/10W,TP,1608	1	SA
....4	DR204	2007-000072	R-CHIP;47ohm,5%,1/10W,TP,1608	1	SA
....4	DR501	2007-000072	R-CHIP;47ohm,5%,1/10W,TP,1608	1	SA
....4	DR902	2007-000072	R-CHIP;47ohm,5%,1/10W,TP,1608	1	SA
....4	DR905	2007-000072	R-CHIP;47ohm,5%,1/10W,TP,1608	1	SA
....4	DR906	2007-000072	R-CHIP;47ohm,5%,1/10W,TP,1608	1	SA
....4	DR916	2007-000072	R-CHIP;47ohm,5%,1/10W,TP,1608	1	SA
....4	DR917	2007-000072	R-CHIP;47ohm,5%,1/10W,TP,1608	1	SA
....4	DR923	2007-000072	R-CHIP;47ohm,5%,1/10W,TP,1608	1	SA
....4	DR104	2007-000074	R-CHIP;100ohm,5%,1/10W,TP,1608	1	SA
....4	DR105	2007-000074	R-CHIP;100ohm,5%,1/10W,TP,1608	1	SA
....4	DR1101	2007-000074	R-CHIP;100ohm,5%,1/10W,TP,1608	1	SA
....4	DR112	2007-000074	R-CHIP;100ohm,5%,1/10W,TP,1608	1	SA
....4	DR113	2007-000074	R-CHIP;100ohm,5%,1/10W,TP,1608	1	SA
....4	DR118	2007-000074	R-CHIP;100ohm,5%,1/10W,TP,1608	1	SA
....4	DR119	2007-000074	R-CHIP;100ohm,5%,1/10W,TP,1608	1	SA
....4	DR120	2007-000074	R-CHIP;100ohm,5%,1/10W,TP,1608	1	SA
....4	DR121	2007-000074	R-CHIP;100ohm,5%,1/10W,TP,1608	1	SA
....4	DR122	2007-000074	R-CHIP;100ohm,5%,1/10W,TP,1608	1	SA
....4	DR123	2007-000074	R-CHIP;100ohm,5%,1/10W,TP,1608	1	SA
....4	DR124	2007-000074	R-CHIP;100ohm,5%,1/10W,TP,1608	1	SA
....4	DR125	2007-000074	R-CHIP;100ohm,5%,1/10W,TP,1608	1	SA
....4	DR126	2007-000074	R-CHIP;100ohm,5%,1/10W,TP,1608	1	SA
....4	DR127	2007-000074	R-CHIP;100ohm,5%,1/10W,TP,1608	1	SA
....4	DR128	2007-000074	R-CHIP;100ohm,5%,1/10W,TP,1608	1	SA
....4	DR129	2007-000074	R-CHIP;100ohm,5%,1/10W,TP,1608	1	SA
....4	DR130	2007-000074	R-CHIP;100ohm,5%,1/10W,TP,1608	1	SA
....4	DR131	2007-000074	R-CHIP;100ohm,5%,1/10W,TP,1608	1	SA
....4	DR137	2007-000074	R-CHIP;100ohm,5%,1/10W,TP,1608	1	SA
....4	DR138	2007-000074	R-CHIP;100ohm,5%,1/10W,TP,1608	1	SA
....4	DR145	2007-000074	R-CHIP;100ohm,5%,1/10W,TP,1608	1	SA
....4	DR146	2007-000074	R-CHIP;100ohm,5%,1/10W,TP,1608	1	SA
....4	DR147	2007-000074	R-CHIP;100ohm,5%,1/10W,TP,1608	1	SA
....4	DR148	2007-000074	R-CHIP;100ohm,5%,1/10W,TP,1608	1	SA
....4	DR149	2007-000074	R-CHIP;100ohm,5%,1/10W,TP,1608	1	SA
....4	DR150	2007-000074	R-CHIP;100ohm,5%,1/10W,TP,1608	1	SA
....4	DR151	2007-000074	R-CHIP;100ohm,5%,1/10W,TP,1608	1	SA

ELECTRONIC SERVICE TIRGOVISTE

Level	Loc. No.	Code No.	Description & Specification	Q'ty	SA/SNA
....4	DR152	2007-000074	R-CHIP;100ohm,5%,1/10W,TP,1608	1	SA
....4	DR160	2007-000074	R-CHIP;100ohm,5%,1/10W,TP,1608	1	SA
....4	DR161	2007-000074	R-CHIP;100ohm,5%,1/10W,TP,1608	1	SA
....4	DR166	2007-000074	R-CHIP;100ohm,5%,1/10W,TP,1608	1	SA
....4	DR171	2007-000074	R-CHIP;100ohm,5%,1/10W,TP,1608	1	SA
....4	DR172	2007-000074	R-CHIP;100ohm,5%,1/10W,TP,1608	1	SA
....4	DR175	2007-000074	R-CHIP;100ohm,5%,1/10W,TP,1608	1	SA
....4	DR180	2007-000074	R-CHIP;100ohm,5%,1/10W,TP,1608	1	SA
....4	DR181	2007-000074	R-CHIP;100ohm,5%,1/10W,TP,1608	1	SA
....4	DR200	2007-000074	R-CHIP;100ohm,5%,1/10W,TP,1608	1	SA
....4	DR201	2007-000074	R-CHIP;100ohm,5%,1/10W,TP,1608	1	SA
....4	DR221	2007-000074	R-CHIP;100ohm,5%,1/10W,TP,1608	1	SA
....4	DR400	2007-000074	R-CHIP;100ohm,5%,1/10W,TP,1608	1	SA
....4	DR401	2007-000074	R-CHIP;100ohm,5%,1/10W,TP,1608	1	SA
....4	DR402	2007-000074	R-CHIP;100ohm,5%,1/10W,TP,1608	1	SA
....4	DR403	2007-000074	R-CHIP;100ohm,5%,1/10W,TP,1608	1	SA
....4	DR404	2007-000074	R-CHIP;100ohm,5%,1/10W,TP,1608	1	SA
....4	DR405	2007-000074	R-CHIP;100ohm,5%,1/10W,TP,1608	1	SA
....4	DR406	2007-000074	R-CHIP;100ohm,5%,1/10W,TP,1608	1	SA
....4	DR407	2007-000074	R-CHIP;100ohm,5%,1/10W,TP,1608	1	SA
....4	DR419	2007-000074	R-CHIP;100ohm,5%,1/10W,TP,1608	1	SA
....4	DR704	2007-000074	R-CHIP;100ohm,5%,1/10W,TP,1608	1	SA
....4	DR162	2007-000076	R-CHIP;330ohm,5%,1/10W,TP,1608	1	SA
....4	DR163	2007-000076	R-CHIP;330ohm,5%,1/10W,TP,1608	1	SA
....4	DR164	2007-000076	R-CHIP;330ohm,5%,1/10W,TP,1608	1	SA
....4	DR165	2007-000076	R-CHIP;330ohm,5%,1/10W,TP,1608	1	SA
....4	DR502	2007-000078	R-CHIP;1Kohm,5%,1/10W,TP,1608	1	SA
....4	DR503	2007-000078	R-CHIP;1Kohm,5%,1/10W,TP,1608	1	SA
....4	DR505	2007-000078	R-CHIP;1Kohm,5%,1/10W,TP,1608	1	SA
....4	DR702	2007-000078	R-CHIP;1Kohm,5%,1/10W,TP,1608	1	SA
....4	DR114	2007-000084	R-CHIP;4.7Kohm,5%,1/10W,TP,1608	1	SA
....4	DR139	2007-000084	R-CHIP;4.7Kohm,5%,1/10W,TP,1608	1	SA
....4	DR141	2007-000084	R-CHIP;4.7Kohm,5%,1/10W,TP,1608	1	SA
....4	DR142	2007-000084	R-CHIP;4.7Kohm,5%,1/10W,TP,1608	1	SA
....4	DR143	2007-000084	R-CHIP;4.7Kohm,5%,1/10W,TP,1608	1	SA
....4	DR144	2007-000084	R-CHIP;4.7Kohm,5%,1/10W,TP,1608	1	SA
....4	DR153	2007-000084	R-CHIP;4.7Kohm,5%,1/10W,TP,1608	1	SA
....4	DR417	2007-000084	R-CHIP;4.7Kohm,5%,1/10W,TP,1608	1	SA
....4	DR418	2007-000084	R-CHIP;4.7Kohm,5%,1/10W,TP,1608	1	SA
....4	DR701	2007-000084	R-CHIP;4.7Kohm,5%,1/10W,TP,1608	1	SA
....4	DR703	2007-000084	R-CHIP;4.7Kohm,5%,1/10W,TP,1608	1	SA
....4	DR705	2007-000084	R-CHIP;4.7Kohm,5%,1/10W,TP,1608	1	SA
....4	DR707	2007-000084	R-CHIP;4.7Kohm,5%,1/10W,TP,1608	1	SA
....4	DR117	2007-000090	R-CHIP;10Kohm,5%,1/10W,TP,1608	1	SA
....4	DR177	2007-000090	R-CHIP;10Kohm,5%,1/10W,TP,1608	1	SA
....4	DR178	2007-000090	R-CHIP;10Kohm,5%,1/10W,TP,1608	1	SA
....4	DR179	2007-000090	R-CHIP;10Kohm,5%,1/10W,TP,1608	1	SA
....4	DR188	2007-000090	R-CHIP;10Kohm,5%,1/10W,TP,1608	1	SA
....4	DR189	2007-000090	R-CHIP;10Kohm,5%,1/10W,TP,1608	1	SA
....4	DR190	2007-000090	R-CHIP;10Kohm,5%,1/10W,TP,1608	1	SA
....4	DR191	2007-000090	R-CHIP;10Kohm,5%,1/10W,TP,1608	1	SA
....4	DR192	2007-000090	R-CHIP;10Kohm,5%,1/10W,TP,1608	1	SA
....4	DR193	2007-000090	R-CHIP;10Kohm,5%,1/10W,TP,1608	1	SA
....4	DR194	2007-000090	R-CHIP;10Kohm,5%,1/10W,TP,1608	1	SA
....4	DR416	2007-000090	R-CHIP;10Kohm,5%,1/10W,TP,1608	1	SA
....4	DR423	2007-000090	R-CHIP;10Kohm,5%,1/10W,TP,1608	1	SA
....4	DR424	2007-000090	R-CHIP;10Kohm,5%,1/10W,TP,1608	1	SA
....4	DR632	2007-000090	R-CHIP;10Kohm,5%,1/10W,TP,1608	1	SA
....4	DR633	2007-000090	R-CHIP;10Kohm,5%,1/10W,TP,1608	1	SA
....4	DR901	2007-000090	R-CHIP;10Kohm,5%,1/10W,TP,1608	1	SA

ELECTRONIC SERVICE TARGOVISTE

Level	Loc. No.	Code No.	Description & Specification	Q'ty	SA/SNA
....4	DR903	2007-000090	R-CHIP;10Kohm,5%,1/10W,TP,1608	1	SA
....4	DR904	2007-000090	R-CHIP;10Kohm,5%,1/10W,TP,1608	1	SA
....4	DR918	2007-000090	R-CHIP;10Kohm,5%,1/10W,TP,1608	1	SA
....4	DR919	2007-000090	R-CHIP;10Kohm,5%,1/10W,TP,1608	1	SA
....4	DR920	2007-000090	R-CHIP;10Kohm,5%,1/10W,TP,1608	1	SA
....4	DR921	2007-000090	R-CHIP;10Kohm,5%,1/10W,TP,1608	1	SA
....4	DR922	2007-000090	R-CHIP;10Kohm,5%,1/10W,TP,1608	1	SA
....4	DR700	2007-000097	R-CHIP;47Kohm,5%,1/10W,TP,1608	1	SA
....4	DR706	2007-000097	R-CHIP;47Kohm,5%,1/10W,TP,1608	1	SA
....4	DR102	2007-000102	R-CHIP;100Kohm,5%,1/10W,TP,1608	1	SA
....4	DR408	2007-000113	R-CHIP;33ohm,5%,1/10W,TP,1608	1	SA
....4	DR409	2007-000113	R-CHIP;33ohm,5%,1/10W,TP,1608	1	SA
....4	DR410	2007-000113	R-CHIP;33ohm,5%,1/10W,TP,1608	1	SA
....4	DR411	2007-000113	R-CHIP;33ohm,5%,1/10W,TP,1608	1	SA
....4	DR412	2007-000113	R-CHIP;33ohm,5%,1/10W,TP,1608	1	SA
....4	DR413	2007-000113	R-CHIP;33ohm,5%,1/10W,TP,1608	1	SA
....4	DR414	2007-000113	R-CHIP;33ohm,5%,1/10W,TP,1608	1	SA
....4	DR415	2007-000113	R-CHIP;33ohm,5%,1/10W,TP,1608	1	SA
....4	DR601	2007-000113	R-CHIP;33ohm,5%,1/10W,TP,1608	1	SA
....4	DR908	2007-000113	R-CHIP;33ohm,5%,1/10W,TP,1608	1	SA
....4	DR909	2007-000113	R-CHIP;33ohm,5%,1/10W,TP,1608	1	SA
....4	DR910	2007-000113	R-CHIP;33ohm,5%,1/10W,TP,1608	1	SA
....4	DR911	2007-000113	R-CHIP;33ohm,5%,1/10W,TP,1608	1	SA
....4	DR912	2007-000113	R-CHIP;33ohm,5%,1/10W,TP,1608	1	SA
....4	DR913	2007-000113	R-CHIP;33ohm,5%,1/10W,TP,1608	1	SA
....4	DR914	2007-000113	R-CHIP;33ohm,5%,1/10W,TP,1608	1	SA
....4	DR915	2007-000113	R-CHIP;33ohm,5%,1/10W,TP,1608	1	SA
....4	DR999	2007-000113	R-CHIP;33ohm,5%,1/10W,TP,1608	1	SA
....4	DR101	2007-000119	R-CHIP;560ohm,5%,1/10W,TP,1608	1	SA
....4	DR173	2007-000372	R-CHIP;130ohm,5%,1/10W,TP,1608	1	SA
....4	DR205	2007-000372	R-CHIP;130ohm,5%,1/10W,TP,1608	1	SA
....4	DR132	2007-000539	R-CHIP;200ohm,5%,1/10W,TP,1608	1	SA
....4	DR133	2007-000539	R-CHIP;200ohm,5%,1/10W,TP,1608	1	SA
....4	DR134	2007-000539	R-CHIP;200ohm,5%,1/10W,TP,1608	1	SA
....4	DR135	2007-000539	R-CHIP;200ohm,5%,1/10W,TP,1608	1	SA
....4	DR167	2007-000539	R-CHIP;200ohm,5%,1/10W,TP,1608	1	SA
....4	DR800	2007-000763	R-CHIP;330ohm,1%,1/10W,TP,1608	1	SA
....4	DR801	2007-000763	R-CHIP;330ohm,1%,1/10W,TP,1608	1	SA
....4	DR802	2007-000763	R-CHIP;330ohm,1%,1/10W,TP,1608	1	SA
....4	DR803	2007-000763	R-CHIP;330ohm,1%,1/10W,TP,1608	1	SA
....4	DR804	2007-000763	R-CHIP;330ohm,1%,1/10W,TP,1608	1	SA
....4	DR805	2007-000763	R-CHIP;330ohm,1%,1/10W,TP,1608	1	SA
....4	DR806	2007-000763	R-CHIP;330ohm,1%,1/10W,TP,1608	1	SA
....4	DR807	2007-000763	R-CHIP;330ohm,1%,1/10W,TP,1608	1	SA
....4	DR420	2007-001167	R-CHIP;75ohm,5%,1/10W,TP,1608	1	SA
....4	DR421	2007-001167	R-CHIP;75ohm,5%,1/10W,TP,1608	1	SA
....4	DRA103	2011-001011	R-NET;10Kohm,5%,1/16W,L,CHIP,8P,TP,3.2x1	1	SA
....4	DRA401	2011-001011	R-NET;10Kohm,5%,1/16W,L,CHIP,8P,TP,3.2x1	1	SA
....4	DRA108	2011-001410	R-NET;120OHM,5%,1/16W,L,CHIP,8P,TP,3.2X1	1	SA
....4	DRA109	2011-001410	R-NET;120OHM,5%,1/16W,L,CHIP,8P,TP,3.2X1	1	SA
....4	DRA110	2011-001410	R-NET;120OHM,5%,1/16W,L,CHIP,8P,TP,3.2X1	1	SA
....4	DRA111	2011-001410	R-NET;120OHM,5%,1/16W,L,CHIP,8P,TP,3.2X1	1	SA
....4	DRA112	2011-001410	R-NET;120OHM,5%,1/16W,L,CHIP,8P,TP,3.2X1	1	SA
....4	DRA113	2011-001410	R-NET;120OHM,5%,1/16W,L,CHIP,8P,TP,3.2X1	1	SA
....4	DRA114	2011-001410	R-NET;120OHM,5%,1/16W,L,CHIP,8P,TP,3.2X1	1	SA
....4	DRA115	2011-001410	R-NET;120OHM,5%,1/16W,L,CHIP,8P,TP,3.2X1	1	SA
....4	DRA116	2011-001410	R-NET;120OHM,5%,1/16W,L,CHIP,8P,TP,3.2X1	1	SA
....4	DRA117	2011-001410	R-NET;120OHM,5%,1/16W,L,CHIP,8P,TP,3.2X1	1	SA
....4	DRA118	2011-001410	R-NET;120OHM,5%,1/16W,L,CHIP,8P,TP,3.2X1	1	SA
....4	DRA119	2011-001410	R-NET;120OHM,5%,1/16W,L,CHIP,8P,TP,3.2X1	1	SA

ELECTRONIC SERVICE TIRGOVISTE

Level	Loc. No.	Code No.	Description & Specification	Q'ty	SA/SNA
....4	DRA120	2011-001410	R-NET;120OHM,5%,1/16W,L,CHIP,8P,TP,3.2X1	1	SA
....4	DRA121	2011-001410	R-NET;120OHM,5%,1/16W,L,CHIP,8P,TP,3.2X1	1	SA
....4	DRA122	2011-001410	R-NET;120OHM,5%,1/16W,L,CHIP,8P,TP,3.2X1	1	SA
....4	DRA123	2011-001410	R-NET;120OHM,5%,1/16W,L,CHIP,8P,TP,3.2X1	1	SA
....4	DRA124	2011-001410	R-NET;120OHM,5%,1/16W,L,CHIP,8P,TP,3.2X1	1	SA
....4	DRA125	2011-001410	R-NET;120OHM,5%,1/16W,L,CHIP,8P,TP,3.2X1	1	SA
....4	DC100	2203-000257	C-CER,CHIP;10nF,10%,50V,X7R,1608	1	SA
....4	DC102	2203-000257	C-CER,CHIP;10nF,10%,50V,X7R,1608	1	SA
....4	DC105	2203-000257	C-CER,CHIP;10nF,10%,50V,X7R,1608	1	SA
....4	DC107	2203-000257	C-CER,CHIP;10nF,10%,50V,X7R,1608	1	SA
....4	DC109	2203-000257	C-CER,CHIP;10nF,10%,50V,X7R,1608	1	SA
....4	DC111	2203-000257	C-CER,CHIP;10nF,10%,50V,X7R,1608	1	SA
....4	DC112	2203-000257	C-CER,CHIP;10nF,10%,50V,X7R,1608	1	SA
....4	DC114	2203-000257	C-CER,CHIP;10nF,10%,50V,X7R,1608	1	SA
....4	DC116	2203-000257	C-CER,CHIP;10nF,10%,50V,X7R,1608	1	SA
....4	DC118	2203-000257	C-CER,CHIP;10nF,10%,50V,X7R,1608	1	SA
....4	DC801	2203-000659	C-CER,CHIP;0.27nF,5%,50V,C0G,1608	1	SA
....4	DC804	2203-000659	C-CER,CHIP;0.27nF,5%,50V,C0G,1608	1	SA
....4	DC807	2203-000659	C-CER,CHIP;0.27nF,5%,50V,C0G,1608	1	SA
....4	DC810	2203-000659	C-CER,CHIP;0.27nF,5%,50V,C0G,1608	1	SA
....4	DC155	2203-001630	C-CER,CHIP;330nF,+80-20%,16V,Y5V,1608	1	SA
....4	DC700	2203-001630	C-CER,CHIP;330nF,+80-20%,16V,Y5V,1608	1	SA
....4	DC701	2203-001630	C-CER,CHIP;330nF,+80-20%,16V,Y5V,1608	1	SA
....4	DC101	2203-005005	C-CER,CHIP;100nF,10%,16V,X7R,1608	1	SA
....4	DC103	2203-005005	C-CER,CHIP;100nF,10%,16V,X7R,1608	1	SA
....4	DC104	2203-005005	C-CER,CHIP;100nF,10%,16V,X7R,1608	1	SA
....4	DC106	2203-005005	C-CER,CHIP;100nF,10%,16V,X7R,1608	1	SA
....4	DC108	2203-005005	C-CER,CHIP;100nF,10%,16V,X7R,1608	1	SA
....4	DC110	2203-005005	C-CER,CHIP;100nF,10%,16V,X7R,1608	1	SA
....4	DC113	2203-005005	C-CER,CHIP;100nF,10%,16V,X7R,1608	1	SA
....4	DC115	2203-005005	C-CER,CHIP;100nF,10%,16V,X7R,1608	1	SA
....4	DC117	2203-005005	C-CER,CHIP;100nF,10%,16V,X7R,1608	1	SA
....4	DC119	2203-005005	C-CER,CHIP;100nF,10%,16V,X7R,1608	1	SA
....4	DC120	2203-005005	C-CER,CHIP;100nF,10%,16V,X7R,1608	1	SA
....4	DC126	2203-005005	C-CER,CHIP;100nF,10%,16V,X7R,1608	1	SA
....4	DC127	2203-005005	C-CER,CHIP;100nF,10%,16V,X7R,1608	1	SA
....4	DC128	2203-005005	C-CER,CHIP;100nF,10%,16V,X7R,1608	1	SA
....4	DC129	2203-005005	C-CER,CHIP;100nF,10%,16V,X7R,1608	1	SA
....4	DC130	2203-005005	C-CER,CHIP;100nF,10%,16V,X7R,1608	1	SA
....4	DC131	2203-005005	C-CER,CHIP;100nF,10%,16V,X7R,1608	1	SA
....4	DC132	2203-005005	C-CER,CHIP;100nF,10%,16V,X7R,1608	1	SA
....4	DC133	2203-005005	C-CER,CHIP;100nF,10%,16V,X7R,1608	1	SA
....4	DC134	2203-005005	C-CER,CHIP;100nF,10%,16V,X7R,1608	1	SA
....4	DC135	2203-005005	C-CER,CHIP;100nF,10%,16V,X7R,1608	1	SA
....4	DC136	2203-005005	C-CER,CHIP;100nF,10%,16V,X7R,1608	1	SA
....4	DC137	2203-005005	C-CER,CHIP;100nF,10%,16V,X7R,1608	1	SA
....4	DC138	2203-005005	C-CER,CHIP;100nF,10%,16V,X7R,1608	1	SA
....4	DC139	2203-005005	C-CER,CHIP;100nF,10%,16V,X7R,1608	1	SA
....4	DC140	2203-005005	C-CER,CHIP;100nF,10%,16V,X7R,1608	1	SA
....4	DC141	2203-005005	C-CER,CHIP;100nF,10%,16V,X7R,1608	1	SA
....4	DC142	2203-005005	C-CER,CHIP;100nF,10%,16V,X7R,1608	1	SA
....4	DC143	2203-005005	C-CER,CHIP;100nF,10%,16V,X7R,1608	1	SA
....4	DC144	2203-005005	C-CER,CHIP;100nF,10%,16V,X7R,1608	1	SA
....4	DC145	2203-005005	C-CER,CHIP;100nF,10%,16V,X7R,1608	1	SA
....4	DC146	2203-005005	C-CER,CHIP;100nF,10%,16V,X7R,1608	1	SA
....4	DC147	2203-005005	C-CER,CHIP;100nF,10%,16V,X7R,1608	1	SA
....4	DC148	2203-005005	C-CER,CHIP;100nF,10%,16V,X7R,1608	1	SA
....4	DC149	2203-005005	C-CER,CHIP;100nF,10%,16V,X7R,1608	1	SA
....4	DC150	2203-005005	C-CER,CHIP;100nF,10%,16V,X7R,1608	1	SA
....4	DC151	2203-005005	C-CER,CHIP;100nF,10%,16V,X7R,1608	1	SA

ELECTRONIC SERVICE TIRGOVISTE

Level	Loc. No.	Code No.	Description & Specification	Q'ty	SA/SNA
....4	DC152	2203-005005	C-CER,CHIP;100nF,10%,16V,X7R,1608	1	SA
....4	DC153	2203-005005	C-CER,CHIP;100nF,10%,16V,X7R,1608	1	SA
....4	DC203	2203-005005	C-CER,CHIP;100nF,10%,16V,X7R,1608	1	SA
....4	DC400	2203-005005	C-CER,CHIP;100nF,10%,16V,X7R,1608	1	SA
....4	DC401	2203-005005	C-CER,CHIP;100nF,10%,16V,X7R,1608	1	SA
....4	DC402	2203-005005	C-CER,CHIP;100nF,10%,16V,X7R,1608	1	SA
....4	DC403	2203-005005	C-CER,CHIP;100nF,10%,16V,X7R,1608	1	SA
....4	DC404	2203-005005	C-CER,CHIP;100nF,10%,16V,X7R,1608	1	SA
....4	DC500	2203-005005	C-CER,CHIP;100nF,10%,16V,X7R,1608	1	SA
....4	DC501	2203-005005	C-CER,CHIP;100nF,10%,16V,X7R,1608	1	SA
....4	DC502	2203-005005	C-CER,CHIP;100nF,10%,16V,X7R,1608	1	SA
....4	DC503	2203-005005	C-CER,CHIP;100nF,10%,16V,X7R,1608	1	SA
....4	DC504	2203-005005	C-CER,CHIP;100nF,10%,16V,X7R,1608	1	SA
....4	DC505	2203-005005	C-CER,CHIP;100nF,10%,16V,X7R,1608	1	SA
....4	DC506	2203-005005	C-CER,CHIP;100nF,10%,16V,X7R,1608	1	SA
....4	DC507	2203-005005	C-CER,CHIP;100nF,10%,16V,X7R,1608	1	SA
....4	DC508	2203-005005	C-CER,CHIP;100nF,10%,16V,X7R,1608	1	SA
....4	DC509	2203-005005	C-CER,CHIP;100nF,10%,16V,X7R,1608	1	SA
....4	DC510	2203-005005	C-CER,CHIP;100nF,10%,16V,X7R,1608	1	SA
....4	DC511	2203-005005	C-CER,CHIP;100nF,10%,16V,X7R,1608	1	SA
....4	DC512	2203-005005	C-CER,CHIP;100nF,10%,16V,X7R,1608	1	SA
....4	DC513	2203-005005	C-CER,CHIP;100nF,10%,16V,X7R,1608	1	SA
....4	DC514	2203-005005	C-CER,CHIP;100nF,10%,16V,X7R,1608	1	SA
....4	DC601	2203-005005	C-CER,CHIP;100nF,10%,16V,X7R,1608	1	SA
....4	DC612	2203-005005	C-CER,CHIP;100nF,10%,16V,X7R,1608	1	SA
....4	DC614	2203-005005	C-CER,CHIP;100nF,10%,16V,X7R,1608	1	SA
....4	DC631	2203-005005	C-CER,CHIP;100nF,10%,16V,X7R,1608	1	SA
....4	DC632	2203-005005	C-CER,CHIP;100nF,10%,16V,X7R,1608	1	SA
....4	DC633	2203-005005	C-CER,CHIP;100nF,10%,16V,X7R,1608	1	SA
....4	DC902	2203-005005	C-CER,CHIP;100nF,10%,16V,X7R,1608	1	SA
....4	DC903	2203-005005	C-CER,CHIP;100nF,10%,16V,X7R,1608	1	SA
....4	DC905	2203-005005	C-CER,CHIP;100nF,10%,16V,X7R,1608	1	SA
....4	DC906	2203-005005	C-CER,CHIP;100nF,10%,16V,X7R,1608	1	SA
....4	DC907	2203-005005	C-CER,CHIP;100nF,10%,16V,X7R,1608	1	SA
....4	DC909	2203-005005	C-CER,CHIP;100nF,10%,16V,X7R,1608	1	SA
....4	DC910	2203-005005	C-CER,CHIP;100nF,10%,16V,X7R,1608	1	SA
....4	DC915	2203-005005	C-CER,CHIP;100nF,10%,16V,X7R,1608	1	SA
....4	DC916	2203-005005	C-CER,CHIP;100nF,10%,16V,X7R,1608	1	SA
....4	DC921	2203-005005	C-CER,CHIP;100nF,10%,16V,X7R,1608	1	SA
....4	DC922	2203-005005	C-CER,CHIP;100nF,10%,16V,X7R,1608	1	SA
....4	DC9906	2203-005005	C-CER,CHIP;100nF,10%,16V,X7R,1608	1	SA
....4	DC121	2402-000108	C-AL,SMD;10uF,20%,16V,WT,TP,4.3x4.3x5.2m	1	SA
....4	DC122	2402-000108	C-AL,SMD;10uF,20%,16V,WT,TP,4.3x4.3x5.2m	1	SA
....4	DC123	2402-000108	C-AL,SMD;10uF,20%,16V,WT,TP,4.3x4.3x5.2m	1	SA
....4	DC124	2402-000108	C-AL,SMD;10uF,20%,16V,WT,TP,4.3x4.3x5.2m	1	SA
....4	DC125	2402-000108	C-AL,SMD;10uF,20%,16V,WT,TP,4.3x4.3x5.2m	1	SA
....4	DC602	2402-000108	C-AL,SMD;10uF,20%,16V,WT,TP,4.3x4.3x5.2m	1	SA
....4	DC154	2402-001128	C-AL,SMD;100UF,20%,16V,WT,TP,6.3X5.7MM	1	SA
....4	DC522	2402-001128	C-AL,SMD;100UF,20%,16V,WT,TP,6.3X5.7MM	1	SA
....4	DC611	2402-001128	C-AL,SMD;100UF,20%,16V,WT,TP,6.3X5.7MM	1	SA
....4	DC634	2402-001128	C-AL,SMD;100UF,20%,16V,WT,TP,6.3X5.7MM	1	SA
....4	DC901	2402-001128	C-AL,SMD;100UF,20%,16V,WT,TP,6.3X5.7MM	1	SA
....4	DC904	2402-001128	C-AL,SMD;100UF,20%,16V,WT,TP,6.3X5.7MM	1	SA
....4	DC635	2402-001158	C-AL,SMD;1UF,20%,50V,WT,TP,4X5.2MM	1	SA
....4	DC636	2402-001158	C-AL,SMD;1UF,20%,50V,WT,TP,4X5.2MM	1	SA
....4	DC637	2402-001159	C-AL,SMD;3.3UF,20%,50V,WT,TP,4X5.2MM	1	SA
....4	DC638	2402-001159	C-AL,SMD;3.3UF,20%,50V,WT,TP,4X5.2MM	1	SA
....4	DC202	2402-001216	C-AL,SMD;470uF,20%,16V,WT,TP,10.3x10.3x1	1	SA
....4	DC613	2402-001216	C-AL,SMD;470uF,20%,16V,WT,TP,10.3x10.3x1	1	SA
....4	T0052	2703-000125	INDUCTOR-SMD;10uH,10%,2012	1	SA

ELECTRONIC SERVICE TIRGOVISTE

Level	Loc. No.	Code No.	Description & Specification	Q'ty	SA/SNA
....4	T0052	2703-000125	INDUCTOR-SMD;10uH,10%,2012	1	SA
....4	T0052	2703-000125	INDUCTOR-SMD;10uH,10%,2012	1	SA
....4	T0052	2703-000125	INDUCTOR-SMD;10uH,10%,2012	1	SA
....4	DX601	2806-001308	OSCILLATOR-VCXO;27MHZ,-,30PF,TP,3.3V,50M	1	SA
....4	T0568	3301-001569	BEAD-SMD;600ohm,2012,1000mA,TP,520ohm/90	1	SNA
....4	T0568	3301-001569	BEAD-SMD;600ohm,2012,1000mA,TP,520ohm/90	1	SNA
....4	T0568	3301-001569	BEAD-SMD;600ohm,2012,1000mA,TP,520ohm/90	1	SNA
....4	T0568	3301-001569	BEAD-SMD;600ohm,2012,1000mA,TP,520ohm/90	1	SNA
....4	T0568	3301-001569	BEAD-SMD;600ohm,2012,1000mA,TP,520ohm/90	1	SNA
....4	T0568	3301-001569	BEAD-SMD;600ohm,2012,1000mA,TP,520ohm/90	1	SNA
....4	T0568	3301-001569	BEAD-SMD;600ohm,2012,1000mA,TP,520ohm/90	1	SNA
....4	T0568	3301-001569	BEAD-SMD;600ohm,2012,1000mA,TP,520ohm/90	1	SNA
....4	MP1.1	BN41-00684A	PCB-DIGITAL B/D;BORDEAUX,FR-4,6L,1.0,1.6	1	SNA
....4	M0018	BN97-00805L	ASSY MICOM;T-XXXX-XXXX,DTV MODULE,XEF,20	1	SA
.....5	IC115	1107-001475	IC-FLASH MEMORY;29LV320,32MBIT,4MX8/2MX1	1	SA
....4	IC104	0801-002172	IC-CMOS LOGIC;74LCX16244,BUFFER/LINE DRI	1	SA
....4	T0087	1203-003704	IC-POSI.FIXED REG.;G953-18T6U,SOT-223,3P	1	SA
1		BN91-01017F	ASSY LCD-SPB;LE32R71B,32",BORDEAUX,AM LC	1	SNA
..2	M0215	BN07-00247A	LCD-PANEL;LTA320WT-L14,-,8BIT,760*450*50	1	SA
1	M0045	BN92-01661M	ASSY ACCESSORY;LE26R73BDX/XEF	1	SNA
..2	M0045	BN96-02984M	ASSY ACCESSORY;LE26R73BDX/XEF	1	SA
...3	T0268	3903-000145	CBF-POWER CORD;DT,EU,FP3/YES,U(IEC C13-R	1	SA
...3	T0524	6902-000110	BAG PE;LDPE,T0.05,W250,L400,TRP,28,2	2	SNA
...3	ACCESSORY	AA68-03242E	MANUAL FLYER-01,SAFETY GUIDE;All Model,S	1	SNA
...3	ACCESSORY	AA68-03575C	MANUAL FLYER-01,REGISTRATION C;XEF,FRENC	1	SNA
...3	T0074	BN59-00516A	REMOCON;CAMBRIDGE,TM87B,45,CAMBRIDGE,EUR	1	SA
...3	ACCESSORY	BN63-01798A	CLOTH-CLEAN;RE40**,CLOTH,310,320,RHCM	1	SA
...3	T0531	BN63-02323A	COVER-BOTTOM;23,26,32R71,ABS+PMMA,HB,BK2	1	SA
...3	ACCESSORY	BN68-00514A	MANUAL FLYER-04,WARRANTY CARD;PDP/LCD TV	1	SNA
...3	T0059	BN68-00895A	MANUAL FLYER-CARD;COMM,SAMSUNG,W/P 5G,PR	1	SNA
...3	T0059	BN68-00907A	MANUAL FLYER-CARD;COMM,SAMSUNG,18 LANG,E	1	SNA
...3	T0511	BN68-01007C	MANUAL USERS;COMM,SAMSUNG,Eng/Fre,France	1	SNA
...3	ACCESSORY	BN69-01086A	BOX ACCESSORY-00;COMM,SW1,YEL,-,W573,D63	1	SNA
...3	M0045	BN96-01800A	ASSY ACCESSORY;ROME32,SCREW	1	SA
....4	T0081	6002-001294	SCREW-TAPPING;BH,+,,M4,L16,ZPC(BLK)	4	SA
....4	ACCESSORY	6902-000128	BAG ZIPPER;LDPE,T0.05,W200,L150,TRP,8,2-	1	SNA
1	M0113	BN92-01664A	ASSY P/MATERIAL;32R71,BORDEAUX	1	SNA
..2	T0376	6902-000061	BAG AIR;LDPE,T0.2,L1000,W500,TRP,,,	0.035	SNA
..2	T0376	6902-000379	BAG AIR;LDPE,T0.2,W1000,L1800,TRP,-,--	0.006	SNA
..2		6902-000604	BAG WRAPPING;LDPE,T0.02,W500,L10000,TRP,	6.45	SNA
..2	T0524	6902-000715	BAG PE;HDPE/NITRON,T0.015/T0.5,W1000,L10	1	SNA
1	M0003	BN92-01708C	ASSY BOX;32R74,EO(XEF,XEG),CAMBRIDGE-2	1	SNA
..2		BN69-01345C	BOX-01,SET;32R74,DY-01,AB,YEL,A1,IDTV(GE	1.02	SA
1	M0112	BN91-01007Y	ASSY SHIELD;32R74,AMLCD	1	SNA
..2	M0081	6003-000115	SCREW-TAPTITE;BH,+,B,M3,L6,ZPC(BLK),SWRC	2	SNA
..2	M0081	6003-000115	SCREW-TAPTITE;BH,+,B,M3,L6,ZPC(BLK),SWRC	4	SNA
..2	M0081	6003-000115	SCREW-TAPTITE;BH,+,B,M3,L6,ZPC(BLK),SWRC	4	SNA
..2	M0081	6003-000115	SCREW-TAPTITE;BH,+,B,M3,L6,ZPC(BLK),SWRC	3	SNA
..2	M0081	6003-000115	SCREW-TAPTITE;BH,+,B,M3,L6,ZPC(BLK),SWRC	2	SNA
..2	M0081	6003-000115	SCREW-TAPTITE;BH,+,B,M3,L6,ZPC(BLK),SWRC	1	SNA
..2	M0081	6003-001003	SCREW-TAPTITE;BH,+,B,M4,L12,ZPC(BLK),SWR	2	SNA
..2	M0081	6003-001003	SCREW-TAPTITE;BH,+,B,M4,L12,ZPC(BLK),SWR	2	SNA
..2	M0081	6003-001003	SCREW-TAPTITE;BH,+,B,M4,L12,ZPC(BLK),SWR	8	SNA
..2	M0081	6003-001003	SCREW-TAPTITE;BH,+,B,M4,L12,ZPC(BLK),SWR	2	SNA
..2	M0081	6003-001003	SCREW-TAPTITE;BH,+,B,M4,L12,ZPC(BLK),SWR	1	SNA

ELECTRONIC SERVICE TIRGOVISTE

Level	Loc. No.	Code No.	Description & Specification	Q'ty	SA/SNA
..2	M0081	6003-001003	SCREW-TAPTITE;BH,+,B,M4,L12,ZPC(BLK),SWR	1	SNA
..2	CCM1	6006-000245	SCREW-MACHINE;WSP,PH,+,M4,L8,ZPC(YEL),SW	4	SNA
..2	CCM1	6006-000245	SCREW-MACHINE;WSP,PH,+,M4,L8,ZPC(YEL),SW	1	SNA
..2	M2893	BH39-00362G	LEAD CONNECTOR;SONOMA,UL1007#26,5PIN,100	1	SA
..2	M2893	BN39-00603M	LEAD CONNECTOR;LE40R73BDX,UL1007#26,14P,	1	SA
..2	T0076	BN39-00615D	CBF HARNESS;BORDEAUX,1617#22,3P,1P,RING,	1	SA
..2	M2893	BN39-00691A	LEAD CONNECTOR;Torino-32,UL1007#26,16P,1	1	SA
..2	M2893	BN39-00712C	LEAD CONNECTOR-LVDS;Bordeaux,UL1571#30,3	1	SA
..2		BN61-02196A	BRACKET-PANEL SIDE;Bordeaux 32,SECC,T1.2	1	SA
..2		BN61-02197A	BRACKET-PANEL SIDE;Bordeaux 32,SECC,T1.2	1	SA
..2		BN61-02201A	BRACKET-STAND LINK;Bordeaux 32,SECC,T1.6	1	SA
..2	M0114	BN61-02500A	HOLDER-WIRE;NYLON6.6,NATURAL	2	SA
..2	M0146	BN63-02462A	SHIELD CASE;CAMBRIDGE 32,SECC,T0.8,UK	1	SA
..2		BN96-03006A	ASSY BOARD P-HOLDER AV;32R71,EO,ABS+PMMA	1	SNA
...3		BN61-02193A	HOLDER-SIDE AV;32R71,EO,KO,SO,ABS+PMMA,H	1	SA
...3	T0578	BN64-00454A	INLAY AV;BORDEAUX,PS SHEET,T0.3,-,-,-,EO	1	SNA
...3	M0020	BN96-02439A	ASSY BOARD P-SUB AV SIDE;MILANO,CT5000-3	1	SA
...3	M2893	BN39-00672A	LEAD CONNECTOR;LNR329DX/XAA,UL2835#28,UL	1	SA
..2	T0159	BN96-03057A	ASSY PCB P-SMPS;Bordeaux 32 PFC,LE32R71B	1	SA
..2	T0447	BN96-03440A	ASSY BRACKET P-PANEL;32,SECC,BUILT-IN	1	SNA
...3	M0081	6003-000115	SCREW-TAPTITE;BH,+,B,M3,L6,ZPC(BLK),SWRC	2	SNA
...3	M0146	BN61-02194A	BRACKET-PANEL TOP;Bordeaux 32,SECC,T1.2	1	SNA
...3		BN61-02195A	BRACKET-PANEL BOTTOM;Bordeaux 32,SECC,T1	1	SNA
...3		BN61-02198A	BRACKET-GUIDE MAIN;Bordeaux 32,SECC,T1.2	1	SNA
...3		BN61-02199A	BRACKET-GUIDE POWER;Bordeaux 32,SECC,T1.	1	SNA
...3		BN61-02200A	BRACKET-GUIDE POWER;Bordeaux 32,SECC,T1.	1	SNA
...3	T0514	BN61-02393A	BRACKET-SUPPORT;CAMBRIDGE 32,SECC,T1.2	1	SA
...3	M0131	AA63-01437A	GASKET;Bordeaux,Conductive Fabric,20mm,9	1	SNA
...3	M0131	AA63-01438A	GASKET;Bordeaux,Conductive Fabric,5mm,8m	1	SNA
...3	M0131	AA63-01447A	GASKET;Cambridge,Conductive Fabric,20mm,	1	SNA
..2		BN96-03590A	ASSY SHIELD P-PCB MAIN;CAMBRIDGE32,SECC	1	SNA
...3	T0603	BN63-02458A	SHIELD-PCB MAIN;CAMBRIDGE 32,SECC,T0.5,U	1	SA
...3	M0131	BN63-02627A	GASKET;Oxford,Conductive Fabric,8,13,30,	1	SA
1	M0019	BN92-01801R	ASSY LABEL;LE40R73BD,LE32R73BDX/XEF	1	SNA

ELECTRONIC SERVICE TIRGOVISTE

6-6 LE37R74BDX/XEF Parts List

Level	Loc. No.	Code No.	Description & Specification	Q'ty	SA/SNA
0		LE37R74BDX/XEF	LE37R74BD,R62C/37R72-GLY,37,LCD-TV,FRANC	0	
1	M0001	BN90-00887B	ASSY COVER FRONT;37R74,EO,CAMBRIDGE	1	SNA
..2	M0081	6003-001003	SCREW-TAPTITE;BH,+,B,M4,L12,ZPC(BLK),SWR	1	SNA
..2	M0081	6003-001003	SCREW-TAPTITE;BH,+,B,M4,L12,ZPC(BLK),SWR	2	SNA
..2	T0003	BN96-03254B	ASSY COVER P-FRONT;37R74,EO,ABS+PMMA,HB,	1	SA
...3	M0081	6003-001003	SCREW-TAPTITE;BH,+,B,M4,L12,ZPC(BLK),SWR	2	SNA
...3	T0060	BN61-01655A	SPRING ETC;STS-304 SUS,D8,L12,T0.5	1	SA
...3		BN63-02183G	COVER-SHEET;Rhcm,PE Vinyl,T0.05,1100mm,2	1.983	SNA
...3	M0112	BN63-02358B	COVER-FRONT;37R74,EO,ABS+PMMA,HB,BK23,S/	1	SA
...3	T0056	BN63-02360A	COVER-DECORATION;37R72,HIPS,HB,GR503,SVM	1	SNA
...3	T0059	BN64-00379A	INDICATOR LED;ROME-II,23,PC,CLEAR	1	SNA
...3	T0061	BN64-00453A	WINDOW-REMOCON;32R71,PC,V0,VIOLET,DIFFUS	1	SNA
...3	T0054	BN64-00465A	KNOB-DECORATION;26,32,37,40R72,ABS,HB,GR	1	SNA
...3	T0023	BN64-00466A	KNOB POWER;BORDEAUX-2,26,32,40,ABS HB,G4	1	SNA
...3		BN96-03404A	ASSY BOARD P-FUNCTION&KNOB;Bordeaux,CT50	1	SNA
....4	T0022	BN64-00442A	KNOB CONTROL;26,32,40R71,PC,BLK,ACRYL CL	1	SNA
....4	M0145	BN96-03045A	ASSY BOARD P-FUNCTION;BORDEAUX,FUNCTION	1	SA
...3	M0146	BN96-03437C	ASSY BOARD P-POWER;Bordeaux2 37",CT5000-	1	SNA
..2	T0175	BN96-03266A	ASSY SPEAKER P;8ohm,Bordeuax2, 32,Left,1	1	SA
..2	T0175	BN96-03267A	ASSY SPEAKER P;8ohm,Bordeuax2, 32,Right,	1	SA
1	M0216	BN90-00889A	ASSY STAND;37R72,BORDEAUX-2	1	SNA
..2	T0524	6902-000358	BAG PE;HDPE/NITRON(DOUBLE),T0.02/T0.5,W9	1	SNA
..2	M0013	BN96-03016A	ASSY STAND P-BASE;40R71,ABS+PMMA,HB,BK23	1	SA
...3	T0081	6002-001294	SCREW-TAPPING;BH,+,,M4,L16,ZPC(BLK)	4	SA
...3	M0081	6003-001239	SCREW-TAPTITE;FH,+,B,M4,L10,ZPC(YEL),SWR	4	SA
...3		BN61-02246A	GUIDE-STAND;40R71,ABS,V0,BLK	1	SNA
...3		BN61-02247A	HOLDER-SWIVEL RING;40R71,ACETAL,BLK	1	SNA
...3		BN61-02248A	HOLDER-SWIVEL RING;40R71,ACETAL NATUAL,T	1	SNA
...3		BN61-02249A	HOLDER-SWIVEL RING;40R71,ACETAL NATUAL,B	1	SNA
...3		BN61-02259A	BRACKET-STAND BOTTOM;BORDEAUX 40,SGHC,T3	1	SA
...3		BN61-02260A	BRACKET-HINGE SWIVEL;BORDEAUX 40,SGHC,T3	1	SA
...3	T0004	BN63-02364A	COVER-STAND BASE;40R71,ABS+PMMA,HB,BK23,	1	SNA
...3		BN63-02365A	COVER-STAND SUB;40R71,ABS+PMMA,HB,BK23,H	1	SNA
...3	T0132	BN73-00052A	RUBBER FOOT;ARES 17,SILICON,DIA 17 * T1.	4	SNA
...3		BN63-02183E	COVER-SHEET;Rhcm,PE Vinyl,T0.05,750mm,20	0.5	SNA
...3	T0514	BN61-02368A	BRACKET-SUPPORT;BORDEAUX 40,SECC,T1.2	2	SNA
1	M0002	BN90-00894A	ASSY COVER REAR;37R74,EO,CAMBRIDGE	1	SNA
..2	T0081	6002-001294	SCREW-TAPPING;BH,+,,M4,L16,ZPC(BLK)	1	SA
..2	T0081	6002-001294	SCREW-TAPPING;BH,+,,M4,L16,ZPC(BLK)	2	SA
..2	T0081	6002-001294	SCREW-TAPPING;BH,+,,M4,L16,ZPC(BLK)	14	SA
..2	M0013	BN96-03292A	ASSY COVER P-REAR;37R74,EO,ABS+PMMA,HB,B	1	SA
...3	T0101	BN61-02032A	BRACKET-WALL;32,MGM,SECC,T1.6	1	SA
...3	M0006	BN63-02456A	COVER-REAR;37R74,EO,ABS+PMMA,HB,BK23,H/G	1	SA
...3	T0071	BN64-00444F	INLAY-TERMINAL;CAMBRIDGE32,37,40,PS SHEE	1	SA
...3		BN63-02183G	COVER-SHEET;Rhcm,PE Vinyl,T0.05,1100mm,2	1	SNA
...3	T0064	BN65-00002A	CLAMPER CORE;BORDEAUX,PP,V0,BLK	1	SA
1	MP1.0	BN91-00912H	ASSY LCD-AMZ;ROME 37",AUO(T370XW01)	1	SNA
..2	M0215	BN07-00255A	LCD-PANEL;T370XW01,8bit,877.0*514.6*54.7	1	SA
1	M0017	BN91-01006G	ASSY CHASSIS;LE32R73BDX/XEF	1	SNA
..2	M0014	BN94-00865A	ASSY PCB MAIN;LE32R73BDX/XEU,CAMBRIDGE	1	SA
...3	T0245	0202-001522	SOLDER-WIRE FLUX;LFA3-107,-,D1.2,96.5Sn/	0.25	SNA
...3	JA2007	3701-001294	CONNECTOR-DSUB;15P,3R,FEMALE,STRAIGHT,AU	1	SA
...3	CN902	3703-001600	CONNECTOR-BACK PANEL;32P,2R,FEMALE,ANGLE	1	SA
...3	CN902	3703-001600	CONNECTOR-BACK PANEL;32P,2R,FEMALE,ANGLE	1	SA
...3	CN4002	3711-004484	HEADER-BOARD TO CABLE;BOX,5P,1R,2mm,STRA	1	SA

ELECTRONIC SERVICE TIRGOVISTE

Level	Loc. No.	Code No.	Description & Specification	Q'ty	SA/SNA
...3	TEST3001	3711-004484	HEADER-BOARD TO CABLE;BOX,5P,1R,2mm,STRA	1	SA
...3	CN2002_32	3711-004909	HEADER-BOARD TO CABLE;BOX,14P,2R,2MM,ANG	1	SA
...3	CN4004	3711-005606	HEADER-BOARD TO CABLE;BOX,30P,2R,2mm,STR	1	SA
...3	CN1001	3711-005942	HEADER-BOARD TO CABLE;BOX,16P,1R,2mm,STR	1	SA
...3	JA2001	3722-000498	JACK-SCART;21P,-,SN,BLK,NO	1	SA
...3	JA2005	3722-000498	JACK-SCART;21P,-,SN,BLK,NO	1	SA
...3	JA2003	3722-001061	JACK-PHONE;1P,3.6PI,AG,BLK,N	1	SA
...3	JA2006	3722-001061	JACK-PHONE;1P,3.6PI,AG,BLK,N	1	SA
...3	JA2010	3722-002360	JACK-PIN;3P,AU,GRN/BLU/RED,STRAIGHT	1	SA
...3	JA2002	3722-002362	JACK-PIN;2P,Sn,WHT/RED,STRAIGHT	1	SA
...3	JA2004	3722-002362	JACK-PIN;2P,Sn,WHT/RED,STRAIGHT	1	SA
...3	JA2009	3722-002362	JACK-PIN;2P,Sn,WHT/RED,STRAIGHT	1	SA
...3	CIS3	BN40-00080A	TUNER;DNOS403ZH261B(S),DNOS403ZH261B(S),	1	SA
...3	T0852	BN96-01470A	ASSY BOARD P-OPTICAL;HP-P5581,OPTICAL	1	SA
....4	CN906	3707-001067	CONNECTOR-OPTICAL;PLUG,SM,-,4.4/2.0mm	1	SA
...3	T0510	BN97-00829A	ASSY SMD-MAIN;LE32R73BDX/XEU,CAMBRIDGE	1	SNA
....4	CIS05	0202-001477	SOLDER-CREAM;LST309-M,-,D20~45§-,96.5Sn/	3.571	SNA
....4	D2003	0401-001056	DIODE-SWITCHING;MMBD4148SE,100V,200mA,SO	1	SA
....4	D2010	0401-001056	DIODE-SWITCHING;MMBD4148SE,100V,200mA,SO	1	SA
....4	D2011	0401-001056	DIODE-SWITCHING;MMBD4148SE,100V,200mA,SO	1	SA
....4	D2012	0401-001056	DIODE-SWITCHING;MMBD4148SE,100V,200mA,SO	1	SA
....4	D2013	0401-001056	DIODE-SWITCHING;MMBD4148SE,100V,200mA,SO	1	SA
....4	D2016	0401-001056	DIODE-SWITCHING;MMBD4148SE,100V,200mA,SO	1	SA
....4	D2017	0401-001056	DIODE-SWITCHING;MMBD4148SE,100V,200mA,SO	1	SA
....4	D2018	0401-001056	DIODE-SWITCHING;MMBD4148SE,100V,200mA,SO	1	SA
....4	D2019	0401-001056	DIODE-SWITCHING;MMBD4148SE,100V,200mA,SO	1	SA
....4	D2020	0401-001056	DIODE-SWITCHING;MMBD4148SE,100V,200mA,SO	1	SA
....4	D2021	0401-001056	DIODE-SWITCHING;MMBD4148SE,100V,200mA,SO	1	SA
....4	D2022	0401-001056	DIODE-SWITCHING;MMBD4148SE,100V,200mA,SO	1	SA
....4	D2023	0401-001056	DIODE-SWITCHING;MMBD4148SE,100V,200mA,SO	1	SA
....4	D2032	0401-001056	DIODE-SWITCHING;MMBD4148SE,100V,200mA,SO	1	SA
....4	D2033	0401-001056	DIODE-SWITCHING;MMBD4148SE,100V,200mA,SO	1	SA
....4	D2034	0401-001056	DIODE-SWITCHING;MMBD4148SE,100V,200mA,SO	1	SA
....4	D2044	0401-001056	DIODE-SWITCHING;MMBD4148SE,100V,200mA,SO	1	SA
....4	D2057	0401-001056	DIODE-SWITCHING;MMBD4148SE,100V,200mA,SO	1	SA
....4	D5001	0401-001056	DIODE-SWITCHING;MMBD4148SE,100V,200mA,SO	1	SA
....4	D5002	0401-001056	DIODE-SWITCHING;MMBD4148SE,100V,200mA,SO	1	SA
....4	D5003	0401-001056	DIODE-SWITCHING;MMBD4148SE,100V,200mA,SO	1	SA
....4	D5004	0401-001056	DIODE-SWITCHING;MMBD4148SE,100V,200mA,SO	1	SA
....4	D5005	0401-001056	DIODE-SWITCHING;MMBD4148SE,100V,200mA,SO	1	SA
....4	D5006	0401-001056	DIODE-SWITCHING;MMBD4148SE,100V,200mA,SO	1	SA
....4	D1001	0402-000553	DIODE-RECTIFIER;SS24,40V,2A,DO-214AA,TP	1	SA
....4	D1004	0402-000553	DIODE-RECTIFIER;SS24,40V,2A,DO-214AA,TP	1	SA
....4	D1008	0403-000258	DIODE-ZENER;BZX84C5V6,5.2-6V,225mW,SOT-2	1	SA
....4	D3003	0403-000258	DIODE-ZENER;BZX84C5V6,5.2-6V,225mW,SOT-2	1	SA
....4	D2001	0403-000620	DIODE-ZENER;RLZ5.6B,5.45-5.73V,500mW,LL-	1	SA
....4	D2002	0403-000620	DIODE-ZENER;RLZ5.6B,5.45-5.73V,500mW,LL-	1	SA
....4	D2040	0403-000620	DIODE-ZENER;RLZ5.6B,5.45-5.73V,500mW,LL-	1	SA
....4	D2041	0403-000620	DIODE-ZENER;RLZ5.6B,5.45-5.73V,500mW,LL-	1	SA
....4	D2042	0403-000620	DIODE-ZENER;RLZ5.6B,5.45-5.73V,500mW,LL-	1	SA
....4	D2043	0403-000620	DIODE-ZENER;RLZ5.6B,5.45-5.73V,500mW,LL-	1	SA
....4	D2064	0403-000620	DIODE-ZENER;RLZ5.6B,5.45-5.73V,500mW,LL-	1	SA
....4	D2065	0403-000620	DIODE-ZENER;RLZ5.6B,5.45-5.73V,500mW,LL-	1	SA
....4	D3006	0403-000620	DIODE-ZENER;RLZ5.6B,5.45-5.73V,500mW,LL-	1	SA
....4	D3008	0403-000620	DIODE-ZENER;RLZ5.6B,5.45-5.73V,500mW,LL-	1	SA
....4	D4001	0403-000620	DIODE-ZENER;RLZ5.6B,5.45-5.73V,500mW,LL-	1	SA
....4	D4002	0403-000620	DIODE-ZENER;RLZ5.6B,5.45-5.73V,500mW,LL-	1	SA
....4	D4003	0403-000620	DIODE-ZENER;RLZ5.6B,5.45-5.73V,500mW,LL-	1	SA
....4	D4005	0403-000620	DIODE-ZENER;RLZ5.6B,5.45-5.73V,500mW,LL-	1	SA
....4	D4006	0403-000620	DIODE-ZENER;RLZ5.6B,5.45-5.73V,500mW,LL-	1	SA

ELECTRONIC SERVICE TIRGOVISTE

Level	Loc. No.	Code No.	Description & Specification	Q'ty	SA/SNA
....4	D4007	0403-000620	DIODE-ZENER;RLZ5.6B,5.45-5.73V,500mW,LL-	1	SA
....4	D4008	0403-000620	DIODE-ZENER;RLZ5.6B,5.45-5.73V,500mW,LL-	1	SA
....4	D4009	0403-000620	DIODE-ZENER;RLZ5.6B,5.45-5.73V,500mW,LL-	1	SA
....4	D4010	0403-000620	DIODE-ZENER;RLZ5.6B,5.45-5.73V,500mW,LL-	1	SA
....4	D4011	0403-000620	DIODE-ZENER;RLZ5.6B,5.45-5.73V,500mW,LL-	1	SA
....4	D4012	0403-000620	DIODE-ZENER;RLZ5.6B,5.45-5.73V,500mW,LL-	1	SA
....4	D2004	0403-001016	DIODE-ZENER;RLZ6.2B,5.96-6.27V,500mW,LL-	1	SA
....4	D2009	0403-001169	DIODE-ZENER;RLZ16C,15.96-16.51V,500MW,LL	1	SA
....4	D2039	0403-001169	DIODE-ZENER;RLZ16C,15.96-16.51V,500MW,LL	1	SA
....4	D2005	0406-001172	DIODE-TVS;CDS3C30GTH,48V,0W,SMD	1	SA
....4	D2006	0406-001172	DIODE-TVS;CDS3C30GTH,48V,0W,SMD	1	SA
....4	D2007	0406-001172	DIODE-TVS;CDS3C30GTH,48V,0W,SMD	1	SA
....4	D2008	0406-001172	DIODE-TVS;CDS3C30GTH,48V,0W,SMD	1	SA
....4	D2014	0406-001172	DIODE-TVS;CDS3C30GTH,48V,0W,SMD	1	SA
....4	D2015	0406-001172	DIODE-TVS;CDS3C30GTH,48V,0W,SMD	1	SA
....4	D2024	0406-001172	DIODE-TVS;CDS3C30GTH,48V,0W,SMD	1	SA
....4	D2025	0406-001172	DIODE-TVS;CDS3C30GTH,48V,0W,SMD	1	SA
....4	D2026	0406-001172	DIODE-TVS;CDS3C30GTH,48V,0W,SMD	1	SA
....4	D2027	0406-001172	DIODE-TVS;CDS3C30GTH,48V,0W,SMD	1	SA
....4	D2028	0406-001172	DIODE-TVS;CDS3C30GTH,48V,0W,SMD	1	SA
....4	D2029	0406-001172	DIODE-TVS;CDS3C30GTH,48V,0W,SMD	1	SA
....4	D2030	0406-001172	DIODE-TVS;CDS3C30GTH,48V,0W,SMD	1	SA
....4	D2031	0406-001172	DIODE-TVS;CDS3C30GTH,48V,0W,SMD	1	SA
....4	D2035	0406-001172	DIODE-TVS;CDS3C30GTH,48V,0W,SMD	1	SA
....4	D2036	0406-001172	DIODE-TVS;CDS3C30GTH,48V,0W,SMD	1	SA
....4	D2037	0406-001172	DIODE-TVS;CDS3C30GTH,48V,0W,SMD	1	SA
....4	D2038	0406-001172	DIODE-TVS;CDS3C30GTH,48V,0W,SMD	1	SA
....4	D2051	0406-001172	DIODE-TVS;CDS3C30GTH,48V,0W,SMD	1	SA
....4	D2052	0406-001172	DIODE-TVS;CDS3C30GTH,48V,0W,SMD	1	SA
....4	D2054	0406-001172	DIODE-TVS;CDS3C30GTH,48V,0W,SMD	1	SA
....4	D2055	0406-001172	DIODE-TVS;CDS3C30GTH,48V,0W,SMD	1	SA
....4	D2056	0406-001172	DIODE-TVS;CDS3C30GTH,48V,0W,SMD	1	SA
....4	D1002	0407-000123	DIODE-ARRAY;DAN202K,80V,100mA,CA2-3,SOT-	1	SA
....4	D1009	0407-000123	DIODE-ARRAY;DAN202K,80V,100mA,CA2-3,SOT-	1	SA
....4	D3001	0407-000123	DIODE-ARRAY;DAN202K,80V,100mA,CA2-3,SOT-	1	SA
....4	D3002	0407-000123	DIODE-ARRAY;DAN202K,80V,100mA,CA2-3,SOT-	1	SA
....4	D3007_32	0407-000123	DIODE-ARRAY;DAN202K,80V,100mA,CA2-3,SOT-	1	SA
....4	Q1007	0501-000280	TR-SMALL SIGNAL;KSA1182,PNP,150MW,SOT-23	1	SA
....4	Q1001	0501-000342	TR-SMALL SIGNAL;KSC1623-Y,NPN,200mW,SOT-	1	SA
....4	Q1002	0501-000342	TR-SMALL SIGNAL;KSC1623-Y,NPN,200mW,SOT-	1	SA
....4	Q1005	0501-000342	TR-SMALL SIGNAL;KSC1623-Y,NPN,200mW,SOT-	1	SA
....4	Q1006	0501-000342	TR-SMALL SIGNAL;KSC1623-Y,NPN,200mW,SOT-	1	SA
....4	Q1008	0501-000342	TR-SMALL SIGNAL;KSC1623-Y,NPN,200mW,SOT-	1	SA
....4	Q1009	0501-000342	TR-SMALL SIGNAL;KSC1623-Y,NPN,200mW,SOT-	1	SA
....4	Q1010	0501-000342	TR-SMALL SIGNAL;KSC1623-Y,NPN,200mW,SOT-	1	SA
....4	Q1011	0501-000342	TR-SMALL SIGNAL;KSC1623-Y,NPN,200mW,SOT-	1	SA
....4	Q1013	0501-000342	TR-SMALL SIGNAL;KSC1623-Y,NPN,200mW,SOT-	1	SA
....4	Q1014	0501-000342	TR-SMALL SIGNAL;KSC1623-Y,NPN,200mW,SOT-	1	SA
....4	Q2001	0501-000342	TR-SMALL SIGNAL;KSC1623-Y,NPN,200mW,SOT-	1	SA
....4	Q3001	0501-000342	TR-SMALL SIGNAL;KSC1623-Y,NPN,200mW,SOT-	1	SA
....4	Q3003	0501-000342	TR-SMALL SIGNAL;KSC1623-Y,NPN,200mW,SOT-	1	SA
....4	Q3008	0501-000342	TR-SMALL SIGNAL;KSC1623-Y,NPN,200mW,SOT-	1	SA
....4	Q3010	0501-000342	TR-SMALL SIGNAL;KSC1623-Y,NPN,200mW,SOT-	1	SA
....4	Q3011	0501-000342	TR-SMALL SIGNAL;KSC1623-Y,NPN,200mW,SOT-	1	SA
....4	Q4001	0501-000342	TR-SMALL SIGNAL;KSC1623-Y,NPN,200mW,SOT-	1	SA
....4	Q5010	0501-000342	TR-SMALL SIGNAL;KSC1623-Y,NPN,200mW,SOT-	1	SA
....4	Q1003	0501-002080	TR-SMALL SIGNAL;2SC2412K,NPN,200mW,SC-59	1	SA
....4	Q1004	0501-002080	TR-SMALL SIGNAL;2SC2412K,NPN,200mW,SC-59	1	SA
....4	Q5011	0501-002080	TR-SMALL SIGNAL;2SC2412K,NPN,200mW,SC-59	1	SA
....4	Q409	0505-000110	FET-SILICON;2N7002,N,60V,115mA,7.5ohm,0.	1	SA

ELECTRONIC SERVICE TIRGOVISTE

Level	Loc. No.	Code No.	Description & Specification	Q'ty	SA/SNA
....4	Q409	0505-000110	FET-SILICON;2N7002,N,60V,115mA,7.5ohm,0.	1	SA
....4	Q409	0505-000110	FET-SILICON;2N7002,N,60V,115mA,7.5ohm,0.	1	SA
....4	Q409	0505-000110	FET-SILICON;2N7002,N,60V,115mA,7.5ohm,0.	1	SA
....4	Q409	0505-000110	FET-SILICON;2N7002,N,60V,115mA,7.5ohm,0.	1	SA
....4	Q409	0505-001170	FET-SILICON;SI9933ADY-T1,P,-20V,3.4A,0.0	1	SA
....4	IC104	0801-002095	IC-CMOS LOGIC;74LCX245,TRANSCEIVER,TSSOP	1	SA
....4	IC3002	0903-001432	IC-MICROCOMPUTER;M30840SGP,16Bit,LQFP,10	1	SA
....4	IC1003	1001-000164	IC-ANALOG MULTIPLEX;74HC4052,CMOS,SOP,16	1	SA
....4	IC1006	1001-000164	IC-ANALOG MULTIPLEX;74HC4052,CMOS,SOP,16	1	SA
....4	IC106	1001-001082	IC-VIDEO SWITCH;BA7657F,-,SOP,24P,300MIL	1	SA
....4	IC3006	1001-001109	IC-ANALOG SWITCH;FST3125M,BUS SWITCH & C	1	SA
....4	IC5005	1001-001109	IC-ANALOG SWITCH;FST3125M,BUS SWITCH & C	1	SA
....4	IC107	1002-001399	IC-D/A CONVERTER;PCM1754,24BIT,SSOP,16P,	1	SA
....4	IC110	1006-001076	IC-DRIVER/RECEIVER;MAX232ECWE+T,SOP,16P,	1	SA
....4	IC112	1103-000129	IC-EEPROM;24C02,2Kbit,256x8Bit,SOP,8P,5x	1	SA
....4	IC112	1103-000129	IC-EEPROM;24C02,2Kbit,256x8Bit,SOP,8P,5x	1	SA
....4	IC112	1103-001279	IC-EEPROM;24C32,32Kbit,4Kx8Bit,SOP,8P,5x	1	SA
....4	IC5002	1105-001538	IC-VIDEO RAM;K4D263238,-,128M,4x1Mx32Bit	1	SA
....4	DU410	1201-000166	IC-OP AMP;LM358,SOP,ST,8P,150MIL,DUAL,10	1	SA
....4	T0085	1201-002136	IC-AUDIO AMP;LM4810,MSOP,8P,3x3mm,DUAL,-	1	SA
....4	T0085	1201-002246	IC-AUDIO AMP;STA323W,SO,36P,15.9x11mm,-,	1	SA
....4	IC150	1203-001009	IC-SWITCH REG.;3172,SOP,8P,244MIL,PLASTI	1	SA
....4	IC3009	1203-001559	IC-RESET;DS1834A,SOIC,8P,150MIL,PLASTIC,	1	SA
....4	T0087	1203-001815	IC-POSI.FIXED REG.;78M09,TO-252,3P,-,PLA	1	SA
....4	T0087	1203-001816	IC-POSI.FIXED REG.;78M08,TO-252,3P,-,PLA	1	SA
....4	IC3008_32	1203-001824	IC-VOL. DETECTOR;7042,SOT-89,3P,-,PLASTI	1	SA
....4	T0087	1203-002842	IC-POSI.FIXED REG.;AP1117D-33A,TO-252,3P	1	SA
....4	T0087	1203-002842	IC-POSI.FIXED REG.;AP1117D-33A,TO-252,3P	1	SA
....4	T0087	1203-002855	IC-POSI.FIXED REG.;MC33269DTRK-5.0,DPRK,	1	SA
....4	T0087	1203-002974	IC-POSI.FIXED REG.;AP1117D-25A,TO-252,3P	1	SA
....4	T0170	1203-003059	IC-SWITCH VOL. REG.;MP1583,SOIC,8P,4.9x3	1	SA
....4	IC1009	1204-002464	IC-AUDIO PROCESSOR;STV8257DSX,TQFP,80P,1	1	SA
....4	IC118	1204-002503	IC-VIDEO PROCESS;SVP-PX56-7256,PQFP,256P	1	SNA
....4	R5026	2007-000043	R-CHIP;1Kohm,1%,1/10W,TP,1608	1	SA
....4	R5029	2007-000043	R-CHIP;1Kohm,1%,1/10W,TP,1608	1	SA
....4	R3088	2007-000052	R-CHIP;10Kohm,1%,1/10W,TP,1608	1	SA
....4	R3100	2007-000052	R-CHIP;10Kohm,1%,1/10W,TP,1608	1	SA
....4	R3101	2007-000052	R-CHIP;10Kohm,1%,1/10W,TP,1608	1	SA
....4	R3102	2007-000052	R-CHIP;10Kohm,1%,1/10W,TP,1608	1	SA
....4	R3103	2007-000052	R-CHIP;10Kohm,1%,1/10W,TP,1608	1	SA
....4	R3104	2007-000052	R-CHIP;10Kohm,1%,1/10W,TP,1608	1	SA
....4	R3105	2007-000052	R-CHIP;10Kohm,1%,1/10W,TP,1608	1	SA
....4	R3106	2007-000052	R-CHIP;10Kohm,1%,1/10W,TP,1608	1	SA
....4	R3107	2007-000052	R-CHIP;10Kohm,1%,1/10W,TP,1608	1	SA
....4	R3130	2007-000052	R-CHIP;10Kohm,1%,1/10W,TP,1608	1	SA
....4	R3141	2007-000052	R-CHIP;10Kohm,1%,1/10W,TP,1608	1	SA
....4	R5013	2007-000060	R-CHIP;100Kohm,1%,1/10W,TP,1608	1	SA
....4	R1066	2007-000067	R-CHIP;15Kohm,1%,1/10W,TP,1608	1	SA
....4	R1059	2007-000070	R-CHIP;0ohm,5%,1/10W,TP,1608	1	SA
....4	R1085	2007-000070	R-CHIP;0ohm,5%,1/10W,TP,1608	1	SA
....4	R1086	2007-000070	R-CHIP;0ohm,5%,1/10W,TP,1608	1	SA
....4	R1087	2007-000070	R-CHIP;0ohm,5%,1/10W,TP,1608	1	SA
....4	R2055	2007-000070	R-CHIP;0ohm,5%,1/10W,TP,1608	1	SA
....4	R2064	2007-000070	R-CHIP;0ohm,5%,1/10W,TP,1608	1	SA
....4	R2080	2007-000070	R-CHIP;0ohm,5%,1/10W,TP,1608	1	SA
....4	R3003	2007-000070	R-CHIP;0ohm,5%,1/10W,TP,1608	1	SA
....4	R3019	2007-000070	R-CHIP;0ohm,5%,1/10W,TP,1608	1	SA
....4	R3024	2007-000070	R-CHIP;0ohm,5%,1/10W,TP,1608	1	SA
....4	R3025_LVDS	2007-000070	R-CHIP;0ohm,5%,1/10W,TP,1608	1	SA
....4	R3026	2007-000070	R-CHIP;0ohm,5%,1/10W,TP,1608	1	SA

ELECTRONIC SERVICE TIRGOVISTE

Level	Loc. No.	Code No.	Description & Specification	Q'ty	SA/SNA
....4	R3027	2007-000070	R-CHIP;0ohm,5%,1/10W,TP,1608	1	SA
....4	R3028	2007-000070	R-CHIP;0ohm,5%,1/10W,TP,1608	1	SA
....4	R3029	2007-000070	R-CHIP;0ohm,5%,1/10W,TP,1608	1	SA
....4	R3031	2007-000070	R-CHIP;0ohm,5%,1/10W,TP,1608	1	SA
....4	R3032	2007-000070	R-CHIP;0ohm,5%,1/10W,TP,1608	1	SA
....4	R3033	2007-000070	R-CHIP;0ohm,5%,1/10W,TP,1608	1	SA
....4	R3035	2007-000070	R-CHIP;0ohm,5%,1/10W,TP,1608	1	SA
....4	R3037	2007-000070	R-CHIP;0ohm,5%,1/10W,TP,1608	1	SA
....4	R3039	2007-000070	R-CHIP;0ohm,5%,1/10W,TP,1608	1	SA
....4	R3040	2007-000070	R-CHIP;0ohm,5%,1/10W,TP,1608	1	SA
....4	R3041	2007-000070	R-CHIP;0ohm,5%,1/10W,TP,1608	1	SA
....4	R3043	2007-000070	R-CHIP;0ohm,5%,1/10W,TP,1608	1	SA
....4	R3047_LVDS	2007-000070	R-CHIP;0ohm,5%,1/10W,TP,1608	1	SA
....4	R3089	2007-000070	R-CHIP;0ohm,5%,1/10W,TP,1608	1	SA
....4	R3090	2007-000070	R-CHIP;0ohm,5%,1/10W,TP,1608	1	SA
....4	R3117	2007-000070	R-CHIP;0ohm,5%,1/10W,TP,1608	1	SA
....4	R3118	2007-000070	R-CHIP;0ohm,5%,1/10W,TP,1608	1	SA
....4	R3132	2007-000070	R-CHIP;0ohm,5%,1/10W,TP,1608	1	SA
....4	R4001	2007-000070	R-CHIP;0ohm,5%,1/10W,TP,1608	1	SA
....4	R4002	2007-000070	R-CHIP;0ohm,5%,1/10W,TP,1608	1	SA
....4	R4003	2007-000070	R-CHIP;0ohm,5%,1/10W,TP,1608	1	SA
....4	R4012	2007-000070	R-CHIP;0ohm,5%,1/10W,TP,1608	1	SA
....4	R4016	2007-000070	R-CHIP;0ohm,5%,1/10W,TP,1608	1	SA
....4	R4017	2007-000070	R-CHIP;0ohm,5%,1/10W,TP,1608	1	SA
....4	R4018	2007-000070	R-CHIP;0ohm,5%,1/10W,TP,1608	1	SA
....4	R4019	2007-000070	R-CHIP;0ohm,5%,1/10W,TP,1608	1	SA
....4	R4032	2007-000070	R-CHIP;0ohm,5%,1/10W,TP,1608	1	SA
....4	R4033	2007-000070	R-CHIP;0ohm,5%,1/10W,TP,1608	1	SA
....4	R4035	2007-000070	R-CHIP;0ohm,5%,1/10W,TP,1608	1	SA
....4	R4051_32	2007-000070	R-CHIP;0ohm,5%,1/10W,TP,1608	1	SA
....4	R4086_EN	2007-000070	R-CHIP;0ohm,5%,1/10W,TP,1608	1	SA
....4	R4090	2007-000070	R-CHIP;0ohm,5%,1/10W,TP,1608	1	SA
....4	R5012	2007-000070	R-CHIP;0ohm,5%,1/10W,TP,1608	1	SA
....4	R5014	2007-000070	R-CHIP;0ohm,5%,1/10W,TP,1608	1	SA
....4	R5068	2007-000070	R-CHIP;0ohm,5%,1/10W,TP,1608	1	SA
....4	R5076	2007-000070	R-CHIP;0ohm,5%,1/10W,TP,1608	1	SA
....4	R5084	2007-000070	R-CHIP;0ohm,5%,1/10W,TP,1608	1	SA
....4	R5087	2007-000070	R-CHIP;0ohm,5%,1/10W,TP,1608	1	SA
....4	R5099	2007-000070	R-CHIP;0ohm,5%,1/10W,TP,1608	1	SA
....4	R5100	2007-000070	R-CHIP;0ohm,5%,1/10W,TP,1608	1	SA
....4	R5101	2007-000070	R-CHIP;0ohm,5%,1/10W,TP,1608	1	SA
....4	R5115	2007-000070	R-CHIP;0ohm,5%,1/10W,TP,1608	1	SA
....4	R5116	2007-000070	R-CHIP;0ohm,5%,1/10W,TP,1608	1	SA
....4	R5117	2007-000070	R-CHIP;0ohm,5%,1/10W,TP,1608	1	SA
....4	R5120	2007-000070	R-CHIP;0ohm,5%,1/10W,TP,1608	1	SA
....4	R1084	2007-000071	R-CHIP;22ohm,5%,1/10W,TP,1608	1	SA
....4	R1095	2007-000071	R-CHIP;22ohm,5%,1/10W,TP,1608	1	SA
....4	R2050	2007-000071	R-CHIP;22ohm,5%,1/10W,TP,1608	1	SA
....4	R2063	2007-000071	R-CHIP;22ohm,5%,1/10W,TP,1608	1	SA
....4	R2106	2007-000071	R-CHIP;22ohm,5%,1/10W,TP,1608	1	SA
....4	R2107	2007-000071	R-CHIP;22ohm,5%,1/10W,TP,1608	1	SA
....4	R2108	2007-000071	R-CHIP;22ohm,5%,1/10W,TP,1608	1	SA
....4	R2109	2007-000071	R-CHIP;22ohm,5%,1/10W,TP,1608	1	SA
....4	R2110	2007-000071	R-CHIP;22ohm,5%,1/10W,TP,1608	1	SA
....4	R2111	2007-000071	R-CHIP;22ohm,5%,1/10W,TP,1608	1	SA
....4	R2112	2007-000071	R-CHIP;22ohm,5%,1/10W,TP,1608	1	SA
....4	R2113	2007-000071	R-CHIP;22ohm,5%,1/10W,TP,1608	1	SA
....4	R4015	2007-000071	R-CHIP;22ohm,5%,1/10W,TP,1608	1	SA
....4	R4020	2007-000071	R-CHIP;22ohm,5%,1/10W,TP,1608	1	SA
....4	R4093	2007-000071	R-CHIP;22ohm,5%,1/10W,TP,1608	1	SA

ELECTRONIC SERVICE TIRGOVISTE

Level	Loc. No.	Code No.	Description & Specification	Q'ty	SA/SNA
....4	R5030	2007-000071	R-CHIP;22ohm,5%,1/10W,TP,1608	1	SA
....4	R5031	2007-000071	R-CHIP;22ohm,5%,1/10W,TP,1608	1	SA
....4	R5032	2007-000071	R-CHIP;22ohm,5%,1/10W,TP,1608	1	SA
....4	R5033	2007-000071	R-CHIP;22ohm,5%,1/10W,TP,1608	1	SA
....4	R5061	2007-000071	R-CHIP;22ohm,5%,1/10W,TP,1608	1	SA
....4	R5065	2007-000071	R-CHIP;22ohm,5%,1/10W,TP,1608	1	SA
....4	R5071	2007-000071	R-CHIP;22ohm,5%,1/10W,TP,1608	1	SA
....4	R5077	2007-000071	R-CHIP;22ohm,5%,1/10W,TP,1608	1	SA
....4	R5081	2007-000071	R-CHIP;22ohm,5%,1/10W,TP,1608	1	SA
....4	R5085	2007-000071	R-CHIP;22ohm,5%,1/10W,TP,1608	1	SA
....4	R5088	2007-000071	R-CHIP;22ohm,5%,1/10W,TP,1608	1	SA
....4	R5090	2007-000071	R-CHIP;22ohm,5%,1/10W,TP,1608	1	SA
....4	R5094	2007-000071	R-CHIP;22ohm,5%,1/10W,TP,1608	1	SA
....4	R5098	2007-000071	R-CHIP;22ohm,5%,1/10W,TP,1608	1	SA
....4	R5102	2007-000071	R-CHIP;22ohm,5%,1/10W,TP,1608	1	SA
....4	R5104	2007-000071	R-CHIP;22ohm,5%,1/10W,TP,1608	1	SA
....4	R5106	2007-000071	R-CHIP;22ohm,5%,1/10W,TP,1608	1	SA
....4	R5108	2007-000071	R-CHIP;22ohm,5%,1/10W,TP,1608	1	SA
....4	R1061	2007-000072	R-CHIP;47ohm,5%,1/10W,TP,1608	1	SA
....4	R1063	2007-000072	R-CHIP;47ohm,5%,1/10W,TP,1608	1	SA
....4	R2007	2007-000072	R-CHIP;47ohm,5%,1/10W,TP,1608	1	SA
....4	R2008	2007-000072	R-CHIP;47ohm,5%,1/10W,TP,1608	1	SA
....4	R2049	2007-000072	R-CHIP;47ohm,5%,1/10W,TP,1608	1	SA
....4	R2051	2007-000072	R-CHIP;47ohm,5%,1/10W,TP,1608	1	SA
....4	R4104	2007-000072	R-CHIP;47ohm,5%,1/10W,TP,1608	1	SA
....4	R4105	2007-000072	R-CHIP;47ohm,5%,1/10W,TP,1608	1	SA
....4	R4106	2007-000072	R-CHIP;47ohm,5%,1/10W,TP,1608	1	SA
....4	R4107	2007-000072	R-CHIP;47ohm,5%,1/10W,TP,1608	1	SA
....4	R4108	2007-000072	R-CHIP;47ohm,5%,1/10W,TP,1608	1	SA
....4	R4109	2007-000072	R-CHIP;47ohm,5%,1/10W,TP,1608	1	SA
....4	R4110	2007-000072	R-CHIP;47ohm,5%,1/10W,TP,1608	1	SA
....4	R4111	2007-000072	R-CHIP;47ohm,5%,1/10W,TP,1608	1	SA
....4	R4112	2007-000072	R-CHIP;47ohm,5%,1/10W,TP,1608	1	SA
....4	R4113	2007-000072	R-CHIP;47ohm,5%,1/10W,TP,1608	1	SA
....4	R5019	2007-000072	R-CHIP;47ohm,5%,1/10W,TP,1608	1	SA
....4	R5020	2007-000072	R-CHIP;47ohm,5%,1/10W,TP,1608	1	SA
....4	R5048	2007-000072	R-CHIP;47ohm,5%,1/10W,TP,1608	1	SA
....4	R5050	2007-000072	R-CHIP;47ohm,5%,1/10W,TP,1608	1	SA
....4	R1009	2007-000074	R-CHIP;100ohm,5%,1/10W,TP,1608	1	SA
....4	R1010	2007-000074	R-CHIP;100ohm,5%,1/10W,TP,1608	1	SA
....4	R1011	2007-000074	R-CHIP;100ohm,5%,1/10W,TP,1608	1	SA
....4	R1012	2007-000074	R-CHIP;100ohm,5%,1/10W,TP,1608	1	SA
....4	R1013	2007-000074	R-CHIP;100ohm,5%,1/10W,TP,1608	1	SA
....4	R1014	2007-000074	R-CHIP;100ohm,5%,1/10W,TP,1608	1	SA
....4	R1017	2007-000074	R-CHIP;100ohm,5%,1/10W,TP,1608	1	SA
....4	R1018	2007-000074	R-CHIP;100ohm,5%,1/10W,TP,1608	1	SA
....4	R1032	2007-000074	R-CHIP;100ohm,5%,1/10W,TP,1608	1	SA
....4	R1033	2007-000074	R-CHIP;100ohm,5%,1/10W,TP,1608	1	SA
....4	R1037	2007-000074	R-CHIP;100ohm,5%,1/10W,TP,1608	1	SA
....4	R1040	2007-000074	R-CHIP;100ohm,5%,1/10W,TP,1608	1	SA
....4	R1042	2007-000074	R-CHIP;100ohm,5%,1/10W,TP,1608	1	SA
....4	R1047	2007-000074	R-CHIP;100ohm,5%,1/10W,TP,1608	1	SA
....4	R1048	2007-000074	R-CHIP;100ohm,5%,1/10W,TP,1608	1	SA
....4	R1049	2007-000074	R-CHIP;100ohm,5%,1/10W,TP,1608	1	SA
....4	R1050	2007-000074	R-CHIP;100ohm,5%,1/10W,TP,1608	1	SA
....4	R1052	2007-000074	R-CHIP;100ohm,5%,1/10W,TP,1608	1	SA
....4	R1053	2007-000074	R-CHIP;100ohm,5%,1/10W,TP,1608	1	SA
....4	R1054	2007-000074	R-CHIP;100ohm,5%,1/10W,TP,1608	1	SA
....4	R1055	2007-000074	R-CHIP;100ohm,5%,1/10W,TP,1608	1	SA
....4	R1056	2007-000074	R-CHIP;100ohm,5%,1/10W,TP,1608	1	SA

ELECTRONIC SERVICE TIRGOVISTE

Level	Loc. No.	Code No.	Description & Specification	Q'ty	SA/SNA
....4	R1091	2007-000074	R-CHIP;100ohm,5%,1/10W,TP,1608	1	SA
....4	R1092	2007-000074	R-CHIP;100ohm,5%,1/10W,TP,1608	1	SA
....4	R1093	2007-000074	R-CHIP;100ohm,5%,1/10W,TP,1608	1	SA
....4	R2018	2007-000074	R-CHIP;100ohm,5%,1/10W,TP,1608	1	SA
....4	R2022	2007-000074	R-CHIP;100ohm,5%,1/10W,TP,1608	1	SA
....4	R2023	2007-000074	R-CHIP;100ohm,5%,1/10W,TP,1608	1	SA
....4	R2029	2007-000074	R-CHIP;100ohm,5%,1/10W,TP,1608	1	SA
....4	R2031	2007-000074	R-CHIP;100ohm,5%,1/10W,TP,1608	1	SA
....4	R2053	2007-000074	R-CHIP;100ohm,5%,1/10W,TP,1608	1	SA
....4	R2058	2007-000074	R-CHIP;100ohm,5%,1/10W,TP,1608	1	SA
....4	R2060	2007-000074	R-CHIP;100ohm,5%,1/10W,TP,1608	1	SA
....4	R2068	2007-000074	R-CHIP;100ohm,5%,1/10W,TP,1608	1	SA
....4	R2081	2007-000074	R-CHIP;100ohm,5%,1/10W,TP,1608	1	SA
....4	R2084	2007-000074	R-CHIP;100ohm,5%,1/10W,TP,1608	1	SA
....4	R2093	2007-000074	R-CHIP;100ohm,5%,1/10W,TP,1608	1	SA
....4	R3008	2007-000074	R-CHIP;100ohm,5%,1/10W,TP,1608	1	SA
....4	R3009	2007-000074	R-CHIP;100ohm,5%,1/10W,TP,1608	1	SA
....4	R3010	2007-000074	R-CHIP;100ohm,5%,1/10W,TP,1608	1	SA
....4	R3011	2007-000074	R-CHIP;100ohm,5%,1/10W,TP,1608	1	SA
....4	R3034	2007-000074	R-CHIP;100ohm,5%,1/10W,TP,1608	1	SA
....4	R3046	2007-000074	R-CHIP;100ohm,5%,1/10W,TP,1608	1	SA
....4	R3057	2007-000074	R-CHIP;100ohm,5%,1/10W,TP,1608	1	SA
....4	R3058	2007-000074	R-CHIP;100ohm,5%,1/10W,TP,1608	1	SA
....4	R3059	2007-000074	R-CHIP;100ohm,5%,1/10W,TP,1608	1	SA
....4	R3062	2007-000074	R-CHIP;100ohm,5%,1/10W,TP,1608	1	SA
....4	R3063	2007-000074	R-CHIP;100ohm,5%,1/10W,TP,1608	1	SA
....4	R3073	2007-000074	R-CHIP;100ohm,5%,1/10W,TP,1608	1	SA
....4	R3074	2007-000074	R-CHIP;100ohm,5%,1/10W,TP,1608	1	SA
....4	R3077	2007-000074	R-CHIP;100ohm,5%,1/10W,TP,1608	1	SA
....4	R3078	2007-000074	R-CHIP;100ohm,5%,1/10W,TP,1608	1	SA
....4	R3125	2007-000074	R-CHIP;100ohm,5%,1/10W,TP,1608	1	SA
....4	R3127	2007-000074	R-CHIP;100ohm,5%,1/10W,TP,1608	1	SA
....4	R3135	2007-000074	R-CHIP;100ohm,5%,1/10W,TP,1608	1	SA
....4	R4028	2007-000074	R-CHIP;100ohm,5%,1/10W,TP,1608	1	SA
....4	R4038	2007-000074	R-CHIP;100ohm,5%,1/10W,TP,1608	1	SA
....4	R4049	2007-000074	R-CHIP;100ohm,5%,1/10W,TP,1608	1	SA
....4	R4050	2007-000074	R-CHIP;100ohm,5%,1/10W,TP,1608	1	SA
....4	R4097	2007-000074	R-CHIP;100ohm,5%,1/10W,TP,1608	1	SA
....4	R4102	2007-000074	R-CHIP;100ohm,5%,1/10W,TP,1608	1	SA
....4	R4120	2007-000074	R-CHIP;100ohm,5%,1/10W,TP,1608	1	SA
....4	R5010	2007-000074	R-CHIP;100ohm,5%,1/10W,TP,1608	1	SA
....4	R5066	2007-000074	R-CHIP;100ohm,5%,1/10W,TP,1608	1	SA
....4	R5069	2007-000074	R-CHIP;100ohm,5%,1/10W,TP,1608	1	SA
....4	R2001	2007-000076	R-CHIP;330ohm,5%,1/10W,TP,1608	1	SA
....4	R2005	2007-000076	R-CHIP;330ohm,5%,1/10W,TP,1608	1	SA
....4	R2035	2007-000076	R-CHIP;330ohm,5%,1/10W,TP,1608	1	SA
....4	R2040	2007-000076	R-CHIP;330ohm,5%,1/10W,TP,1608	1	SA
....4	R1098	2007-000077	R-CHIP;470ohm,5%,1/10W,TP,1608	1	SA
....4	R2004	2007-000077	R-CHIP;470ohm,5%,1/10W,TP,1608	1	SA
....4	R2006	2007-000077	R-CHIP;470ohm,5%,1/10W,TP,1608	1	SA
....4	R2033	2007-000077	R-CHIP;470ohm,5%,1/10W,TP,1608	1	SA
....4	R2034	2007-000077	R-CHIP;470ohm,5%,1/10W,TP,1608	1	SA
....4	R2037	2007-000077	R-CHIP;470ohm,5%,1/10W,TP,1608	1	SA
....4	R2039	2007-000077	R-CHIP;470ohm,5%,1/10W,TP,1608	1	SA
....4	R2042	2007-000077	R-CHIP;470ohm,5%,1/10W,TP,1608	1	SA
....4	R2043	2007-000077	R-CHIP;470ohm,5%,1/10W,TP,1608	1	SA
....4	R2074	2007-000077	R-CHIP;470ohm,5%,1/10W,TP,1608	1	SA
....4	R2075	2007-000077	R-CHIP;470ohm,5%,1/10W,TP,1608	1	SA
....4	R2077	2007-000077	R-CHIP;470ohm,5%,1/10W,TP,1608	1	SA
....4	R2079	2007-000077	R-CHIP;470ohm,5%,1/10W,TP,1608	1	SA

ELECTRONIC SERVICE TIRGOVISTE

Level	Loc. No.	Code No.	Description & Specification	Q'ty	SA/SNA
....4	R3128	2007-000077	R-CHIP;470ohm,5%,1/10W,TP,1608	1	SA
....4	R3133	2007-000077	R-CHIP;470ohm,5%,1/10W,TP,1608	1	SA
....4	R4030	2007-000077	R-CHIP;470ohm,5%,1/10W,TP,1608	1	SA
....4	R4031	2007-000077	R-CHIP;470ohm,5%,1/10W,TP,1608	1	SA
....4	R4099	2007-000077	R-CHIP;470ohm,5%,1/10W,TP,1608	1	SA
....4	R5091	2007-000077	R-CHIP;470ohm,5%,1/10W,TP,1608	1	SA
....4	R5093	2007-000077	R-CHIP;470ohm,5%,1/10W,TP,1608	1	SA
....4	R1074	2007-000078	R-CHIP;1Kohm,5%,1/10W,TP,1608	1	SA
....4	R2009	2007-000078	R-CHIP;1Kohm,5%,1/10W,TP,1608	1	SA
....4	R2016	2007-000078	R-CHIP;1Kohm,5%,1/10W,TP,1608	1	SA
....4	R3001	2007-000078	R-CHIP;1Kohm,5%,1/10W,TP,1608	1	SA
....4	R3030	2007-000078	R-CHIP;1Kohm,5%,1/10W,TP,1608	1	SA
....4	R3121	2007-000078	R-CHIP;1Kohm,5%,1/10W,TP,1608	1	SA
....4	R3138	2007-000078	R-CHIP;1Kohm,5%,1/10W,TP,1608	1	SA
....4	R3139	2007-000078	R-CHIP;1Kohm,5%,1/10W,TP,1608	1	SA
....4	R4025	2007-000078	R-CHIP;1Kohm,5%,1/10W,TP,1608	1	SA
....4	R4026	2007-000078	R-CHIP;1Kohm,5%,1/10W,TP,1608	1	SA
....4	R4027	2007-000078	R-CHIP;1Kohm,5%,1/10W,TP,1608	1	SA
....4	R4034	2007-000078	R-CHIP;1Kohm,5%,1/10W,TP,1608	1	SA
....4	R4053	2007-000078	R-CHIP;1Kohm,5%,1/10W,TP,1608	1	SA
....4	R4096	2007-000078	R-CHIP;1Kohm,5%,1/10W,TP,1608	1	SA
....4	R4103	2007-000078	R-CHIP;1Kohm,5%,1/10W,TP,1608	1	SA
....4	R5043	2007-000078	R-CHIP;1Kohm,5%,1/10W,TP,1608	1	SA
....4	R3016	2007-000082	R-CHIP;3.3Kohm,5%,1/10W,TP,1608	1	SA
....4	R3017	2007-000082	R-CHIP;3.3Kohm,5%,1/10W,TP,1608	1	SA
....4	R3071	2007-000082	R-CHIP;3.3Kohm,5%,1/10W,TP,1608	1	SA
....4	R3072	2007-000082	R-CHIP;3.3Kohm,5%,1/10W,TP,1608	1	SA
....4	R4100	2007-000082	R-CHIP;3.3Kohm,5%,1/10W,TP,1608	1	SA
....4	R4101	2007-000082	R-CHIP;3.3Kohm,5%,1/10W,TP,1608	1	SA
....4	R1031	2007-000084	R-CHIP;4.7Kohm,5%,1/10W,TP,1608	1	SA
....4	R1035	2007-000084	R-CHIP;4.7Kohm,5%,1/10W,TP,1608	1	SA
....4	R1058	2007-000084	R-CHIP;4.7Kohm,5%,1/10W,TP,1608	1	SA
....4	R1060	2007-000084	R-CHIP;4.7Kohm,5%,1/10W,TP,1608	1	SA
....4	R1082	2007-000084	R-CHIP;4.7Kohm,5%,1/10W,TP,1608	1	SA
....4	R3002	2007-000084	R-CHIP;4.7Kohm,5%,1/10W,TP,1608	1	SA
....4	R3014	2007-000084	R-CHIP;4.7Kohm,5%,1/10W,TP,1608	1	SA
....4	R3015	2007-000084	R-CHIP;4.7Kohm,5%,1/10W,TP,1608	1	SA
....4	R3018	2007-000084	R-CHIP;4.7Kohm,5%,1/10W,TP,1608	1	SA
....4	R3020	2007-000084	R-CHIP;4.7Kohm,5%,1/10W,TP,1608	1	SA
....4	R3021	2007-000084	R-CHIP;4.7Kohm,5%,1/10W,TP,1608	1	SA
....4	R3022	2007-000084	R-CHIP;4.7Kohm,5%,1/10W,TP,1608	1	SA
....4	R3036	2007-000084	R-CHIP;4.7Kohm,5%,1/10W,TP,1608	1	SA
....4	R3038	2007-000084	R-CHIP;4.7Kohm,5%,1/10W,TP,1608	1	SA
....4	R3070	2007-000084	R-CHIP;4.7Kohm,5%,1/10W,TP,1608	1	SA
....4	R3079	2007-000084	R-CHIP;4.7Kohm,5%,1/10W,TP,1608	1	SA
....4	R3080	2007-000084	R-CHIP;4.7Kohm,5%,1/10W,TP,1608	1	SA
....4	R3081	2007-000084	R-CHIP;4.7Kohm,5%,1/10W,TP,1608	1	SA
....4	R3082	2007-000084	R-CHIP;4.7Kohm,5%,1/10W,TP,1608	1	SA
....4	R3086	2007-000084	R-CHIP;4.7Kohm,5%,1/10W,TP,1608	1	SA
....4	R3087	2007-000084	R-CHIP;4.7Kohm,5%,1/10W,TP,1608	1	SA
....4	R3108	2007-000084	R-CHIP;4.7Kohm,5%,1/10W,TP,1608	1	SA
....4	R3109	2007-000084	R-CHIP;4.7Kohm,5%,1/10W,TP,1608	1	SA
....4	R3110	2007-000084	R-CHIP;4.7Kohm,5%,1/10W,TP,1608	1	SA
....4	R3111	2007-000084	R-CHIP;4.7Kohm,5%,1/10W,TP,1608	1	SA
....4	R3112	2007-000084	R-CHIP;4.7Kohm,5%,1/10W,TP,1608	1	SA
....4	R3113	2007-000084	R-CHIP;4.7Kohm,5%,1/10W,TP,1608	1	SA
....4	R3114	2007-000084	R-CHIP;4.7Kohm,5%,1/10W,TP,1608	1	SA
....4	R3116	2007-000084	R-CHIP;4.7Kohm,5%,1/10W,TP,1608	1	SA
....4	R3129	2007-000084	R-CHIP;4.7Kohm,5%,1/10W,TP,1608	1	SA
....4	R3134	2007-000084	R-CHIP;4.7Kohm,5%,1/10W,TP,1608	1	SA

ELECTRONIC SERVICE TIRGOVISTE

Level	Loc. No.	Code No.	Description & Specification	Q'ty	SA/SNA
....4	R3137	2007-000084	R-CHIP;4.7Kohm,5%,1/10W,TP,1608	1	SA
....4	R4036	2007-000084	R-CHIP;4.7Kohm,5%,1/10W,TP,1608	1	SA
....4	R4037	2007-000084	R-CHIP;4.7Kohm,5%,1/10W,TP,1608	1	SA
....4	R4098	2007-000084	R-CHIP;4.7Kohm,5%,1/10W,TP,1608	1	SA
....4	R4123	2007-000084	R-CHIP;4.7Kohm,5%,1/10W,TP,1608	1	SA
....4	R5064	2007-000084	R-CHIP;4.7Kohm,5%,1/10W,TP,1608	1	SA
....4	R5119	2007-000084	R-CHIP;4.7Kohm,5%,1/10W,TP,1608	1	SA
....4	R2028	2007-000087	R-CHIP;6.8Kohm,5%,1/10W,TP,1608	1	SA
....4	R2061	2007-000087	R-CHIP;6.8Kohm,5%,1/10W,TP,1608	1	SA
....4	R1015	2007-000090	R-CHIP;10Kohm,5%,1/10W,TP,1608	1	SA
....4	R1016	2007-000090	R-CHIP;10Kohm,5%,1/10W,TP,1608	1	SA
....4	R1038	2007-000090	R-CHIP;10Kohm,5%,1/10W,TP,1608	1	SA
....4	R1039	2007-000090	R-CHIP;10Kohm,5%,1/10W,TP,1608	1	SA
....4	R1041	2007-000090	R-CHIP;10Kohm,5%,1/10W,TP,1608	1	SA
....4	R1051	2007-000090	R-CHIP;10Kohm,5%,1/10W,TP,1608	1	SA
....4	R1067	2007-000090	R-CHIP;10Kohm,5%,1/10W,TP,1608	1	SA
....4	R1080	2007-000090	R-CHIP;10Kohm,5%,1/10W,TP,1608	1	SA
....4	R1101	2007-000090	R-CHIP;10Kohm,5%,1/10W,TP,1608	1	SA
....4	R1102	2007-000090	R-CHIP;10Kohm,5%,1/10W,TP,1608	1	SA
....4	R1103	2007-000090	R-CHIP;10Kohm,5%,1/10W,TP,1608	1	SA
....4	R1104	2007-000090	R-CHIP;10Kohm,5%,1/10W,TP,1608	1	SA
....4	R1105	2007-000090	R-CHIP;10Kohm,5%,1/10W,TP,1608	1	SA
....4	R2002	2007-000090	R-CHIP;10Kohm,5%,1/10W,TP,1608	1	SA
....4	R2003	2007-000090	R-CHIP;10Kohm,5%,1/10W,TP,1608	1	SA
....4	R2013	2007-000090	R-CHIP;10Kohm,5%,1/10W,TP,1608	1	SA
....4	R2044	2007-000090	R-CHIP;10Kohm,5%,1/10W,TP,1608	1	SA
....4	R2045	2007-000090	R-CHIP;10Kohm,5%,1/10W,TP,1608	1	SA
....4	R2057	2007-000090	R-CHIP;10Kohm,5%,1/10W,TP,1608	1	SA
....4	R2065	2007-000090	R-CHIP;10Kohm,5%,1/10W,TP,1608	1	SA
....4	R3005	2007-000090	R-CHIP;10Kohm,5%,1/10W,TP,1608	1	SA
....4	R3006	2007-000090	R-CHIP;10Kohm,5%,1/10W,TP,1608	1	SA
....4	R3007	2007-000090	R-CHIP;10Kohm,5%,1/10W,TP,1608	1	SA
....4	R3075	2007-000090	R-CHIP;10Kohm,5%,1/10W,TP,1608	1	SA
....4	R3076	2007-000090	R-CHIP;10Kohm,5%,1/10W,TP,1608	1	SA
....4	R3083	2007-000090	R-CHIP;10Kohm,5%,1/10W,TP,1608	1	SA
....4	R3084	2007-000090	R-CHIP;10Kohm,5%,1/10W,TP,1608	1	SA
....4	R3085	2007-000090	R-CHIP;10Kohm,5%,1/10W,TP,1608	1	SA
....4	R3131	2007-000090	R-CHIP;10Kohm,5%,1/10W,TP,1608	1	SA
....4	R3140	2007-000090	R-CHIP;10Kohm,5%,1/10W,TP,1608	1	SA
....4	R4118	2007-000090	R-CHIP;10Kohm,5%,1/10W,TP,1608	1	SA
....4	R4119	2007-000090	R-CHIP;10Kohm,5%,1/10W,TP,1608	1	SA
....4	R5004	2007-000090	R-CHIP;10Kohm,5%,1/10W,TP,1608	1	SA
....4	R5044	2007-000090	R-CHIP;10Kohm,5%,1/10W,TP,1608	1	SA
....4	R1070	2007-000093	R-CHIP;20Kohm,5%,1/10W,TP,1608	1	SA
....4	R1071	2007-000093	R-CHIP;20Kohm,5%,1/10W,TP,1608	1	SA
....4	R3004	2007-000094	R-CHIP;22Kohm,5%,1/10W,TP,1608	1	SA
....4	R1062	2007-000097	R-CHIP;47Kohm,5%,1/10W,TP,1608	1	SA
....4	R1068	2007-000097	R-CHIP;47Kohm,5%,1/10W,TP,1608	1	SA
....4	R1075	2007-000097	R-CHIP;47Kohm,5%,1/10W,TP,1608	1	SA
....4	R1079	2007-000097	R-CHIP;47Kohm,5%,1/10W,TP,1608	1	SA
....4	R2010	2007-000097	R-CHIP;47Kohm,5%,1/10W,TP,1608	1	SA
....4	R2011	2007-000097	R-CHIP;47Kohm,5%,1/10W,TP,1608	1	SA
....4	R2012	2007-000097	R-CHIP;47Kohm,5%,1/10W,TP,1608	1	SA
....4	R3099	2007-000097	R-CHIP;47Kohm,5%,1/10W,TP,1608	1	SA
....4	R1001	2007-000100	R-CHIP;68Kohm,5%,1/10W,TP,1608	1	SA
....4	R1002	2007-000100	R-CHIP;68Kohm,5%,1/10W,TP,1608	1	SA
....4	R1003	2007-000100	R-CHIP;68Kohm,5%,1/10W,TP,1608	1	SA
....4	R1004	2007-000100	R-CHIP;68Kohm,5%,1/10W,TP,1608	1	SA
....4	R1005	2007-000100	R-CHIP;68Kohm,5%,1/10W,TP,1608	1	SA
....4	R1006	2007-000100	R-CHIP;68Kohm,5%,1/10W,TP,1608	1	SA

ELECTRONIC SERVICE TIRGOVISTE

Level	Loc. No.	Code No.	Description & Specification	Q'ty	SA/SNA
....4	R1007	2007-000100	R-CHIP;68Kohm,5%,1/10W,TP,1608	1	SA
....4	R1008	2007-000100	R-CHIP;68Kohm,5%,1/10W,TP,1608	1	SA
....4	R1019	2007-000100	R-CHIP;68Kohm,5%,1/10W,TP,1608	1	SA
....4	R1020	2007-000100	R-CHIP;68Kohm,5%,1/10W,TP,1608	1	SA
....4	R1021	2007-000100	R-CHIP;68Kohm,5%,1/10W,TP,1608	1	SA
....4	R1022	2007-000100	R-CHIP;68Kohm,5%,1/10W,TP,1608	1	SA
....4	R1023	2007-000100	R-CHIP;68Kohm,5%,1/10W,TP,1608	1	SA
....4	R1024	2007-000100	R-CHIP;68Kohm,5%,1/10W,TP,1608	1	SA
....4	R1025	2007-000100	R-CHIP;68Kohm,5%,1/10W,TP,1608	1	SA
....4	R1026	2007-000100	R-CHIP;68Kohm,5%,1/10W,TP,1608	1	SA
....4	R1027	2007-000100	R-CHIP;68Kohm,5%,1/10W,TP,1608	1	SA
....4	R1028	2007-000100	R-CHIP;68Kohm,5%,1/10W,TP,1608	1	SA
....4	R1029	2007-000100	R-CHIP;68Kohm,5%,1/10W,TP,1608	1	SA
....4	R1030	2007-000100	R-CHIP;68Kohm,5%,1/10W,TP,1608	1	SA
....4	R1043	2007-000100	R-CHIP;68Kohm,5%,1/10W,TP,1608	1	SA
....4	R1044	2007-000100	R-CHIP;68Kohm,5%,1/10W,TP,1608	1	SA
....4	R1045	2007-000100	R-CHIP;68Kohm,5%,1/10W,TP,1608	1	SA
....4	R1046	2007-000100	R-CHIP;68Kohm,5%,1/10W,TP,1608	1	SA
....4	R1034	2007-000102	R-CHIP;100Kohm,5%,1/10W,TP,1608	1	SA
....4	R1064	2007-000102	R-CHIP;100Kohm,5%,1/10W,TP,1608	1	SA
....4	R1065	2007-000102	R-CHIP;100Kohm,5%,1/10W,TP,1608	1	SA
....4	R1069	2007-000102	R-CHIP;100Kohm,5%,1/10W,TP,1608	1	SA
....4	R1072	2007-000102	R-CHIP;100Kohm,5%,1/10W,TP,1608	1	SA
....4	R1073	2007-000107	R-CHIP;470Kohm,5%,1/10W,TP,1608	1	SA
....4	R4021	2007-000113	R-CHIP;33ohm,5%,1/10W,TP,1608	1	SA
....4	R4022	2007-000113	R-CHIP;33ohm,5%,1/10W,TP,1608	1	SA
....4	R4023	2007-000113	R-CHIP;33ohm,5%,1/10W,TP,1608	1	SA
....4	R4024	2007-000113	R-CHIP;33ohm,5%,1/10W,TP,1608	1	SA
....4	R1036	2007-000119	R-CHIP;560ohm,5%,1/10W,TP,1608	1	SA
....4	R1078	2007-000122	R-CHIP;1.2Kohm,5%,1/10W,TP,1608	1	SA
....4	R5053	2007-000123	R-CHIP;1.5Kohm,5%,1/10W,TP,1608	1	SA
....4	R5054	2007-000123	R-CHIP;1.5Kohm,5%,1/10W,TP,1608	1	SA
....4	R5055	2007-000123	R-CHIP;1.5Kohm,5%,1/10W,TP,1608	1	SA
....4	R1096	2007-000125	R-CHIP;3.9Kohm,5%,1/10W,TP,1608	1	SA
....4	R1076	2007-000129	R-CHIP;27Kohm,5%,1/10W,TP,1608	1	SA
....4	R5015	2007-000133	R-CHIP;330Kohm,5%,1/10W,TP,1608	1	SA
....4	R2098	2007-000309	R-CHIP;10ohm,5%,1/10W,TP,1608	1	SA
....4	R2099	2007-000309	R-CHIP;10ohm,5%,1/10W,TP,1608	1	SA
....4	R2100	2007-000309	R-CHIP;10ohm,5%,1/10W,TP,1608	1	SA
....4	R2101	2007-000309	R-CHIP;10ohm,5%,1/10W,TP,1608	1	SA
....4	R2102	2007-000309	R-CHIP;10ohm,5%,1/10W,TP,1608	1	SA
....4	R2103	2007-000309	R-CHIP;10ohm,5%,1/10W,TP,1608	1	SA
....4	R2104	2007-000309	R-CHIP;10ohm,5%,1/10W,TP,1608	1	SA
....4	R2105	2007-000309	R-CHIP;10ohm,5%,1/10W,TP,1608	1	SA
....4	R3044	2007-000309	R-CHIP;10ohm,5%,1/10W,TP,1608	1	SA
....4	R3048	2007-000309	R-CHIP;10ohm,5%,1/10W,TP,1608	1	SA
....4	R3049_1M	2007-000309	R-CHIP;10ohm,5%,1/10W,TP,1608	1	SA
....4	R3050_1M	2007-000309	R-CHIP;10ohm,5%,1/10W,TP,1608	1	SA
....4	R3056	2007-000309	R-CHIP;10ohm,5%,1/10W,TP,1608	1	SA
....4	R3060	2007-000309	R-CHIP;10ohm,5%,1/10W,TP,1608	1	SA
....4	R3061	2007-000309	R-CHIP;10ohm,5%,1/10W,TP,1608	1	SA
....4	R3064	2007-000309	R-CHIP;10ohm,5%,1/10W,TP,1608	1	SA
....4	R3066	2007-000309	R-CHIP;10ohm,5%,1/10W,TP,1608	1	SA
....4	R3067	2007-000309	R-CHIP;10ohm,5%,1/10W,TP,1608	1	SA
....4	R3068	2007-000309	R-CHIP;10ohm,5%,1/10W,TP,1608	1	SA
....4	R3069	2007-000309	R-CHIP;10ohm,5%,1/10W,TP,1608	1	SA
....4	R3091	2007-000309	R-CHIP;10ohm,5%,1/10W,TP,1608	1	SA
....4	R3092	2007-000309	R-CHIP;10ohm,5%,1/10W,TP,1608	1	SA
....4	R3093	2007-000309	R-CHIP;10ohm,5%,1/10W,TP,1608	1	SA
....4	R3094	2007-000309	R-CHIP;10ohm,5%,1/10W,TP,1608	1	SA

ELECTRONIC SERVICE TIRGOVISTE

Level	Loc. No.	Code No.	Description & Specification	Q'ty	SA/SNA
....4	R3095	2007-000309	R-CHIP;10ohm,5%,1/10W,TP,1608	1	SA
....4	R3096	2007-000309	R-CHIP;10ohm,5%,1/10W,TP,1608	1	SA
....4	R3097	2007-000309	R-CHIP;10ohm,5%,1/10W,TP,1608	1	SA
....4	R3098	2007-000309	R-CHIP;10ohm,5%,1/10W,TP,1608	1	SA
....4	R5045	2007-000309	R-CHIP;10ohm,5%,1/10W,TP,1608	1	SA
....4	R5046	2007-000309	R-CHIP;10ohm,5%,1/10W,TP,1608	1	SA
....4	R5047	2007-000309	R-CHIP;10ohm,5%,1/10W,TP,1608	1	SA
....4	R2017	2007-000458	R-CHIP;18Kohm,5%,1/10W,TP,1608	1	SA
....4	R2052	2007-000458	R-CHIP;18Kohm,5%,1/10W,TP,1608	1	SA
....4	R3012	2007-000704	R-CHIP;3.6Kohm,5%,1/10W,TP,1608	1	SA
....4	R3013	2007-000704	R-CHIP;3.6Kohm,5%,1/10W,TP,1608	1	SA
....4	R1077	2007-000708	R-CHIP;3.9Kohm,1%,1/10W,TP,1608	1	SA
....4	R2019	2007-000950	R-CHIP;47ohm,5%,1/4W,TP,3216	1	SA
....4	R2020	2007-000950	R-CHIP;47ohm,5%,1/4W,TP,3216	1	SA
....4	R2021	2007-000950	R-CHIP;47ohm,5%,1/4W,TP,3216	1	SA
....4	R2066	2007-000950	R-CHIP;47ohm,5%,1/4W,TP,3216	1	SA
....4	R2067	2007-000950	R-CHIP;47ohm,5%,1/4W,TP,3216	1	SA
....4	R2076	2007-000950	R-CHIP;47ohm,5%,1/4W,TP,3216	1	SA
....4	R2078	2007-000950	R-CHIP;47ohm,5%,1/4W,TP,3216	1	SA
....4	R2082	2007-000950	R-CHIP;47ohm,5%,1/4W,TP,3216	1	SA
....4	R2083	2007-000950	R-CHIP;47ohm,5%,1/4W,TP,3216	1	SA
....4	R2094	2007-000950	R-CHIP;47ohm,5%,1/4W,TP,3216	1	SA
....4	R2095	2007-000950	R-CHIP;47ohm,5%,1/4W,TP,3216	1	SA
....4	R5035	2007-001014	R-CHIP;51OHM,5%,1/10W,TP,1608	1	SA
....4	R5039	2007-001014	R-CHIP;51OHM,5%,1/10W,TP,1608	1	SA
....4	R2014	2007-001164	R-CHIP;75ohm,1%,1/10W,TP,1608	1	SA
....4	R2015	2007-001164	R-CHIP;75ohm,1%,1/10W,TP,1608	1	SA
....4	R2025	2007-001164	R-CHIP;75ohm,1%,1/10W,TP,1608	1	SA
....4	R2026	2007-001164	R-CHIP;75ohm,1%,1/10W,TP,1608	1	SA
....4	R2027	2007-001164	R-CHIP;75ohm,1%,1/10W,TP,1608	1	SA
....4	R2032	2007-001164	R-CHIP;75ohm,1%,1/10W,TP,1608	1	SA
....4	R2062	2007-001164	R-CHIP;75ohm,1%,1/10W,TP,1608	1	SA
....4	R2085	2007-001164	R-CHIP;75ohm,1%,1/10W,TP,1608	1	SA
....4	R2086	2007-001164	R-CHIP;75ohm,1%,1/10W,TP,1608	1	SA
....4	R2087	2007-001164	R-CHIP;75ohm,1%,1/10W,TP,1608	1	SA
....4	R2036	2007-001167	R-CHIP;75ohm,5%,1/10W,TP,1608	1	SA
....4	R2038	2007-001167	R-CHIP;75ohm,5%,1/10W,TP,1608	1	SA
....4	R2041	2007-001167	R-CHIP;75ohm,5%,1/10W,TP,1608	1	SA
....4	R2046	2007-001167	R-CHIP;75ohm,5%,1/10W,TP,1608	1	SA
....4	R2047	2007-001167	R-CHIP;75ohm,5%,1/10W,TP,1608	1	SA
....4	R2048	2007-001167	R-CHIP;75ohm,5%,1/10W,TP,1608	1	SA
....4	R2054	2007-001167	R-CHIP;75ohm,5%,1/10W,TP,1608	1	SA
....4	R2059	2007-001167	R-CHIP;75ohm,5%,1/10W,TP,1608	1	SA
....4	R5016	2007-001167	R-CHIP;75ohm,5%,1/10W,TP,1608	1	SA
....4	R1083	2007-008720	R-CHIP;4.7ohm,1%,1/4W,TP,3216	1	SA
....4	R1088	2007-008720	R-CHIP;4.7ohm,1%,1/4W,TP,3216	1	SA
....4	R1094	2007-008720	R-CHIP;4.7ohm,1%,1/4W,TP,3216	1	SA
....4	R1097	2007-008720	R-CHIP;4.7ohm,1%,1/4W,TP,3216	1	SA
....4	RA5001	2011-000585	R-NET;47ohm,5%,1/16W,L,CHIP,8P,TP,3.2x1.	1	SA
....4	RA5002	2011-000585	R-NET;47ohm,5%,1/16W,L,CHIP,8P,TP,3.2x1.	1	SA
....4	RA5003	2011-000585	R-NET;47ohm,5%,1/16W,L,CHIP,8P,TP,3.2x1.	1	SA
....4	RA5004	2011-000585	R-NET;47ohm,5%,1/16W,L,CHIP,8P,TP,3.2x1.	1	SA
....4	RA5005	2011-000585	R-NET;47ohm,5%,1/16W,L,CHIP,8P,TP,3.2x1.	1	SA
....4	RA5006	2011-000585	R-NET;47ohm,5%,1/16W,L,CHIP,8P,TP,3.2x1.	1	SA
....4	RA5007	2011-000585	R-NET;47ohm,5%,1/16W,L,CHIP,8P,TP,3.2x1.	1	SA
....4	RA5010	2011-000585	R-NET;47ohm,5%,1/16W,L,CHIP,8P,TP,3.2x1.	1	SA
....4	RA3004	2011-000651	R-NET;10ohm,5%,1/16W,L,CHIP,8P,TP,3216	1	SA
....4	RA3005	2011-000651	R-NET;10ohm,5%,1/16W,L,CHIP,8P,TP,3216	1	SA
....4	RA3007	2011-000651	R-NET;10ohm,5%,1/16W,L,CHIP,8P,TP,3216	1	SA
....4	RA3008	2011-000651	R-NET;10ohm,5%,1/16W,L,CHIP,8P,TP,3216	1	SA

ELECTRONIC SERVICE TIRGOVISTE

Level	Loc. No.	Code No.	Description & Specification	Q'ty	SA/SNA
....4	RA3009	2011-000651	R-NET;10ohm,5%,1/16W,L,CHIP,8P,TP,3216	1	SA
....4	RA3011	2011-000651	R-NET;10ohm,5%,1/16W,L,CHIP,8P,TP,3216	1	SA
....4	RA3001	2011-001093	R-NET;100OHM,5%,1/16W,L,CHIP,8P,TP,3216	1	SA
....4	RA3002	2011-001093	R-NET;100OHM,5%,1/16W,L,CHIP,8P,TP,3216	1	SA
....4	RA3003	2011-001093	R-NET;100OHM,5%,1/16W,L,CHIP,8P,TP,3216	1	SA
....4	RA3006	2011-001093	R-NET;100OHM,5%,1/16W,L,CHIP,8P,TP,3216	1	SA
....4	RA3010	2011-001093	R-NET;100OHM,5%,1/16W,L,CHIP,8P,TP,3216	1	SA
....4	RA3012	2011-001093	R-NET;100OHM,5%,1/16W,L,CHIP,8P,TP,3216	1	SA
....4	RA3013	2011-001093	R-NET;100OHM,5%,1/16W,L,CHIP,8P,TP,3216	1	SA
....4	RA3014	2011-001093	R-NET;100OHM,5%,1/16W,L,CHIP,8P,TP,3216	1	SA
....4	RA3015	2011-001093	R-NET;100OHM,5%,1/16W,L,CHIP,8P,TP,3216	1	SA
....4	RA3016	2011-001093	R-NET;100OHM,5%,1/16W,L,CHIP,8P,TP,3216	1	SA
....4	RA3017	2011-001093	R-NET;100OHM,5%,1/16W,L,CHIP,8P,TP,3216	1	SA
....4	RA3018	2011-001093	R-NET;100OHM,5%,1/16W,L,CHIP,8P,TP,3216	1	SA
....4	RA3019	2011-001093	R-NET;100OHM,5%,1/16W,L,CHIP,8P,TP,3216	1	SA
....4	RA3020	2011-001093	R-NET;100OHM,5%,1/16W,L,CHIP,8P,TP,3216	1	SA
....4	RA4001	2011-001093	R-NET;100OHM,5%,1/16W,L,CHIP,8P,TP,3216	1	SA
....4	RA4002	2011-001093	R-NET;100OHM,5%,1/16W,L,CHIP,8P,TP,3216	1	SA
....4	C1158	2203-000125	C-CER,CHIP;1.2nF,10%,50V,X7R,TP,1608,-	1	SA
....4	C1037	2203-000140	C-CER,CHIP;1.5nF,10%,50V,X7R,1608	1	SA
....4	C1062	2203-000140	C-CER,CHIP;1.5nF,10%,50V,X7R,1608	1	SA
....4	C1004	2203-000189	C-CER,CHIP;100nF,+80-20%,25V,Y5V,1608	1	SA
....4	C1006	2203-000189	C-CER,CHIP;100nF,+80-20%,25V,Y5V,1608	1	SA
....4	C1008	2203-000189	C-CER,CHIP;100nF,+80-20%,25V,Y5V,1608	1	SA
....4	C1016	2203-000189	C-CER,CHIP;100nF,+80-20%,25V,Y5V,1608	1	SA
....4	C1021	2203-000189	C-CER,CHIP;100nF,+80-20%,25V,Y5V,1608	1	SA
....4	C1025	2203-000189	C-CER,CHIP;100nF,+80-20%,25V,Y5V,1608	1	SA
....4	C1027	2203-000189	C-CER,CHIP;100nF,+80-20%,25V,Y5V,1608	1	SA
....4	C1043	2203-000189	C-CER,CHIP;100nF,+80-20%,25V,Y5V,1608	1	SA
....4	C1046	2203-000189	C-CER,CHIP;100nF,+80-20%,25V,Y5V,1608	1	SA
....4	C1052	2203-000189	C-CER,CHIP;100nF,+80-20%,25V,Y5V,1608	1	SA
....4	C1053	2203-000189	C-CER,CHIP;100nF,+80-20%,25V,Y5V,1608	1	SA
....4	C1054	2203-000189	C-CER,CHIP;100nF,+80-20%,25V,Y5V,1608	1	SA
....4	C1055	2203-000189	C-CER,CHIP;100nF,+80-20%,25V,Y5V,1608	1	SA
....4	C1075	2203-000189	C-CER,CHIP;100nF,+80-20%,25V,Y5V,1608	1	SA
....4	C1084	2203-000189	C-CER,CHIP;100nF,+80-20%,25V,Y5V,1608	1	SA
....4	C1086	2203-000189	C-CER,CHIP;100nF,+80-20%,25V,Y5V,1608	1	SA
....4	C1087	2203-000189	C-CER,CHIP;100nF,+80-20%,25V,Y5V,1608	1	SA
....4	C1097	2203-000189	C-CER,CHIP;100nF,+80-20%,25V,Y5V,1608	1	SA
....4	C1098	2203-000189	C-CER,CHIP;100nF,+80-20%,25V,Y5V,1608	1	SA
....4	C1103	2203-000189	C-CER,CHIP;100nF,+80-20%,25V,Y5V,1608	1	SA
....4	C1105	2203-000189	C-CER,CHIP;100nF,+80-20%,25V,Y5V,1608	1	SA
....4	C1109	2203-000189	C-CER,CHIP;100nF,+80-20%,25V,Y5V,1608	1	SA
....4	C1124	2203-000189	C-CER,CHIP;100nF,+80-20%,25V,Y5V,1608	1	SA
....4	C1132	2203-000189	C-CER,CHIP;100nF,+80-20%,25V,Y5V,1608	1	SA
....4	C1133	2203-000189	C-CER,CHIP;100nF,+80-20%,25V,Y5V,1608	1	SA
....4	C1141	2203-000189	C-CER,CHIP;100nF,+80-20%,25V,Y5V,1608	1	SA
....4	C1159	2203-000189	C-CER,CHIP;100nF,+80-20%,25V,Y5V,1608	1	SA
....4	C1168	2203-000189	C-CER,CHIP;100nF,+80-20%,25V,Y5V,1608	1	SA
....4	C2002	2203-000189	C-CER,CHIP;100nF,+80-20%,25V,Y5V,1608	1	SA
....4	C2018	2203-000189	C-CER,CHIP;100nF,+80-20%,25V,Y5V,1608	1	SA
....4	C3001	2203-000189	C-CER,CHIP;100nF,+80-20%,25V,Y5V,1608	1	SA
....4	C3005	2203-000189	C-CER,CHIP;100nF,+80-20%,25V,Y5V,1608	1	SA
....4	C3034	2203-000189	C-CER,CHIP;100nF,+80-20%,25V,Y5V,1608	1	SA
....4	C4016	2203-000189	C-CER,CHIP;100nF,+80-20%,25V,Y5V,1608	1	SA
....4	C4017	2203-000189	C-CER,CHIP;100nF,+80-20%,25V,Y5V,1608	1	SA
....4	C4018	2203-000189	C-CER,CHIP;100nF,+80-20%,25V,Y5V,1608	1	SA
....4	C4019	2203-000189	C-CER,CHIP;100nF,+80-20%,25V,Y5V,1608	1	SA
....4	C4020	2203-000189	C-CER,CHIP;100nF,+80-20%,25V,Y5V,1608	1	SA
....4	C4021	2203-000189	C-CER,CHIP;100nF,+80-20%,25V,Y5V,1608	1	SA

ELECTRONIC SERVICE TIRGOVISTE

Level	Loc. No.	Code No.	Description & Specification	Q'ty	SA/SNA
....4	C4022	2203-000189	C-CER,CHIP;100nF,+80-20%,25V,Y5V,1608	1	SA
....4	C4025	2203-000189	C-CER,CHIP;100nF,+80-20%,25V,Y5V,1608	1	SA
....4	C4026	2203-000189	C-CER,CHIP;100nF,+80-20%,25V,Y5V,1608	1	SA
....4	C4027	2203-000189	C-CER,CHIP;100nF,+80-20%,25V,Y5V,1608	1	SA
....4	C4028	2203-000189	C-CER,CHIP;100nF,+80-20%,25V,Y5V,1608	1	SA
....4	C4029	2203-000189	C-CER,CHIP;100nF,+80-20%,25V,Y5V,1608	1	SA
....4	C4031	2203-000189	C-CER,CHIP;100nF,+80-20%,25V,Y5V,1608	1	SA
....4	C4032	2203-000189	C-CER,CHIP;100nF,+80-20%,25V,Y5V,1608	1	SA
....4	C4034	2203-000189	C-CER,CHIP;100nF,+80-20%,25V,Y5V,1608	1	SA
....4	C4035	2203-000189	C-CER,CHIP;100nF,+80-20%,25V,Y5V,1608	1	SA
....4	C4036	2203-000189	C-CER,CHIP;100nF,+80-20%,25V,Y5V,1608	1	SA
....4	C4038	2203-000189	C-CER,CHIP;100nF,+80-20%,25V,Y5V,1608	1	SA
....4	C4039	2203-000189	C-CER,CHIP;100nF,+80-20%,25V,Y5V,1608	1	SA
....4	C4040	2203-000189	C-CER,CHIP;100nF,+80-20%,25V,Y5V,1608	1	SA
....4	C4041	2203-000189	C-CER,CHIP;100nF,+80-20%,25V,Y5V,1608	1	SA
....4	C4042	2203-000189	C-CER,CHIP;100nF,+80-20%,25V,Y5V,1608	1	SA
....4	C4043	2203-000189	C-CER,CHIP;100nF,+80-20%,25V,Y5V,1608	1	SA
....4	C4045	2203-000189	C-CER,CHIP;100nF,+80-20%,25V,Y5V,1608	1	SA
....4	C4046	2203-000189	C-CER,CHIP;100nF,+80-20%,25V,Y5V,1608	1	SA
....4	C4048	2203-000189	C-CER,CHIP;100nF,+80-20%,25V,Y5V,1608	1	SA
....4	C4049	2203-000189	C-CER,CHIP;100nF,+80-20%,25V,Y5V,1608	1	SA
....4	C4052	2203-000189	C-CER,CHIP;100nF,+80-20%,25V,Y5V,1608	1	SA
....4	C4053	2203-000189	C-CER,CHIP;100nF,+80-20%,25V,Y5V,1608	1	SA
....4	C4054	2203-000189	C-CER,CHIP;100nF,+80-20%,25V,Y5V,1608	1	SA
....4	C4055	2203-000189	C-CER,CHIP;100nF,+80-20%,25V,Y5V,1608	1	SA
....4	C4056	2203-000189	C-CER,CHIP;100nF,+80-20%,25V,Y5V,1608	1	SA
....4	C4059	2203-000189	C-CER,CHIP;100nF,+80-20%,25V,Y5V,1608	1	SA
....4	C4060	2203-000189	C-CER,CHIP;100nF,+80-20%,25V,Y5V,1608	1	SA
....4	C4061	2203-000189	C-CER,CHIP;100nF,+80-20%,25V,Y5V,1608	1	SA
....4	C4062	2203-000189	C-CER,CHIP;100nF,+80-20%,25V,Y5V,1608	1	SA
....4	C4063	2203-000189	C-CER,CHIP;100nF,+80-20%,25V,Y5V,1608	1	SA
....4	C4067	2203-000189	C-CER,CHIP;100nF,+80-20%,25V,Y5V,1608	1	SA
....4	C4068	2203-000189	C-CER,CHIP;100nF,+80-20%,25V,Y5V,1608	1	SA
....4	C4069	2203-000189	C-CER,CHIP;100nF,+80-20%,25V,Y5V,1608	1	SA
....4	C4070	2203-000189	C-CER,CHIP;100nF,+80-20%,25V,Y5V,1608	1	SA
....4	C4071	2203-000189	C-CER,CHIP;100nF,+80-20%,25V,Y5V,1608	1	SA
....4	C4073	2203-000189	C-CER,CHIP;100nF,+80-20%,25V,Y5V,1608	1	SA
....4	C4076	2203-000189	C-CER,CHIP;100nF,+80-20%,25V,Y5V,1608	1	SA
....4	C4077	2203-000189	C-CER,CHIP;100nF,+80-20%,25V,Y5V,1608	1	SA
....4	C4080	2203-000189	C-CER,CHIP;100nF,+80-20%,25V,Y5V,1608	1	SA
....4	C4081	2203-000189	C-CER,CHIP;100nF,+80-20%,25V,Y5V,1608	1	SA
....4	C4083	2203-000189	C-CER,CHIP;100nF,+80-20%,25V,Y5V,1608	1	SA
....4	C4084	2203-000189	C-CER,CHIP;100nF,+80-20%,25V,Y5V,1608	1	SA
....4	C4085	2203-000189	C-CER,CHIP;100nF,+80-20%,25V,Y5V,1608	1	SA
....4	C4086	2203-000189	C-CER,CHIP;100nF,+80-20%,25V,Y5V,1608	1	SA
....4	C4095	2203-000189	C-CER,CHIP;100nF,+80-20%,25V,Y5V,1608	1	SA
....4	C4128	2203-000189	C-CER,CHIP;100nF,+80-20%,25V,Y5V,1608	1	SA
....4	C5026	2203-000189	C-CER,CHIP;100nF,+80-20%,25V,Y5V,1608	1	SA
....4	C5038	2203-000189	C-CER,CHIP;100nF,+80-20%,25V,Y5V,1608	1	SA
....4	C5043	2203-000189	C-CER,CHIP;100nF,+80-20%,25V,Y5V,1608	1	SA
....4	C5022	2203-000221	C-CER,CHIP;100nF,20%,50V,Y5V,TP,3216	1	SA
....4	C1050	2203-000236	C-CER,CHIP;0.1nF,5%,50V,C0G,1608	1	SA
....4	C1134	2203-000236	C-CER,CHIP;0.1nF,5%,50V,C0G,1608	1	SA
....4	C1135	2203-000236	C-CER,CHIP;0.1nF,5%,50V,C0G,1608	1	SA
....4	C1161	2203-000236	C-CER,CHIP;0.1nF,5%,50V,C0G,1608	1	SA
....4	C1162	2203-000236	C-CER,CHIP;0.1nF,5%,50V,C0G,1608	1	SA
....4	C1163	2203-000236	C-CER,CHIP;0.1nF,5%,50V,C0G,1608	1	SA
....4	C2003	2203-000236	C-CER,CHIP;0.1nF,5%,50V,C0G,1608	1	SA
....4	C2004	2203-000236	C-CER,CHIP;0.1nF,5%,50V,C0G,1608	1	SA
....4	C2005	2203-000236	C-CER,CHIP;0.1nF,5%,50V,C0G,1608	1	SA

ELECTRONIC SERVICE TIRGOVISTE

Level	Loc. No.	Code No.	Description & Specification	Q'ty	SA/SNA
....4	C2006	2203-000236	C-CER,CHIP;0.1nF,5%,50V,C0G,1608	1	SA
....4	C2007	2203-000236	C-CER,CHIP;0.1nF,5%,50V,C0G,1608	1	SA
....4	C2011	2203-000236	C-CER,CHIP;0.1nF,5%,50V,C0G,1608	1	SA
....4	C2012	2203-000236	C-CER,CHIP;0.1nF,5%,50V,C0G,1608	1	SA
....4	C2013	2203-000236	C-CER,CHIP;0.1nF,5%,50V,C0G,1608	1	SA
....4	C2014	2203-000236	C-CER,CHIP;0.1nF,5%,50V,C0G,1608	1	SA
....4	C2019	2203-000236	C-CER,CHIP;0.1nF,5%,50V,C0G,1608	1	SA
....4	C2020	2203-000236	C-CER,CHIP;0.1nF,5%,50V,C0G,1608	1	SA
....4	C2022_DE	2203-000236	C-CER,CHIP;0.1nF,5%,50V,C0G,1608	1	SA
....4	C2023	2203-000236	C-CER,CHIP;0.1nF,5%,50V,C0G,1608	1	SA
....4	C2024	2203-000236	C-CER,CHIP;0.1nF,5%,50V,C0G,1608	1	SA
....4	C2025	2203-000236	C-CER,CHIP;0.1nF,5%,50V,C0G,1608	1	SA
....4	C2027	2203-000236	C-CER,CHIP;0.1nF,5%,50V,C0G,1608	1	SA
....4	C2028	2203-000236	C-CER,CHIP;0.1nF,5%,50V,C0G,1608	1	SA
....4	C2032_26	2203-000236	C-CER,CHIP;0.1nF,5%,50V,C0G,1608	1	SA
....4	C3024	2203-000236	C-CER,CHIP;0.1nF,5%,50V,C0G,1608	1	SA
....4	C3025	2203-000236	C-CER,CHIP;0.1nF,5%,50V,C0G,1608	1	SA
....4	C5059	2203-000236	C-CER,CHIP;0.1nF,5%,50V,C0G,1608	1	SA
....4	C5068	2203-000236	C-CER,CHIP;0.1nF,5%,50V,C0G,1608	1	SA
....4	C5069	2203-000236	C-CER,CHIP;0.1nF,5%,50V,C0G,1608	1	SA
....4	C5084	2203-000236	C-CER,CHIP;0.1nF,5%,50V,C0G,1608	1	SA
....4	C5085	2203-000236	C-CER,CHIP;0.1nF,5%,50V,C0G,1608	1	SA
....4	C1002	2203-000257	C-CER,CHIP;10nF,10%,50V,X7R,1608	1	SA
....4	C1005	2203-000257	C-CER,CHIP;10nF,10%,50V,X7R,1608	1	SA
....4	C1013	2203-000257	C-CER,CHIP;10nF,10%,50V,X7R,1608	1	SA
....4	C1022	2203-000257	C-CER,CHIP;10nF,10%,50V,X7R,1608	1	SA
....4	C1026	2203-000257	C-CER,CHIP;10nF,10%,50V,X7R,1608	1	SA
....4	C1034	2203-000257	C-CER,CHIP;10nF,10%,50V,X7R,1608	1	SA
....4	C1049	2203-000257	C-CER,CHIP;10nF,10%,50V,X7R,1608	1	SA
....4	C1094	2203-000257	C-CER,CHIP;10nF,10%,50V,X7R,1608	1	SA
....4	C3035	2203-000257	C-CER,CHIP;10nF,10%,50V,X7R,1608	1	SA
....4	C4005	2203-000257	C-CER,CHIP;10nF,10%,50V,X7R,1608	1	SA
....4	C4006	2203-000257	C-CER,CHIP;10nF,10%,50V,X7R,1608	1	SA
....4	C4007	2203-000257	C-CER,CHIP;10nF,10%,50V,X7R,1608	1	SA
....4	C4008	2203-000257	C-CER,CHIP;10nF,10%,50V,X7R,1608	1	SA
....4	C4009	2203-000257	C-CER,CHIP;10nF,10%,50V,X7R,1608	1	SA
....4	C4124	2203-000257	C-CER,CHIP;10nF,10%,50V,X7R,1608	1	SA
....4	C5006	2203-000257	C-CER,CHIP;10nF,10%,50V,X7R,1608	1	SA
....4	C5007	2203-000257	C-CER,CHIP;10nF,10%,50V,X7R,1608	1	SA
....4	C5008	2203-000257	C-CER,CHIP;10nF,10%,50V,X7R,1608	1	SA
....4	C5009	2203-000257	C-CER,CHIP;10nF,10%,50V,X7R,1608	1	SA
....4	C5010	2203-000257	C-CER,CHIP;10nF,10%,50V,X7R,1608	1	SA
....4	C5017	2203-000257	C-CER,CHIP;10nF,10%,50V,X7R,1608	1	SA
....4	C5036	2203-000257	C-CER,CHIP;10nF,10%,50V,X7R,1608	1	SA
....4	C5040	2203-000257	C-CER,CHIP;10nF,10%,50V,X7R,1608	1	SA
....4	C5061	2203-000257	C-CER,CHIP;10nF,10%,50V,X7R,1608	1	SA
....4	C5062	2203-000257	C-CER,CHIP;10nF,10%,50V,X7R,1608	1	SA
....4	C5064	2203-000257	C-CER,CHIP;10nF,10%,50V,X7R,1608	1	SA
....4	C1110	2203-000426	C-CER,CHIP;0.018nF,5%,50V,C0G,1608	1	SA
....4	C1121	2203-000440	C-CER,CHIP;1nF,10%,50V,X7R,1608	1	SA
....4	C3002	2203-000440	C-CER,CHIP;1nF,10%,50V,X7R,1608	1	SA
....4	C3003	2203-000440	C-CER,CHIP;1nF,10%,50V,X7R,1608	1	SA
....4	C3007	2203-000440	C-CER,CHIP;1nF,10%,50V,X7R,1608	1	SA
....4	C3020	2203-000440	C-CER,CHIP;1nF,10%,50V,X7R,1608	1	SA
....4	C3021	2203-000440	C-CER,CHIP;1nF,10%,50V,X7R,1608	1	SA
....4	C3029	2203-000440	C-CER,CHIP;1nF,10%,50V,X7R,1608	1	SA
....4	C4119	2203-000440	C-CER,CHIP;1nF,10%,50V,X7R,1608	1	SA
....4	C5087	2203-000440	C-CER,CHIP;1nF,10%,50V,X7R,1608	1	SA
....4	C4058	2203-000531	C-CER,CHIP;2.7nF,10%,50V,X7R,1608	1	SA
....4	C4066	2203-000531	C-CER,CHIP;2.7nF,10%,50V,X7R,1608	1	SA

ELECTRONIC SERVICE TIRGOVISTE

Level	Loc. No.	Code No.	Description & Specification	Q'ty	SA/SNA
....4	C4001	2203-000552	C-CER,CHIP;0.02nF,5%,50V,C0G,1608	1	SA
....4	C4011	2203-000552	C-CER,CHIP;0.02nF,5%,50V,C0G,1608	1	SA
....4	C1070	2203-000626	C-CER,CHIP;0.022nF,5%,50V,C0G,1608	1	SA
....4	C1082	2203-000626	C-CER,CHIP;0.022nF,5%,50V,C0G,1608	1	SA
....4	C3012	2203-000626	C-CER,CHIP;0.022nF,5%,50V,C0G,1608	1	SA
....4	C3013	2203-000626	C-CER,CHIP;0.022nF,5%,50V,C0G,1608	1	SA
....4	C3030	2203-000626	C-CER,CHIP;0.022nF,5%,50V,C0G,1608	1	SA
....4	C3031	2203-000626	C-CER,CHIP;0.022nF,5%,50V,C0G,1608	1	SA
....4	C1111	2203-000715	C-CER,CHIP;3.3nF,10%,50V,X7R,1608	1	SA
....4	C1142	2203-000783	C-CER,CHIP;0.33nF,5%,50V,C0G,1608	1	SA
....4	C1152	2203-000783	C-CER,CHIP;0.33nF,5%,50V,C0G,1608	1	SA
....4	C2009	2203-000783	C-CER,CHIP;0.33nF,5%,50V,C0G,1608	1	SA
....4	C2010	2203-000783	C-CER,CHIP;0.33nF,5%,50V,C0G,1608	1	SA
....4	C2015	2203-000783	C-CER,CHIP;0.33nF,5%,50V,C0G,1608	1	SA
....4	C2016	2203-000783	C-CER,CHIP;0.33nF,5%,50V,C0G,1608	1	SA
....4	C2026	2203-000783	C-CER,CHIP;0.33nF,5%,50V,C0G,1608	1	SA
....4	C5076	2203-000783	C-CER,CHIP;0.33nF,5%,50V,C0G,1608	1	SA
....4	C5077	2203-000783	C-CER,CHIP;0.33nF,5%,50V,C0G,1608	1	SA
....4	C1100	2203-000798	C-CER,CHIP;33nF,10%,16V,X7R,TP,1608,-	1	SA
....4	C1101	2203-000798	C-CER,CHIP;33nF,10%,16V,X7R,TP,1608,-	1	SA
....4	C2029	2203-000815	C-CER,CHIP;0.033nF,5%,50V,C0G,1608	1	SA
....4	C2030	2203-000815	C-CER,CHIP;0.033nF,5%,50V,C0G,1608	1	SA
....4	C2031	2203-000815	C-CER,CHIP;0.033nF,5%,50V,C0G,1608	1	SA
....4	C5056	2203-000815	C-CER,CHIP;0.033nF,5%,50V,C0G,1608	1	SA
....4	C5057	2203-000815	C-CER,CHIP;0.033nF,5%,50V,C0G,1608	1	SA
....4	C5058	2203-000815	C-CER,CHIP;0.033nF,5%,50V,C0G,1608	1	SA
....4	C1119	2203-000888	C-CER,CHIP;4.7nF,10%,50V,X7R,1608	1	SA
....4	C1120	2203-000888	C-CER,CHIP;4.7nF,10%,50V,X7R,1608	1	SA
....4	C4003	2203-000888	C-CER,CHIP;4.7nF,10%,50V,X7R,1608	1	SA
....4	C4004	2203-000888	C-CER,CHIP;4.7nF,10%,50V,X7R,1608	1	SA
....4	C5003	2203-000888	C-CER,CHIP;4.7nF,10%,50V,X7R,1608	1	SA
....4	C5004	2203-000888	C-CER,CHIP;4.7nF,10%,50V,X7R,1608	1	SA
....4	C1063	2203-000972	C-CER,CHIP;47nF,10%,16V,X7R,1608	1	SA
....4	C2008	2203-000998	C-CER,CHIP;0.047nF,5%,50V,C0G,1608	1	SA
....4	C2021	2203-000998	C-CER,CHIP;0.047nF,5%,50V,C0G,1608	1	SA
....4	C5063	2203-000998	C-CER,CHIP;0.047nF,5%,50V,C0G,1608	1	SA
....4	C1056	2203-001402	C-CER,CHIP;220nF,+80-20%,16V,Y5V,TP,1608	1	SA
....4	C1164	2203-001607	C-CER,CHIP;0.22nF,5%,50V,NP0,1608	1	SA
....4	C1114	2203-001652	C-CER,CHIP;470nF,+80-20%,16V,Y5V,1608	1	SA
....4	C1116	2203-001652	C-CER,CHIP;470nF,+80-20%,16V,Y5V,1608	1	SA
....4	C1038	2203-001656	C-CER,CHIP;0.47nF,5%,50V,NP0,1608	1	SA
....4	C1061	2203-001656	C-CER,CHIP;0.47nF,5%,50V,NP0,1608	1	SA
....4	C3039	2203-001656	C-CER,CHIP;0.47nF,5%,50V,NP0,1608	1	SA
....4	C1117	2203-001724	C-CER,CHIP;4700nF,+80-20%,16V,Y5V,3216	1	SA
....4	C1003	2203-005005	C-CER,CHIP;100nF,10%,16V,X7R,1608	1	SA
....4	C1011	2203-005005	C-CER,CHIP;100nF,10%,16V,X7R,1608	1	SA
....4	C1032	2203-005005	C-CER,CHIP;100nF,10%,16V,X7R,1608	1	SA
....4	C1039	2203-005005	C-CER,CHIP;100nF,10%,16V,X7R,1608	1	SA
....4	C1066	2203-005005	C-CER,CHIP;100nF,10%,16V,X7R,1608	1	SA
....4	C1068	2203-005005	C-CER,CHIP;100nF,10%,16V,X7R,1608	1	SA
....4	C1071	2203-005005	C-CER,CHIP;100nF,10%,16V,X7R,1608	1	SA
....4	C1072	2203-005005	C-CER,CHIP;100nF,10%,16V,X7R,1608	1	SA
....4	C1073	2203-005005	C-CER,CHIP;100nF,10%,16V,X7R,1608	1	SA
....4	C1074	2203-005005	C-CER,CHIP;100nF,10%,16V,X7R,1608	1	SA
....4	C1078	2203-005005	C-CER,CHIP;100nF,10%,16V,X7R,1608	1	SA
....4	C1079	2203-005005	C-CER,CHIP;100nF,10%,16V,X7R,1608	1	SA
....4	C1093	2203-005005	C-CER,CHIP;100nF,10%,16V,X7R,1608	1	SA
....4	C1104	2203-005005	C-CER,CHIP;100nF,10%,16V,X7R,1608	1	SA
....4	C1108	2203-005005	C-CER,CHIP;100nF,10%,16V,X7R,1608	1	SA
....4	C1129	2203-005005	C-CER,CHIP;100nF,10%,16V,X7R,1608	1	SA

ELECTRONIC SERVICE TIRGOVISTE

Level	Loc. No.	Code No.	Description & Specification	Q'ty	SA/SNA
....4	C1130	2203-005005	C-CER,CHIP;100nF,10%,16V,X7R,1608	1	SA
....4	C1148	2203-005005	C-CER,CHIP;100nF,10%,16V,X7R,1608	1	SA
....4	C1169	2203-005005	C-CER,CHIP;100nF,10%,16V,X7R,1608	1	SA
....4	C3009	2203-005005	C-CER,CHIP;100nF,10%,16V,X7R,1608	1	SA
....4	C3010	2203-005005	C-CER,CHIP;100nF,10%,16V,X7R,1608	1	SA
....4	C3014	2203-005005	C-CER,CHIP;100nF,10%,16V,X7R,1608	1	SA
....4	C3015	2203-005005	C-CER,CHIP;100nF,10%,16V,X7R,1608	1	SA
....4	C3016	2203-005005	C-CER,CHIP;100nF,10%,16V,X7R,1608	1	SA
....4	C3018	2203-005005	C-CER,CHIP;100nF,10%,16V,X7R,1608	1	SA
....4	C3019	2203-005005	C-CER,CHIP;100nF,10%,16V,X7R,1608	1	SA
....4	C3022	2203-005005	C-CER,CHIP;100nF,10%,16V,X7R,1608	1	SA
....4	C3026	2203-005005	C-CER,CHIP;100nF,10%,16V,X7R,1608	1	SA
....4	C3027	2203-005005	C-CER,CHIP;100nF,10%,16V,X7R,1608	1	SA
....4	C3032	2203-005005	C-CER,CHIP;100nF,10%,16V,X7R,1608	1	SA
....4	C3037	2203-005005	C-CER,CHIP;100nF,10%,16V,X7R,1608	1	SA
....4	C3040	2203-005005	C-CER,CHIP;100nF,10%,16V,X7R,1608	1	SA
....4	C3042	2203-005005	C-CER,CHIP;100nF,10%,16V,X7R,1608	1	SA
....4	C3044	2203-005005	C-CER,CHIP;100nF,10%,16V,X7R,1608	1	SA
....4	C3046	2203-005005	C-CER,CHIP;100nF,10%,16V,X7R,1608	1	SA
....4	C3047	2203-005005	C-CER,CHIP;100nF,10%,16V,X7R,1608	1	SA
....4	C3049	2203-005005	C-CER,CHIP;100nF,10%,16V,X7R,1608	1	SA
....4	C4002	2203-005005	C-CER,CHIP;100nF,10%,16V,X7R,1608	1	SA
....4	C4125	2203-005005	C-CER,CHIP;100nF,10%,16V,X7R,1608	1	SA
....4	C4126	2203-005005	C-CER,CHIP;100nF,10%,16V,X7R,1608	1	SA
....4	C4129	2203-005005	C-CER,CHIP;100nF,10%,16V,X7R,1608	1	SA
....4	C5001	2203-005005	C-CER,CHIP;100nF,10%,16V,X7R,1608	1	SA
....4	C5002	2203-005005	C-CER,CHIP;100nF,10%,16V,X7R,1608	1	SA
....4	C5011	2203-005005	C-CER,CHIP;100nF,10%,16V,X7R,1608	1	SA
....4	C5012	2203-005005	C-CER,CHIP;100nF,10%,16V,X7R,1608	1	SA
....4	C5021	2203-005005	C-CER,CHIP;100nF,10%,16V,X7R,1608	1	SA
....4	C5023	2203-005005	C-CER,CHIP;100nF,10%,16V,X7R,1608	1	SA
....4	C5039	2203-005005	C-CER,CHIP;100nF,10%,16V,X7R,1608	1	SA
....4	C5054	2203-005005	C-CER,CHIP;100nF,10%,16V,X7R,1608	1	SA
....4	C1143	2203-005030	C-CER,CHIP;470nF,+80-20%,50V,Y5V,TP,3216	1	SA
....4	C1153	2203-005030	C-CER,CHIP;470nF,+80-20%,50V,Y5V,TP,3216	1	SA
....4	C1031	2203-005065	C-CER,CHIP;1000nF,+80-20%,10V,Y5V,1608	1	SA
....4	C1040	2203-005065	C-CER,CHIP;1000nF,+80-20%,10V,Y5V,1608	1	SA
....4	C1155	2203-005065	C-CER,CHIP;1000nF,+80-20%,10V,Y5V,1608	1	SA
....4	C2038	2203-005065	C-CER,CHIP;1000nF,+80-20%,10V,Y5V,1608	1	SA
....4	C3023	2203-005065	C-CER,CHIP;1000nF,+80-20%,10V,Y5V,1608	1	SA
....4	C3033	2203-005065	C-CER,CHIP;1000nF,+80-20%,10V,Y5V,1608	1	SA
....4	C4117	2203-005065	C-CER,CHIP;1000nF,+80-20%,10V,Y5V,1608	1	SA
....4	C4118	2203-005065	C-CER,CHIP;1000nF,+80-20%,10V,Y5V,1608	1	SA
....4	C1122	2203-005249	C-CER,CHIP;100nF,10%,50V,X7R,1608	1	SA
....4	C1131	2203-005249	C-CER,CHIP;100nF,10%,50V,X7R,1608	1	SA
....4	C1137	2203-005249	C-CER,CHIP;100nF,10%,50V,X7R,1608	1	SA
....4	C1138	2203-005249	C-CER,CHIP;100nF,10%,50V,X7R,1608	1	SA
....4	C1140	2203-005249	C-CER,CHIP;100nF,10%,50V,X7R,1608	1	SA
....4	C1144	2203-005249	C-CER,CHIP;100nF,10%,50V,X7R,1608	1	SA
....4	C1145	2203-005249	C-CER,CHIP;100nF,10%,50V,X7R,1608	1	SA
....4	C1146	2203-005249	C-CER,CHIP;100nF,10%,50V,X7R,1608	1	SA
....4	C1147	2203-005249	C-CER,CHIP;100nF,10%,50V,X7R,1608	1	SA
....4	C1149	2203-005249	C-CER,CHIP;100nF,10%,50V,X7R,1608	1	SA
....4	C1150	2203-005249	C-CER,CHIP;100nF,10%,50V,X7R,1608	1	SA
....4	C1154	2203-005249	C-CER,CHIP;100nF,10%,50V,X7R,1608	1	SA
....4	C1156	2203-005249	C-CER,CHIP;100nF,10%,50V,X7R,1608	1	SA
....4	C1157	2203-005249	C-CER,CHIP;100nF,10%,50V,X7R,1608	1	SA
....4	C1160	2203-005249	C-CER,CHIP;100nF,10%,50V,X7R,1608	1	SA
....4	C1166	2203-005249	C-CER,CHIP;100nF,10%,50V,X7R,1608	1	SA
....4	C4014	2203-005533	C-CER,CHIP;1000nF,20%,6.3V,X7R,TP,1608	1	SA

ELECTRONIC SERVICE TIRGOVISTE

Level	Loc. No.	Code No.	Description & Specification	Q'ty	SA/SNA
....4	C4015	2203-005533	C-CER,CHIP;1000nF,20%,6.3V,X7R,TP,1608	1	SA
....4	C4024	2203-005533	C-CER,CHIP;1000nF,20%,6.3V,X7R,TP,1608	1	SA
....4	C4033	2203-005533	C-CER,CHIP;1000nF,20%,6.3V,X7R,TP,1608	1	SA
....4	C4037	2203-005533	C-CER,CHIP;1000nF,20%,6.3V,X7R,TP,1608	1	SA
....4	C4044	2203-005533	C-CER,CHIP;1000nF,20%,6.3V,X7R,TP,1608	1	SA
....4	C4050	2203-005533	C-CER,CHIP;1000nF,20%,6.3V,X7R,TP,1608	1	SA
....4	C4065	2203-005533	C-CER,CHIP;1000nF,20%,6.3V,X7R,TP,1608	1	SA
....4	C4074	2203-005533	C-CER,CHIP;1000nF,20%,6.3V,X7R,TP,1608	1	SA
....4	C4075	2203-005533	C-CER,CHIP;1000nF,20%,6.3V,X7R,TP,1608	1	SA
....4	C4078	2203-005533	C-CER,CHIP;1000nF,20%,6.3V,X7R,TP,1608	1	SA
....4	C4079	2203-005533	C-CER,CHIP;1000nF,20%,6.3V,X7R,TP,1608	1	SA
....4	C4087	2203-005533	C-CER,CHIP;1000nF,20%,6.3V,X7R,TP,1608	1	SA
....4	C4088	2203-005533	C-CER,CHIP;1000nF,20%,6.3V,X7R,TP,1608	1	SA
....4	C4089	2203-005533	C-CER,CHIP;1000nF,20%,6.3V,X7R,TP,1608	1	SA
....4	C4090	2203-005533	C-CER,CHIP;1000nF,20%,6.3V,X7R,TP,1608	1	SA
....4	C4091	2203-005533	C-CER,CHIP;1000nF,20%,6.3V,X7R,TP,1608	1	SA
....4	C4092	2203-005533	C-CER,CHIP;1000nF,20%,6.3V,X7R,TP,1608	1	SA
....4	C4093	2203-005533	C-CER,CHIP;1000nF,20%,6.3V,X7R,TP,1608	1	SA
....4	C4094	2203-005533	C-CER,CHIP;1000nF,20%,6.3V,X7R,TP,1608	1	SA
....4	C1001	2203-006333	C-CER,CHIP;10000nF,20%,16V,X5R,TP,3216	1	SA
....4	C1012	2203-006333	C-CER,CHIP;10000nF,20%,16V,X5R,TP,3216	1	SA
....4	C1014	2203-006333	C-CER,CHIP;10000nF,20%,16V,X5R,TP,3216	1	SA
....4	C1017	2203-006333	C-CER,CHIP;10000nF,20%,16V,X5R,TP,3216	1	SA
....4	C1018	2203-006333	C-CER,CHIP;10000nF,20%,16V,X5R,TP,3216	1	SA
....4	C1019	2203-006333	C-CER,CHIP;10000nF,20%,16V,X5R,TP,3216	1	SA
....4	C1020	2203-006333	C-CER,CHIP;10000nF,20%,16V,X5R,TP,3216	1	SA
....4	C1023	2203-006333	C-CER,CHIP;10000nF,20%,16V,X5R,TP,3216	1	SA
....4	C1024	2203-006333	C-CER,CHIP;10000nF,20%,16V,X5R,TP,3216	1	SA
....4	C1030	2203-006333	C-CER,CHIP;10000nF,20%,16V,X5R,TP,3216	1	SA
....4	C1033	2203-006333	C-CER,CHIP;10000nF,20%,16V,X5R,TP,3216	1	SA
....4	C1035	2203-006333	C-CER,CHIP;10000nF,20%,16V,X5R,TP,3216	1	SA
....4	C1041	2203-006333	C-CER,CHIP;10000nF,20%,16V,X5R,TP,3216	1	SA
....4	C1044	2203-006333	C-CER,CHIP;10000nF,20%,16V,X5R,TP,3216	1	SA
....4	C1045	2203-006333	C-CER,CHIP;10000nF,20%,16V,X5R,TP,3216	1	SA
....4	C1047	2203-006333	C-CER,CHIP;10000nF,20%,16V,X5R,TP,3216	1	SA
....4	C1048	2203-006333	C-CER,CHIP;10000nF,20%,16V,X5R,TP,3216	1	SA
....4	C1051	2203-006333	C-CER,CHIP;10000nF,20%,16V,X5R,TP,3216	1	SA
....4	C1058	2203-006333	C-CER,CHIP;10000nF,20%,16V,X5R,TP,3216	1	SA
....4	C1060	2203-006333	C-CER,CHIP;10000nF,20%,16V,X5R,TP,3216	1	SA
....4	C1065	2203-006333	C-CER,CHIP;10000nF,20%,16V,X5R,TP,3216	1	SA
....4	C1076	2203-006333	C-CER,CHIP;10000nF,20%,16V,X5R,TP,3216	1	SA
....4	C1080	2203-006333	C-CER,CHIP;10000nF,20%,16V,X5R,TP,3216	1	SA
....4	C1081	2203-006333	C-CER,CHIP;10000nF,20%,16V,X5R,TP,3216	1	SA
....4	C1083	2203-006333	C-CER,CHIP;10000nF,20%,16V,X5R,TP,3216	1	SA
....4	C1085	2203-006333	C-CER,CHIP;10000nF,20%,16V,X5R,TP,3216	1	SA
....4	C1088	2203-006333	C-CER,CHIP;10000nF,20%,16V,X5R,TP,3216	1	SA
....4	C1089	2203-006333	C-CER,CHIP;10000nF,20%,16V,X5R,TP,3216	1	SA
....4	C1090	2203-006333	C-CER,CHIP;10000nF,20%,16V,X5R,TP,3216	1	SA
....4	C1091	2203-006333	C-CER,CHIP;10000nF,20%,16V,X5R,TP,3216	1	SA
....4	C1092	2203-006333	C-CER,CHIP;10000nF,20%,16V,X5R,TP,3216	1	SA
....4	C1096	2203-006333	C-CER,CHIP;10000nF,20%,16V,X5R,TP,3216	1	SA
....4	C1099	2203-006333	C-CER,CHIP;10000nF,20%,16V,X5R,TP,3216	1	SA
....4	C1126	2203-006333	C-CER,CHIP;10000nF,20%,16V,X5R,TP,3216	1	SA
....4	C1136	2203-006333	C-CER,CHIP;10000nF,20%,16V,X5R,TP,3216	1	SA
....4	C3017	2203-006333	C-CER,CHIP;10000nF,20%,16V,X5R,TP,3216	1	SA
....4	C4057	2203-006333	C-CER,CHIP;10000nF,20%,16V,X5R,TP,3216	1	SA
....4	C4064	2203-006333	C-CER,CHIP;10000nF,20%,16V,X5R,TP,3216	1	SA
....4	C4072	2203-006333	C-CER,CHIP;10000nF,20%,16V,X5R,TP,3216	1	SA
....4	C4082	2203-006333	C-CER,CHIP;10000nF,20%,16V,X5R,TP,3216	1	SA
....4	C4122	2203-006333	C-CER,CHIP;10000nF,20%,16V,X5R,TP,3216	1	SA

ELECTRONIC SERVICE TIPGOVISTE

Level	Loc. No.	Code No.	Description & Specification	Q'ty	SA/SNA
....4	C5083	2203-006333	C-CER,CHIP;10000nF,20%,16V,X5R,TP,3216	1	SA
....4	C5086	2203-006333	C-CER,CHIP;10000nF,20%,16V,X5R,TP,3216	1	SA
....4	C2001	2402-000108	C-AL,SMD;10uF,20%,16V,WT,TP,4.3x4.3x5.2m	1	SA
....4	C5037	2402-000108	C-AL,SMD;10uF,20%,16V,WT,TP,4.3x4.3x5.2m	1	SA
....4	C5041	2402-000108	C-AL,SMD;10uF,20%,16V,WT,TP,4.3x4.3x5.2m	1	SA
....4	C1102	2402-001081	C-AL,SMD;100uF,20%,25V,WT,TP,8.3x8.3x10	1	SA
....4	C1125	2402-001083	C-AL,SMD;100uF,20%,50V,GP,TP,10x10.3x10m	1	SA
....4	C5032	2402-001097	C-AL,SMD;0.1UF,20%,50V,WT,TP,4.3X4.3X5.2	1	SA
....4	C5033	2402-001097	C-AL,SMD;0.1UF,20%,50V,WT,TP,4.3X4.3X5.2	1	SA
....4	C1009	2402-001128	C-AL,SMD;100UF,20%,16V,WT,TP,6.3X5.7MM	1	SA
....4	C1010	2402-001128	C-AL,SMD;100UF,20%,16V,WT,TP,6.3X5.7MM	1	SA
....4	C1015	2402-001128	C-AL,SMD;100UF,20%,16V,WT,TP,6.3X5.7MM	1	SA
....4	C1029	2402-001128	C-AL,SMD;100UF,20%,16V,WT,TP,6.3X5.7MM	1	SA
....4	C1036	2402-001128	C-AL,SMD;100UF,20%,16V,WT,TP,6.3X5.7MM	1	SA
....4	C1042	2402-001128	C-AL,SMD;100UF,20%,16V,WT,TP,6.3X5.7MM	1	SA
....4	C1059	2402-001128	C-AL,SMD;100UF,20%,16V,WT,TP,6.3X5.7MM	1	SA
....4	C1112	2402-001128	C-AL,SMD;100UF,20%,16V,WT,TP,6.3X5.7MM	1	SA
....4	C1113	2402-001128	C-AL,SMD;100UF,20%,16V,WT,TP,6.3X5.7MM	1	SA
....4	C1115	2402-001128	C-AL,SMD;100UF,20%,16V,WT,TP,6.3X5.7MM	1	SA
....4	C1123	2402-001128	C-AL,SMD;100UF,20%,16V,WT,TP,6.3X5.7MM	1	SA
....4	C1007	2402-001129	C-AL,SMD;47UF,20%,16V,WT,TP,6.3X5.2MM	1	SA
....4	C1028	2402-001129	C-AL,SMD;47UF,20%,16V,WT,TP,6.3X5.2MM	1	SA
....4	C1064	2402-001129	C-AL,SMD;47UF,20%,16V,WT,TP,6.3X5.2MM	1	SA
....4	C1069	2402-001129	C-AL,SMD;47UF,20%,16V,WT,TP,6.3X5.2MM	1	SA
....4	C1107	2402-001129	C-AL,SMD;47UF,20%,16V,WT,TP,6.3X5.2MM	1	SA
....4	C3036	2402-001129	C-AL,SMD;47UF,20%,16V,WT,TP,6.3X5.2MM	1	SA
....4	C3038	2402-001129	C-AL,SMD;47UF,20%,16V,WT,TP,6.3X5.2MM	1	SA
....4	C4010	2402-001129	C-AL,SMD;47UF,20%,16V,WT,TP,6.3X5.2MM	1	SA
....4	C5042	2402-001129	C-AL,SMD;47UF,20%,16V,WT,TP,6.3X5.2MM	1	SA
....4	C1106	2402-001160	C-AL,SMD;330UF,20%,16V,WT,TP,1008	1	SA
....4	C1077	2402-001178	C-AL,SMD;10uF,20%,16V,WT,TP,4.3x4.3x5.8m	1	SA
....4	C1139	2402-001178	C-AL,SMD;10uF,20%,16V,WT,TP,4.3x4.3x5.8m	1	SA
....4	C2017	2402-001178	C-AL,SMD;10uF,20%,16V,WT,TP,4.3x4.3x5.8m	1	SA
....4	C3004	2402-001178	C-AL,SMD;10uF,20%,16V,WT,TP,4.3x4.3x5.8m	1	SA
....4	C3006	2402-001178	C-AL,SMD;10uF,20%,16V,WT,TP,4.3x4.3x5.8m	1	SA
....4	C3008	2402-001178	C-AL,SMD;10uF,20%,16V,WT,TP,4.3x4.3x5.8m	1	SA
....4	C3011	2402-001178	C-AL,SMD;10uF,20%,16V,WT,TP,4.3x4.3x5.8m	1	SA
....4	C3028	2402-001178	C-AL,SMD;10uF,20%,16V,WT,TP,4.3x4.3x5.8m	1	SA
....4	C3041	2402-001178	C-AL,SMD;10uF,20%,16V,WT,TP,4.3x4.3x5.8m	1	SA
....4	C3043	2402-001178	C-AL,SMD;10uF,20%,16V,WT,TP,4.3x4.3x5.8m	1	SA
....4	C3045	2402-001178	C-AL,SMD;10uF,20%,16V,WT,TP,4.3x4.3x5.8m	1	SA
....4	C3048	2402-001178	C-AL,SMD;10uF,20%,16V,WT,TP,4.3x4.3x5.8m	1	SA
....4	C3050	2402-001178	C-AL,SMD;10uF,20%,16V,WT,TP,4.3x4.3x5.8m	1	SA
....4	C3051	2402-001178	C-AL,SMD;10uF,20%,16V,WT,TP,4.3x4.3x5.8m	1	SA
....4	C1057	2402-001183	C-AL,SMD;22UF,20%,16V,WT,TP,5.3X5.3X6MM	1	SA
....4	C1128	2402-001183	C-AL,SMD;22UF,20%,16V,WT,TP,5.3X5.3X6MM	1	SA
....4	C1167	2402-001183	C-AL,SMD;22UF,20%,16V,WT,TP,5.3X5.3X6MM	1	SA
....4	C4123	2402-001183	C-AL,SMD;22UF,20%,16V,WT,TP,5.3X5.3X6MM	1	SA
....4	C5005	2402-001183	C-AL,SMD;22UF,20%,16V,WT,TP,5.3X5.3X6MM	1	SA
....4	C5016	2402-001183	C-AL,SMD;22UF,20%,16V,WT,TP,5.3X5.3X6MM	1	SA
....4	C1127	2402-001221	C-AL,SMD;470UF,20%,16V,-,TP,A8.3XB8.3XL1	1	SA
....4	C1165	2402-001221	C-AL,SMD;470UF,20%,16V,-,TP,A8.3XB8.3XL1	1	SA
....4	C4030	2402-001226	C-AL,SMD;4.7UF,20%,35V,HR,TP,4.3X4.3X5.8	1	SA
....4	C4047	2402-001226	C-AL,SMD;4.7UF,20%,35V,HR,TP,4.3X4.3X5.8	1	SA
....4	C4051	2402-001226	C-AL,SMD;4.7UF,20%,35V,HR,TP,4.3X4.3X5.8	1	SA
....4	C4127	2402-001226	C-AL,SMD;4.7UF,20%,35V,HR,TP,4.3X4.3X5.8	1	SA
....4	C5078	2402-001257	C-AL,SMD;470uF,20%,16V,-,TP,8.3*10	1	SA
....4	C5079	2402-001257	C-AL,SMD;470uF,20%,16V,-,TP,8.3*10	1	SA
....4	C5080	2402-001257	C-AL,SMD;470uF,20%,16V,-,TP,8.3*10	1	SA
....4	C1095	2409-001029	C-ORGANIC;120uF,20%,6.3V,WT,TP,10.3x10.3	1	SA

ELECTRONIC SERVICE TIRGOVISTE

Level	Loc. No.	Code No.	Description & Specification	Q'ty	SA/SNA
....4	T0052	2703-000274	INDUCTOR-SMD;2.2uH,10%,2012	1	SA
....4	T0052	2703-000398	INDUCTOR-SMD;10uH,10%,3225	1	SA
....4	T0052	2703-000398	INDUCTOR-SMD;10uH,10%,3225	1	SA
....4	T0052	2703-000398	INDUCTOR-SMD;10uH,10%,3225	1	SA
....4	T0052	2703-000398	INDUCTOR-SMD;10uH,10%,3225	1	SA
....4	T0052	2703-000398	INDUCTOR-SMD;10uH,10%,3225	1	SA
....4	T0052	2703-000398	INDUCTOR-SMD;10uH,10%,3225	1	SA
....4	T0052	2703-000398	INDUCTOR-SMD;10uH,10%,3225	1	SA
....4	T0052	2703-000398	INDUCTOR-SMD;10uH,10%,3225	1	SA
....4	T0052	2703-000398	INDUCTOR-SMD;10uH,10%,3225	1	SA
....4	T0052	2703-000398	INDUCTOR-SMD;10uH,10%,3225	1	SA
....4	T0052	2703-000398	INDUCTOR-SMD;10uH,10%,3225	1	SA
....4	T0052	2703-000398	INDUCTOR-SMD;10uH,10%,3225	1	SA
....4	T0052	2703-000398	INDUCTOR-SMD;10uH,10%,3225	1	SA
....4	T0052	2703-000398	INDUCTOR-SMD;10uH,10%,3225	1	SA
....4	T0052	2703-000398	INDUCTOR-SMD;10uH,10%,3225	1	SA
....4	T0052	2703-000398	INDUCTOR-SMD;10uH,10%,3225	1	SA
....4	T0052	2703-001229	INDUCTOR-SMD;2.2uH,10%,1608	1	SA
....4	T0052	2703-001229	INDUCTOR-SMD;2.2uH,10%,1608	1	SA
....4	T0052	2703-001229	INDUCTOR-SMD;2.2uH,10%,1608	1	SA
....4	T0052	2703-001229	INDUCTOR-SMD;2.2uH,10%,1608	1	SA
....4	T0052	2703-001229	INDUCTOR-SMD;2.2uH,10%,1608	1	SA
....4	T0052	2703-001229	INDUCTOR-SMD;2.2uH,10%,1608	1	SA
....4	T0052	2703-001778	INDUCTOR-SMD;3.3uH,20%,3225	1	SA
....4	T0052	2703-002722	INDUCTOR-SMD;22uH,20%,12x12mm	1	SA
....4	X3002	2801-003326	CRYSTAL-SMD;24MHZ,30PPM,28-ABX,20PF,50OH	1	SA
....4	X3001	2801-003923	CRYSTAL-SMD;10MHz,30ppm,28-AAN,20pF,60oh	1	SA
....4	X1001	2801-003954	CRYSTAL-SMD;27MHz,30ppm,28-AAN,16pF,50oh	1	SA
....4	X4001	2801-004483	CRYSTAL-SMD;28.322MHz,30ppm,HC-49,20pF,5	1	SA
....4	F103	2901-001114	FILTER-EMI SMD;25VDC,2.0ADC,-,100nF,3.2x	1	SA
....4	T0568	3301-000314	BEAD-SMD;120ohm,1.6x0.8x0.8mm,-,-,-	1	SNA
....4	T0568	3301-000314	BEAD-SMD;120ohm,1.6x0.8x0.8mm,-,-,-	1	SNA
....4	T0568	3301-001145	BEAD-SMD;60ohm,4516,TP,70ohm/45MHz,82ohm	1	SNA
....4	T0568	3301-001145	BEAD-SMD;60ohm,4516,TP,70ohm/45MHz,82ohm	1	SNA
....4	T0568	3301-001145	BEAD-SMD;60ohm,4516,TP,70ohm/45MHz,82ohm	1	SNA
....4	T0568	3301-001145	BEAD-SMD;60ohm,4516,TP,70ohm/45MHz,82ohm	1	SNA
....4	T0568	3301-001236	BEAD-SMD;60ohm,1608,-,-,-	1	SNA
....4	T0568	3301-001236	BEAD-SMD;60ohm,1608,-,-,-	1	SNA
....4	T0568	3301-001236	BEAD-SMD;60ohm,1608,-,-,-	1	SNA
....4	T0568	3301-001236	BEAD-SMD;60ohm,1608,-,-,-	1	SNA
....4	T0568	3301-001236	BEAD-SMD;60ohm,1608,-,-,-	1	SNA
....4	T0568	3301-001236	BEAD-SMD;60ohm,1608,-,-,-	1	SNA
....4	T0568	3301-001324	BEAD-SMD;15ohm,2012,600mA,TP,,,0.1ohm	1	SNA
....4	T0568	3301-001324	BEAD-SMD;15ohm,2012,600mA,TP,,,0.1ohm	1	SNA
....4	T0568	3301-001324	BEAD-SMD;15ohm,2012,600mA,TP,,,0.1ohm	1	SNA
....4	T0568	3301-001324	BEAD-SMD;15ohm,2012,600mA,TP,,,0.1ohm	1	SNA
....4	T0568	3301-001324	BEAD-SMD;15ohm,2012,600mA,TP,,,0.1ohm	1	SNA
....4	T0568	3301-001324	BEAD-SMD;15ohm,2012,600mA,TP,,,0.1ohm	1	SNA
....4	T0568	3301-001324	BEAD-SMD;15ohm,2012,600mA,TP,,,0.1ohm	1	SNA
....4	T0568	3301-001324	BEAD-SMD;15ohm,2012,600mA,TP,,,0.1ohm	1	SNA
....4	T0568	3301-001324	BEAD-SMD;15ohm,2012,600mA,TP,,,0.1ohm	1	SNA
....4	T0568	3301-001324	BEAD-SMD;15ohm,2012,600mA,TP,,,0.1ohm	1	SNA
....4	T0568	3301-001324	BEAD-SMD;15ohm,2012,600mA,TP,,,0.1ohm	1	SNA
....4	T0568	3301-001404	BEAD-SMD;30ohm,2012,TP,-,-	1	SA
....4	T0568	3301-001404	BEAD-SMD;30ohm,2012,TP,-,-	1	SA
....4	T0568	3301-001404	BEAD-SMD;30ohm,2012,TP,-,-	1	SA
....4	T0568	3301-001404	BEAD-SMD;30ohm,2012,TP,-,-	1	SA
....4	T0568	3301-001404	BEAD-SMD;30ohm,2012,TP,-,-	1	SA

ELECTRONIC SERVICE TIRGOVISTE

Level	Loc. No.	Code No.	Description & Specification	Q'ty	SA/SNA
....4	T0568	3301-001404	BEAD-SMD;30ohm,2012,TP,-,-	1	SA
....4	T0568	3301-001569	BEAD-SMD;600ohm,2012,1000mA,TP,520ohm/90	1	SNA
....4	T0568	3301-001569	BEAD-SMD;600ohm,2012,1000mA,TP,520ohm/90	1	SNA
....4	T0568	3301-001569	BEAD-SMD;600ohm,2012,1000mA,TP,520ohm/90	1	SNA
....4	CN2001	3701-001311	CONNECTOR-HDMI;21P,2R,FEMALE,SMD-S,AU30U	1	SA
....4	CN1003	3711-005291	HEADER-BOARD TO CABLE;BOX,2P,1R,2MM,SMD-	1	SA
....4	CN1002	3711-005292	HEADER-BOARD TO CABLE;BOX,3P,1R,2MM,SMD-	1	SA
....4	CN5001	3711-005497	HEADER-BOARD TO CABLE;BOX,15P,1R,1.25MM,	1	SA
....4	M0018	BN97-00805F	ASSY MICOM;T-XXXX-XXXX,LE32R73BDX/XEU49B	1	SA
.....5	IC115	1107-001555	IC-FLASH MEMORY;49BV802A,8MBIT,1MX8/512K	1	SNA
....4	M0018	BN97-00805G	ASSY MICOM;T-XXXX-XXXX,LE32R73BDX/XEU24C	1	SA
.....5	IC520	0903-001389	IC-MICROCONTROLLER;S3F866B,8Bit,QFP,44P,	1	SNA
....4	R1057	2007-007299	R-CHIP;6.81Kohm,1%,1/10W,TP,1608	1	SA
....4	R2024	2007-000040	R-CHIP;150ohm,1%,1/10W,TP,1608	1	SA
....4	R2119	2007-000287	R-CHIP;100OHM,1%,1/10W,TP,1608	1	SA
....4	R2030	2007-001131	R-CHIP;68ohm,1%,1/10W,TP,1608	1	SA
....4	R2056	2007-001131	R-CHIP;68ohm,1%,1/10W,TP,1608	1	SA
....4	R2118	2007-007733	R-CHIP;51ohm,1%,1/10W,TP,1608	1	SA
....4	T0052	2703-002915	INDUCTOR-SMD;22uH,20%,8080	1	SA
....4	T0052	2703-002915	INDUCTOR-SMD;22uH,20%,8080	1	SA
....4	T0052	2703-002915	INDUCTOR-SMD;22uH,20%,8080	1	SA
....4	T0052	2703-002915	INDUCTOR-SMD;22uH,20%,8080	1	SA
....4	R4121	2007-000075	R-CHIP;220ohm,5%,1/10W,TP,1608	1	SA
....4	R4122	2007-000903	R-CHIP;430ohm,1%,1/10W,TP,1608	1	SA
....4	C5024	2402-000179	C-AL,SMD;47uF,20%,16V,GP,TP,6.6x6.6x5.7m	1	SA
....4	C4012	2402-001059	C-AL,SMD;220UF,20%,6.3V,-,TP,6X6.6X6.6	1	SA
....4	C4013	2402-001059	C-AL,SMD;220UF,20%,6.3V,-,TP,6X6.6X6.6	1	SA
....4	T0568	3301-001393	BEAD-SMD;60ohm,3216,1500mA,TP,41ohm/40MH	1	SNA
....4	T0077	BN41-00700A	PCB MAIN;CAMBRIDGE,FR-4,4,MP1.0,1.6T,192	1	SNA
...3	T0562	6046-001013	STAND OFF;M3,L5,Ni PLT,SUM24L,#4-40	2	SNA
..2	T0422	BN94-00887A	ASSY PCB MISC-DTV MODULE;DTV MODULE,XEF	1	SNA
...3	T0245	0202-001522	SOLDER-WIRE FLUX;LFA3-107,-,D1.2,96.5Sn/	0.003	SNA
...3	CN902	3703-001124	CONNECTOR-BACK PANEL;32P,2R,MALE,ANGLE,A	1	SA
...3	CN902	3703-001124	CONNECTOR-BACK PANEL;32P,2R,MALE,ANGLE,A	1	SA
...3	DJ301	3709-001346	CONNECTOR-CARD SLOT;68P,0.27mm,ANGLE,AU1	1	SA
...3	DJ402	3722-001055	JACK-PHONE;5P/2C,AG,BLK,ANGLE	1	SA
...3	T0510	BN97-00843A	ASSY SMD-MAIN;DTV MODULE,XEF	1	SNA
....4	CIS05	0202-001477	SOLDER-CREAM;LST309-M,-,D20~45§-,96.5Sn/	0.465	SNA
....4	DQ701	0501-000434	TR-SMALL SIGNAL;KTC3875S-GR,NPN,150mW,SO	1	SA
....4	DQ401	0501-000669	TR-SMALL SIGNAL;KTA1505Y,PNP,150mW,SOT-2	1	SA
....4	DQ402	0501-000669	TR-SMALL SIGNAL;KTA1505Y,PNP,150mW,SOT-2	1	SA
....4	DQ703	0501-000669	TR-SMALL SIGNAL;KTA1505Y,PNP,150mW,SOT-2	1	SA
....4	DQ704	0501-000669	TR-SMALL SIGNAL;KTA1505Y,PNP,150mW,SOT-2	1	SA
....4	IC104	0801-002095	IC-CMOS LOGIC;74LCX245,TRANSCEIVER,TSSOP	1	SA
....4	IC104	0801-002237	IC-CMOS LOGIC;74V(A)HC1G04,INVERTER,SC70	1	SA
....4	IC104	0801-002394	IC-CMOS LOGIC;74LCX32,OR GATE,SOIC,14P,1	1	SA
....4	IC104	0801-002407	IC-CMOS LOGIC;74LCX08,AND GATE,SOIC,14P,	1	SA
....4	IC104	0801-002683	IC-CMOS LOGIC;74HCT245,TRANSCEIVER,TSSOP	1	SA
....4	IC104	0801-002709	IC-CMOS LOGIC;74HC373,D FLIP-FLOP,TSSOP,	1	SA
....4	IC104	0801-002709	IC-CMOS LOGIC;74HC373,D FLIP-FLOP,TSSOP,	1	SA
....4	IC107	1002-001227	IC-D/A CONVERTER;CS4340-KSR,24BIT,SOP,16	1	SA
....4	DU402	1006-001165	IC-LINE TRANSCEIVER;MAX3243CDBR,SSOP,28P	1	SA
....4	IC113	1105-001305	IC-DRAM;4S641632,-,64MBIT,1MX16X4BIT,TSO	1	SA
....4	IC113	1105-001308	IC-DRAM;K4S281632,128Mbit,8Mx16,TSOP,54P	1	SA
....4	DU701	1203-001824	IC-VOL. DETECTOR;7042,SOT-89,3P,-,PLASTI	1	SA
....4	T0087	1203-002842	IC-POSI.FIXED REG.;AP1117D-33A,TO-252,3P	1	SA
....4	DU101	1204-002400	IC-DECODER;STI5517SUA,PBGA,416P,27x27mm,	1	SA
....4	DR155	2007-000052	R-CHIP;10Kohm,1%,1/10W,TP,1608	1	SA
....4	DR156	2007-000052	R-CHIP;10Kohm,1%,1/10W,TP,1608	1	SA
....4	DR140	2007-000070	R-CHIP;0ohm,5%,1/10W,TP,1608	1	SA

ELECTRONIC SERVICE TIBGOVISTE

Level	Loc. No.	Code No.	Description & Specification	Q'ty	SA/SNA
....4	DR154	2007-000070	R-CHIP;0ohm,5%,1/10W,TP,1608	1	SA
....4	DR158	2007-000070	R-CHIP;0ohm,5%,1/10W,TP,1608	1	SA
....4	DR159	2007-000070	R-CHIP;0ohm,5%,1/10W,TP,1608	1	SA
....4	DR811	2007-000070	R-CHIP;0ohm,5%,1/10W,TP,1608	1	SA
....4	DR812	2007-000070	R-CHIP;0ohm,5%,1/10W,TP,1608	1	SA
....4	DR907	2007-000070	R-CHIP;0ohm,5%,1/10W,TP,1608	1	SA
....4	OR112	2007-000070	R-CHIP;0ohm,5%,1/10W,TP,1608	1	SA
....4	OR113	2007-000070	R-CHIP;0ohm,5%,1/10W,TP,1608	1	SA
....4	DR1102	2007-000072	R-CHIP;47ohm,5%,1/10W,TP,1608	1	SA
....4	DR111	2007-000072	R-CHIP;47ohm,5%,1/10W,TP,1608	1	SA
....4	DR116	2007-000072	R-CHIP;47ohm,5%,1/10W,TP,1608	1	SA
....4	DR169	2007-000072	R-CHIP;47ohm,5%,1/10W,TP,1608	1	SA
....4	DR170	2007-000072	R-CHIP;47ohm,5%,1/10W,TP,1608	1	SA
....4	DR174	2007-000072	R-CHIP;47ohm,5%,1/10W,TP,1608	1	SA
....4	DR176	2007-000072	R-CHIP;47ohm,5%,1/10W,TP,1608	1	SA
....4	DR182	2007-000072	R-CHIP;47ohm,5%,1/10W,TP,1608	1	SA
....4	DR183	2007-000072	R-CHIP;47ohm,5%,1/10W,TP,1608	1	SA
....4	DR184	2007-000072	R-CHIP;47ohm,5%,1/10W,TP,1608	1	SA
....4	DR185	2007-000072	R-CHIP;47ohm,5%,1/10W,TP,1608	1	SA
....4	DR186	2007-000072	R-CHIP;47ohm,5%,1/10W,TP,1608	1	SA
....4	DR187	2007-000072	R-CHIP;47ohm,5%,1/10W,TP,1608	1	SA
....4	DR195	2007-000072	R-CHIP;47ohm,5%,1/10W,TP,1608	1	SA
....4	DR196	2007-000072	R-CHIP;47ohm,5%,1/10W,TP,1608	1	SA
....4	DR197	2007-000072	R-CHIP;47ohm,5%,1/10W,TP,1608	1	SA
....4	DR198	2007-000072	R-CHIP;47ohm,5%,1/10W,TP,1608	1	SA
....4	DR199	2007-000072	R-CHIP;47ohm,5%,1/10W,TP,1608	1	SA
....4	DR202	2007-000072	R-CHIP;47ohm,5%,1/10W,TP,1608	1	SA
....4	DR203	2007-000072	R-CHIP;47ohm,5%,1/10W,TP,1608	1	SA
....4	DR204	2007-000072	R-CHIP;47ohm,5%,1/10W,TP,1608	1	SA
....4	DR501	2007-000072	R-CHIP;47ohm,5%,1/10W,TP,1608	1	SA
....4	DR902	2007-000072	R-CHIP;47ohm,5%,1/10W,TP,1608	1	SA
....4	DR905	2007-000072	R-CHIP;47ohm,5%,1/10W,TP,1608	1	SA
....4	DR906	2007-000072	R-CHIP;47ohm,5%,1/10W,TP,1608	1	SA
....4	DR916	2007-000072	R-CHIP;47ohm,5%,1/10W,TP,1608	1	SA
....4	DR917	2007-000072	R-CHIP;47ohm,5%,1/10W,TP,1608	1	SA
....4	DR923	2007-000072	R-CHIP;47ohm,5%,1/10W,TP,1608	1	SA
....4	DR104	2007-000074	R-CHIP;100ohm,5%,1/10W,TP,1608	1	SA
....4	DR105	2007-000074	R-CHIP;100ohm,5%,1/10W,TP,1608	1	SA
....4	DR1101	2007-000074	R-CHIP;100ohm,5%,1/10W,TP,1608	1	SA
....4	DR112	2007-000074	R-CHIP;100ohm,5%,1/10W,TP,1608	1	SA
....4	DR113	2007-000074	R-CHIP;100ohm,5%,1/10W,TP,1608	1	SA
....4	DR118	2007-000074	R-CHIP;100ohm,5%,1/10W,TP,1608	1	SA
....4	DR119	2007-000074	R-CHIP;100ohm,5%,1/10W,TP,1608	1	SA
....4	DR120	2007-000074	R-CHIP;100ohm,5%,1/10W,TP,1608	1	SA
....4	DR121	2007-000074	R-CHIP;100ohm,5%,1/10W,TP,1608	1	SA
....4	DR122	2007-000074	R-CHIP;100ohm,5%,1/10W,TP,1608	1	SA
....4	DR123	2007-000074	R-CHIP;100ohm,5%,1/10W,TP,1608	1	SA
....4	DR124	2007-000074	R-CHIP;100ohm,5%,1/10W,TP,1608	1	SA
....4	DR125	2007-000074	R-CHIP;100ohm,5%,1/10W,TP,1608	1	SA
....4	DR126	2007-000074	R-CHIP;100ohm,5%,1/10W,TP,1608	1	SA
....4	DR127	2007-000074	R-CHIP;100ohm,5%,1/10W,TP,1608	1	SA
....4	DR128	2007-000074	R-CHIP;100ohm,5%,1/10W,TP,1608	1	SA
....4	DR129	2007-000074	R-CHIP;100ohm,5%,1/10W,TP,1608	1	SA
....4	DR130	2007-000074	R-CHIP;100ohm,5%,1/10W,TP,1608	1	SA
....4	DR131	2007-000074	R-CHIP;100ohm,5%,1/10W,TP,1608	1	SA
....4	DR137	2007-000074	R-CHIP;100ohm,5%,1/10W,TP,1608	1	SA
....4	DR138	2007-000074	R-CHIP;100ohm,5%,1/10W,TP,1608	1	SA
....4	DR145	2007-000074	R-CHIP;100ohm,5%,1/10W,TP,1608	1	SA
....4	DR146	2007-000074	R-CHIP;100ohm,5%,1/10W,TP,1608	1	SA
....4	DR147	2007-000074	R-CHIP;100ohm,5%,1/10W,TP,1608	1	SA

ELECTRONIC SERVICE TIRGOVISTE

Level	Loc. No.	Code No.	Description & Specification	Q'ty	SA/SNA
....4	DR148	2007-000074	R-CHIP;100ohm,5%,1/10W,TP,1608	1	SA
....4	DR149	2007-000074	R-CHIP;100ohm,5%,1/10W,TP,1608	1	SA
....4	DR150	2007-000074	R-CHIP;100ohm,5%,1/10W,TP,1608	1	SA
....4	DR151	2007-000074	R-CHIP;100ohm,5%,1/10W,TP,1608	1	SA
....4	DR152	2007-000074	R-CHIP;100ohm,5%,1/10W,TP,1608	1	SA
....4	DR160	2007-000074	R-CHIP;100ohm,5%,1/10W,TP,1608	1	SA
....4	DR161	2007-000074	R-CHIP;100ohm,5%,1/10W,TP,1608	1	SA
....4	DR166	2007-000074	R-CHIP;100ohm,5%,1/10W,TP,1608	1	SA
....4	DR171	2007-000074	R-CHIP;100ohm,5%,1/10W,TP,1608	1	SA
....4	DR172	2007-000074	R-CHIP;100ohm,5%,1/10W,TP,1608	1	SA
....4	DR175	2007-000074	R-CHIP;100ohm,5%,1/10W,TP,1608	1	SA
....4	DR180	2007-000074	R-CHIP;100ohm,5%,1/10W,TP,1608	1	SA
....4	DR181	2007-000074	R-CHIP;100ohm,5%,1/10W,TP,1608	1	SA
....4	DR200	2007-000074	R-CHIP;100ohm,5%,1/10W,TP,1608	1	SA
....4	DR201	2007-000074	R-CHIP;100ohm,5%,1/10W,TP,1608	1	SA
....4	DR221	2007-000074	R-CHIP;100ohm,5%,1/10W,TP,1608	1	SA
....4	DR400	2007-000074	R-CHIP;100ohm,5%,1/10W,TP,1608	1	SA
....4	DR401	2007-000074	R-CHIP;100ohm,5%,1/10W,TP,1608	1	SA
....4	DR402	2007-000074	R-CHIP;100ohm,5%,1/10W,TP,1608	1	SA
....4	DR403	2007-000074	R-CHIP;100ohm,5%,1/10W,TP,1608	1	SA
....4	DR404	2007-000074	R-CHIP;100ohm,5%,1/10W,TP,1608	1	SA
....4	DR405	2007-000074	R-CHIP;100ohm,5%,1/10W,TP,1608	1	SA
....4	DR406	2007-000074	R-CHIP;100ohm,5%,1/10W,TP,1608	1	SA
....4	DR407	2007-000074	R-CHIP;100ohm,5%,1/10W,TP,1608	1	SA
....4	DR419	2007-000074	R-CHIP;100ohm,5%,1/10W,TP,1608	1	SA
....4	DR704	2007-000074	R-CHIP;100ohm,5%,1/10W,TP,1608	1	SA
....4	DR162	2007-000076	R-CHIP;330ohm,5%,1/10W,TP,1608	1	SA
....4	DR163	2007-000076	R-CHIP;330ohm,5%,1/10W,TP,1608	1	SA
....4	DR164	2007-000076	R-CHIP;330ohm,5%,1/10W,TP,1608	1	SA
....4	DR165	2007-000076	R-CHIP;330ohm,5%,1/10W,TP,1608	1	SA
....4	DR502	2007-000078	R-CHIP;1Kohm,5%,1/10W,TP,1608	1	SA
....4	DR503	2007-000078	R-CHIP;1Kohm,5%,1/10W,TP,1608	1	SA
....4	DR505	2007-000078	R-CHIP;1Kohm,5%,1/10W,TP,1608	1	SA
....4	DR702	2007-000078	R-CHIP;1Kohm,5%,1/10W,TP,1608	1	SA
....4	DR114	2007-000084	R-CHIP;4.7Kohm,5%,1/10W,TP,1608	1	SA
....4	DR139	2007-000084	R-CHIP;4.7Kohm,5%,1/10W,TP,1608	1	SA
....4	DR141	2007-000084	R-CHIP;4.7Kohm,5%,1/10W,TP,1608	1	SA
....4	DR142	2007-000084	R-CHIP;4.7Kohm,5%,1/10W,TP,1608	1	SA
....4	DR143	2007-000084	R-CHIP;4.7Kohm,5%,1/10W,TP,1608	1	SA
....4	DR144	2007-000084	R-CHIP;4.7Kohm,5%,1/10W,TP,1608	1	SA
....4	DR153	2007-000084	R-CHIP;4.7Kohm,5%,1/10W,TP,1608	1	SA
....4	DR417	2007-000084	R-CHIP;4.7Kohm,5%,1/10W,TP,1608	1	SA
....4	DR418	2007-000084	R-CHIP;4.7Kohm,5%,1/10W,TP,1608	1	SA
....4	DR701	2007-000084	R-CHIP;4.7Kohm,5%,1/10W,TP,1608	1	SA
....4	DR703	2007-000084	R-CHIP;4.7Kohm,5%,1/10W,TP,1608	1	SA
....4	DR705	2007-000084	R-CHIP;4.7Kohm,5%,1/10W,TP,1608	1	SA
....4	DR707	2007-000084	R-CHIP;4.7Kohm,5%,1/10W,TP,1608	1	SA
....4	DR117	2007-000090	R-CHIP;10Kohm,5%,1/10W,TP,1608	1	SA
....4	DR177	2007-000090	R-CHIP;10Kohm,5%,1/10W,TP,1608	1	SA
....4	DR178	2007-000090	R-CHIP;10Kohm,5%,1/10W,TP,1608	1	SA
....4	DR179	2007-000090	R-CHIP;10Kohm,5%,1/10W,TP,1608	1	SA
....4	DR188	2007-000090	R-CHIP;10Kohm,5%,1/10W,TP,1608	1	SA
....4	DR189	2007-000090	R-CHIP;10Kohm,5%,1/10W,TP,1608	1	SA
....4	DR190	2007-000090	R-CHIP;10Kohm,5%,1/10W,TP,1608	1	SA
....4	DR191	2007-000090	R-CHIP;10Kohm,5%,1/10W,TP,1608	1	SA
....4	DR192	2007-000090	R-CHIP;10Kohm,5%,1/10W,TP,1608	1	SA
....4	DR193	2007-000090	R-CHIP;10Kohm,5%,1/10W,TP,1608	1	SA
....4	DR194	2007-000090	R-CHIP;10Kohm,5%,1/10W,TP,1608	1	SA
....4	DR416	2007-000090	R-CHIP;10Kohm,5%,1/10W,TP,1608	1	SA
....4	DR423	2007-000090	R-CHIP;10Kohm,5%,1/10W,TP,1608	1	SA

ELECTRONIC SERVICE TIRGOVISTE

Level	Loc. No.	Code No.	Description & Specification	Q'ty	SA/SNA
....4	DR424	2007-000090	R-CHIP;10Kohm,5%,1/10W,TP,1608	1	SA
....4	DR632	2007-000090	R-CHIP;10Kohm,5%,1/10W,TP,1608	1	SA
....4	DR633	2007-000090	R-CHIP;10Kohm,5%,1/10W,TP,1608	1	SA
....4	DR901	2007-000090	R-CHIP;10Kohm,5%,1/10W,TP,1608	1	SA
....4	DR903	2007-000090	R-CHIP;10Kohm,5%,1/10W,TP,1608	1	SA
....4	DR904	2007-000090	R-CHIP;10Kohm,5%,1/10W,TP,1608	1	SA
....4	DR918	2007-000090	R-CHIP;10Kohm,5%,1/10W,TP,1608	1	SA
....4	DR919	2007-000090	R-CHIP;10Kohm,5%,1/10W,TP,1608	1	SA
....4	DR920	2007-000090	R-CHIP;10Kohm,5%,1/10W,TP,1608	1	SA
....4	DR921	2007-000090	R-CHIP;10Kohm,5%,1/10W,TP,1608	1	SA
....4	DR922	2007-000090	R-CHIP;10Kohm,5%,1/10W,TP,1608	1	SA
....4	DR700	2007-000097	R-CHIP;47Kohm,5%,1/10W,TP,1608	1	SA
....4	DR706	2007-000097	R-CHIP;47Kohm,5%,1/10W,TP,1608	1	SA
....4	DR102	2007-000102	R-CHIP;100Kohm,5%,1/10W,TP,1608	1	SA
....4	DR408	2007-000113	R-CHIP;33ohm,5%,1/10W,TP,1608	1	SA
....4	DR409	2007-000113	R-CHIP;33ohm,5%,1/10W,TP,1608	1	SA
....4	DR410	2007-000113	R-CHIP;33ohm,5%,1/10W,TP,1608	1	SA
....4	DR411	2007-000113	R-CHIP;33ohm,5%,1/10W,TP,1608	1	SA
....4	DR412	2007-000113	R-CHIP;33ohm,5%,1/10W,TP,1608	1	SA
....4	DR413	2007-000113	R-CHIP;33ohm,5%,1/10W,TP,1608	1	SA
....4	DR414	2007-000113	R-CHIP;33ohm,5%,1/10W,TP,1608	1	SA
....4	DR415	2007-000113	R-CHIP;33ohm,5%,1/10W,TP,1608	1	SA
....4	DR601	2007-000113	R-CHIP;33ohm,5%,1/10W,TP,1608	1	SA
....4	DR908	2007-000113	R-CHIP;33ohm,5%,1/10W,TP,1608	1	SA
....4	DR909	2007-000113	R-CHIP;33ohm,5%,1/10W,TP,1608	1	SA
....4	DR910	2007-000113	R-CHIP;33ohm,5%,1/10W,TP,1608	1	SA
....4	DR911	2007-000113	R-CHIP;33ohm,5%,1/10W,TP,1608	1	SA
....4	DR912	2007-000113	R-CHIP;33ohm,5%,1/10W,TP,1608	1	SA
....4	DR913	2007-000113	R-CHIP;33ohm,5%,1/10W,TP,1608	1	SA
....4	DR914	2007-000113	R-CHIP;33ohm,5%,1/10W,TP,1608	1	SA
....4	DR915	2007-000113	R-CHIP;33ohm,5%,1/10W,TP,1608	1	SA
....4	DR999	2007-000113	R-CHIP;33ohm,5%,1/10W,TP,1608	1	SA
....4	DR101	2007-000119	R-CHIP;560ohm,5%,1/10W,TP,1608	1	SA
....4	DR173	2007-000372	R-CHIP;130ohm,5%,1/10W,TP,1608	1	SA
....4	DR205	2007-000372	R-CHIP;130ohm,5%,1/10W,TP,1608	1	SA
....4	DR132	2007-000539	R-CHIP;200ohm,5%,1/10W,TP,1608	1	SA
....4	DR133	2007-000539	R-CHIP;200ohm,5%,1/10W,TP,1608	1	SA
....4	DR134	2007-000539	R-CHIP;200ohm,5%,1/10W,TP,1608	1	SA
....4	DR135	2007-000539	R-CHIP;200ohm,5%,1/10W,TP,1608	1	SA
....4	DR167	2007-000539	R-CHIP;200ohm,5%,1/10W,TP,1608	1	SA
....4	DR800	2007-000763	R-CHIP;330ohm,1%,1/10W,TP,1608	1	SA
....4	DR801	2007-000763	R-CHIP;330ohm,1%,1/10W,TP,1608	1	SA
....4	DR802	2007-000763	R-CHIP;330ohm,1%,1/10W,TP,1608	1	SA
....4	DR803	2007-000763	R-CHIP;330ohm,1%,1/10W,TP,1608	1	SA
....4	DR804	2007-000763	R-CHIP;330ohm,1%,1/10W,TP,1608	1	SA
....4	DR805	2007-000763	R-CHIP;330ohm,1%,1/10W,TP,1608	1	SA
....4	DR806	2007-000763	R-CHIP;330ohm,1%,1/10W,TP,1608	1	SA
....4	DR807	2007-000763	R-CHIP;330ohm,1%,1/10W,TP,1608	1	SA
....4	DR420	2007-001167	R-CHIP;75ohm,5%,1/10W,TP,1608	1	SA
....4	DR421	2007-001167	R-CHIP;75ohm,5%,1/10W,TP,1608	1	SA
....4	DRA103	2011-001011	R-NET;10Kohm,5%,1/16W,L,CHIP,8P,TP,3.2x1	1	SA
....4	DRA401	2011-001011	R-NET;10Kohm,5%,1/16W,L,CHIP,8P,TP,3.2x1	1	SA
....4	DRA108	2011-001410	R-NET;120OHM,5%,1/16W,L,CHIP,8P,TP,3.2X1	1	SA
....4	DRA109	2011-001410	R-NET;120OHM,5%,1/16W,L,CHIP,8P,TP,3.2X1	1	SA
....4	DRA110	2011-001410	R-NET;120OHM,5%,1/16W,L,CHIP,8P,TP,3.2X1	1	SA
....4	DRA111	2011-001410	R-NET;120OHM,5%,1/16W,L,CHIP,8P,TP,3.2X1	1	SA
....4	DRA112	2011-001410	R-NET;120OHM,5%,1/16W,L,CHIP,8P,TP,3.2X1	1	SA
....4	DRA113	2011-001410	R-NET;120OHM,5%,1/16W,L,CHIP,8P,TP,3.2X1	1	SA
....4	DRA114	2011-001410	R-NET;120OHM,5%,1/16W,L,CHIP,8P,TP,3.2X1	1	SA
....4	DRA115	2011-001410	R-NET;120OHM,5%,1/16W,L,CHIP,8P,TP,3.2X1	1	SA

ELECTRONIC SERVICE TIRGOVISTE

Level	Loc. No.	Code No.	Description & Specification	Q'ty	SA/SNA
....4	DRA116	2011-001410	R-NET;120OHM,5%,1/16W,L,CHIP,8P,TP,3.2X1	1	SA
....4	DRA117	2011-001410	R-NET;120OHM,5%,1/16W,L,CHIP,8P,TP,3.2X1	1	SA
....4	DRA118	2011-001410	R-NET;120OHM,5%,1/16W,L,CHIP,8P,TP,3.2X1	1	SA
....4	DRA119	2011-001410	R-NET;120OHM,5%,1/16W,L,CHIP,8P,TP,3.2X1	1	SA
....4	DRA120	2011-001410	R-NET;120OHM,5%,1/16W,L,CHIP,8P,TP,3.2X1	1	SA
....4	DRA121	2011-001410	R-NET;120OHM,5%,1/16W,L,CHIP,8P,TP,3.2X1	1	SA
....4	DRA122	2011-001410	R-NET;120OHM,5%,1/16W,L,CHIP,8P,TP,3.2X1	1	SA
....4	DRA123	2011-001410	R-NET;120OHM,5%,1/16W,L,CHIP,8P,TP,3.2X1	1	SA
....4	DRA124	2011-001410	R-NET;120OHM,5%,1/16W,L,CHIP,8P,TP,3.2X1	1	SA
....4	DRA125	2011-001410	R-NET;120OHM,5%,1/16W,L,CHIP,8P,TP,3.2X1	1	SA
....4	DC100	2203-000257	C-CER,CHIP;10nF,10%,50V,X7R,1608	1	SA
....4	DC102	2203-000257	C-CER,CHIP;10nF,10%,50V,X7R,1608	1	SA
....4	DC105	2203-000257	C-CER,CHIP;10nF,10%,50V,X7R,1608	1	SA
....4	DC107	2203-000257	C-CER,CHIP;10nF,10%,50V,X7R,1608	1	SA
....4	DC109	2203-000257	C-CER,CHIP;10nF,10%,50V,X7R,1608	1	SA
....4	DC111	2203-000257	C-CER,CHIP;10nF,10%,50V,X7R,1608	1	SA
....4	DC112	2203-000257	C-CER,CHIP;10nF,10%,50V,X7R,1608	1	SA
....4	DC114	2203-000257	C-CER,CHIP;10nF,10%,50V,X7R,1608	1	SA
....4	DC116	2203-000257	C-CER,CHIP;10nF,10%,50V,X7R,1608	1	SA
....4	DC118	2203-000257	C-CER,CHIP;10nF,10%,50V,X7R,1608	1	SA
....4	DC801	2203-000659	C-CER,CHIP;0.27nF,5%,50V,C0G,1608	1	SA
....4	DC804	2203-000659	C-CER,CHIP;0.27nF,5%,50V,C0G,1608	1	SA
....4	DC807	2203-000659	C-CER,CHIP;0.27nF,5%,50V,C0G,1608	1	SA
....4	DC810	2203-000659	C-CER,CHIP;0.27nF,5%,50V,C0G,1608	1	SA
....4	DC155	2203-001630	C-CER,CHIP;330nF,+80-20%,16V,Y5V,1608	1	SA
....4	DC700	2203-001630	C-CER,CHIP;330nF,+80-20%,16V,Y5V,1608	1	SA
....4	DC701	2203-001630	C-CER,CHIP;330nF,+80-20%,16V,Y5V,1608	1	SA
....4	DC101	2203-005005	C-CER,CHIP;100nF,10%,16V,X7R,1608	1	SA
....4	DC103	2203-005005	C-CER,CHIP;100nF,10%,16V,X7R,1608	1	SA
....4	DC104	2203-005005	C-CER,CHIP;100nF,10%,16V,X7R,1608	1	SA
....4	DC106	2203-005005	C-CER,CHIP;100nF,10%,16V,X7R,1608	1	SA
....4	DC108	2203-005005	C-CER,CHIP;100nF,10%,16V,X7R,1608	1	SA
....4	DC110	2203-005005	C-CER,CHIP;100nF,10%,16V,X7R,1608	1	SA
....4	DC113	2203-005005	C-CER,CHIP;100nF,10%,16V,X7R,1608	1	SA
....4	DC115	2203-005005	C-CER,CHIP;100nF,10%,16V,X7R,1608	1	SA
....4	DC117	2203-005005	C-CER,CHIP;100nF,10%,16V,X7R,1608	1	SA
....4	DC119	2203-005005	C-CER,CHIP;100nF,10%,16V,X7R,1608	1	SA
....4	DC120	2203-005005	C-CER,CHIP;100nF,10%,16V,X7R,1608	1	SA
....4	DC126	2203-005005	C-CER,CHIP;100nF,10%,16V,X7R,1608	1	SA
....4	DC127	2203-005005	C-CER,CHIP;100nF,10%,16V,X7R,1608	1	SA
....4	DC128	2203-005005	C-CER,CHIP;100nF,10%,16V,X7R,1608	1	SA
....4	DC129	2203-005005	C-CER,CHIP;100nF,10%,16V,X7R,1608	1	SA
....4	DC130	2203-005005	C-CER,CHIP;100nF,10%,16V,X7R,1608	1	SA
....4	DC131	2203-005005	C-CER,CHIP;100nF,10%,16V,X7R,1608	1	SA
....4	DC132	2203-005005	C-CER,CHIP;100nF,10%,16V,X7R,1608	1	SA
....4	DC133	2203-005005	C-CER,CHIP;100nF,10%,16V,X7R,1608	1	SA
....4	DC134	2203-005005	C-CER,CHIP;100nF,10%,16V,X7R,1608	1	SA
....4	DC135	2203-005005	C-CER,CHIP;100nF,10%,16V,X7R,1608	1	SA
....4	DC136	2203-005005	C-CER,CHIP;100nF,10%,16V,X7R,1608	1	SA
....4	DC137	2203-005005	C-CER,CHIP;100nF,10%,16V,X7R,1608	1	SA
....4	DC138	2203-005005	C-CER,CHIP;100nF,10%,16V,X7R,1608	1	SA
....4	DC139	2203-005005	C-CER,CHIP;100nF,10%,16V,X7R,1608	1	SA
....4	DC140	2203-005005	C-CER,CHIP;100nF,10%,16V,X7R,1608	1	SA
....4	DC141	2203-005005	C-CER,CHIP;100nF,10%,16V,X7R,1608	1	SA
....4	DC142	2203-005005	C-CER,CHIP;100nF,10%,16V,X7R,1608	1	SA
....4	DC143	2203-005005	C-CER,CHIP;100nF,10%,16V,X7R,1608	1	SA
....4	DC144	2203-005005	C-CER,CHIP;100nF,10%,16V,X7R,1608	1	SA
....4	DC145	2203-005005	C-CER,CHIP;100nF,10%,16V,X7R,1608	1	SA
....4	DC146	2203-005005	C-CER,CHIP;100nF,10%,16V,X7R,1608	1	SA
....4	DC147	2203-005005	C-CER,CHIP;100nF,10%,16V,X7R,1608	1	SA

ELECTRONIC SERVICE TIRGOVISTE

Level	Loc. No.	Code No.	Description & Specification	Q'ty	SA/SNA
....4	DC148	2203-005005	C-CER,CHIP;100nF,10%,16V,X7R,1608	1	SA
....4	DC149	2203-005005	C-CER,CHIP;100nF,10%,16V,X7R,1608	1	SA
....4	DC150	2203-005005	C-CER,CHIP;100nF,10%,16V,X7R,1608	1	SA
....4	DC151	2203-005005	C-CER,CHIP;100nF,10%,16V,X7R,1608	1	SA
....4	DC152	2203-005005	C-CER,CHIP;100nF,10%,16V,X7R,1608	1	SA
....4	DC153	2203-005005	C-CER,CHIP;100nF,10%,16V,X7R,1608	1	SA
....4	DC203	2203-005005	C-CER,CHIP;100nF,10%,16V,X7R,1608	1	SA
....4	DC400	2203-005005	C-CER,CHIP;100nF,10%,16V,X7R,1608	1	SA
....4	DC401	2203-005005	C-CER,CHIP;100nF,10%,16V,X7R,1608	1	SA
....4	DC402	2203-005005	C-CER,CHIP;100nF,10%,16V,X7R,1608	1	SA
....4	DC403	2203-005005	C-CER,CHIP;100nF,10%,16V,X7R,1608	1	SA
....4	DC404	2203-005005	C-CER,CHIP;100nF,10%,16V,X7R,1608	1	SA
....4	DC500	2203-005005	C-CER,CHIP;100nF,10%,16V,X7R,1608	1	SA
....4	DC501	2203-005005	C-CER,CHIP;100nF,10%,16V,X7R,1608	1	SA
....4	DC502	2203-005005	C-CER,CHIP;100nF,10%,16V,X7R,1608	1	SA
....4	DC503	2203-005005	C-CER,CHIP;100nF,10%,16V,X7R,1608	1	SA
....4	DC504	2203-005005	C-CER,CHIP;100nF,10%,16V,X7R,1608	1	SA
....4	DC505	2203-005005	C-CER,CHIP;100nF,10%,16V,X7R,1608	1	SA
....4	DC506	2203-005005	C-CER,CHIP;100nF,10%,16V,X7R,1608	1	SA
....4	DC507	2203-005005	C-CER,CHIP;100nF,10%,16V,X7R,1608	1	SA
....4	DC508	2203-005005	C-CER,CHIP;100nF,10%,16V,X7R,1608	1	SA
....4	DC509	2203-005005	C-CER,CHIP;100nF,10%,16V,X7R,1608	1	SA
....4	DC510	2203-005005	C-CER,CHIP;100nF,10%,16V,X7R,1608	1	SA
....4	DC511	2203-005005	C-CER,CHIP;100nF,10%,16V,X7R,1608	1	SA
....4	DC512	2203-005005	C-CER,CHIP;100nF,10%,16V,X7R,1608	1	SA
....4	DC513	2203-005005	C-CER,CHIP;100nF,10%,16V,X7R,1608	1	SA
....4	DC514	2203-005005	C-CER,CHIP;100nF,10%,16V,X7R,1608	1	SA
....4	DC601	2203-005005	C-CER,CHIP;100nF,10%,16V,X7R,1608	1	SA
....4	DC612	2203-005005	C-CER,CHIP;100nF,10%,16V,X7R,1608	1	SA
....4	DC614	2203-005005	C-CER,CHIP;100nF,10%,16V,X7R,1608	1	SA
....4	DC631	2203-005005	C-CER,CHIP;100nF,10%,16V,X7R,1608	1	SA
....4	DC632	2203-005005	C-CER,CHIP;100nF,10%,16V,X7R,1608	1	SA
....4	DC633	2203-005005	C-CER,CHIP;100nF,10%,16V,X7R,1608	1	SA
....4	DC902	2203-005005	C-CER,CHIP;100nF,10%,16V,X7R,1608	1	SA
....4	DC903	2203-005005	C-CER,CHIP;100nF,10%,16V,X7R,1608	1	SA
....4	DC905	2203-005005	C-CER,CHIP;100nF,10%,16V,X7R,1608	1	SA
....4	DC906	2203-005005	C-CER,CHIP;100nF,10%,16V,X7R,1608	1	SA
....4	DC907	2203-005005	C-CER,CHIP;100nF,10%,16V,X7R,1608	1	SA
....4	DC909	2203-005005	C-CER,CHIP;100nF,10%,16V,X7R,1608	1	SA
....4	DC910	2203-005005	C-CER,CHIP;100nF,10%,16V,X7R,1608	1	SA
....4	DC915	2203-005005	C-CER,CHIP;100nF,10%,16V,X7R,1608	1	SA
....4	DC916	2203-005005	C-CER,CHIP;100nF,10%,16V,X7R,1608	1	SA
....4	DC921	2203-005005	C-CER,CHIP;100nF,10%,16V,X7R,1608	1	SA
....4	DC922	2203-005005	C-CER,CHIP;100nF,10%,16V,X7R,1608	1	SA
....4	DC9906	2203-005005	C-CER,CHIP;100nF,10%,16V,X7R,1608	1	SA
....4	DC121	2402-000108	C-AL,SMD;10uF,20%,16V,WT,TP,4.3x4.3x5.2m	1	SA
....4	DC122	2402-000108	C-AL,SMD;10uF,20%,16V,WT,TP,4.3x4.3x5.2m	1	SA
....4	DC123	2402-000108	C-AL,SMD;10uF,20%,16V,WT,TP,4.3x4.3x5.2m	1	SA
....4	DC124	2402-000108	C-AL,SMD;10uF,20%,16V,WT,TP,4.3x4.3x5.2m	1	SA
....4	DC125	2402-000108	C-AL,SMD;10uF,20%,16V,WT,TP,4.3x4.3x5.2m	1	SA
....4	DC602	2402-000108	C-AL,SMD;10uF,20%,16V,WT,TP,4.3x4.3x5.2m	1	SA
....4	DC154	2402-001128	C-AL,SMD;100UF,20%,16V,WT,TP,6.3X5.7MM	1	SA
....4	DC522	2402-001128	C-AL,SMD;100UF,20%,16V,WT,TP,6.3X5.7MM	1	SA
....4	DC611	2402-001128	C-AL,SMD;100UF,20%,16V,WT,TP,6.3X5.7MM	1	SA
....4	DC634	2402-001128	C-AL,SMD;100UF,20%,16V,WT,TP,6.3X5.7MM	1	SA
....4	DC901	2402-001128	C-AL,SMD;100UF,20%,16V,WT,TP,6.3X5.7MM	1	SA
....4	DC904	2402-001128	C-AL,SMD;100UF,20%,16V,WT,TP,6.3X5.7MM	1	SA
....4	DC635	2402-001158	C-AL,SMD;1UF,20%,50V,WT,TP,4X5.2MM	1	SA
....4	DC636	2402-001158	C-AL,SMD;1UF,20%,50V,WT,TP,4X5.2MM	1	SA
....4	DC637	2402-001159	C-AL,SMD;3.3UF,20%,50V,WT,TP,4X5.2MM	1	SA

ELECTRONIC SERVICE TIRGOVISTE

Level	Loc. No.	Code No.	Description & Specification	Q'ty	SA/SNA
....4	DC638	2402-001159	C-AL,SMD;3.3UF,20%,50V,WT,TP,4X5.2MM	1	SA
....4	DC202	2402-001216	C-AL,SMD;470uF,20%,16V,WT,TP,10.3x10.3x1	1	SA
....4	DC613	2402-001216	C-AL,SMD;470uF,20%,16V,WT,TP,10.3x10.3x1	1	SA
....4	T0052	2703-000125	INDUCTOR-SMD;10uH,10%,2012	1	SA
....4	T0052	2703-000125	INDUCTOR-SMD;10uH,10%,2012	1	SA
....4	T0052	2703-000125	INDUCTOR-SMD;10uH,10%,2012	1	SA
....4	T0052	2703-000125	INDUCTOR-SMD;10uH,10%,2012	1	SA
....4	DX601	2806-001308	OSCILLATOR-VCXO;27MHZ,-,30PF,TP,3.3V,50M	1	SA
....4	T0568	3301-001569	BEAD-SMD;600ohm,2012,1000mA,TP,520ohm/90	1	SNA
....4	T0568	3301-001569	BEAD-SMD;600ohm,2012,1000mA,TP,520ohm/90	1	SNA
....4	T0568	3301-001569	BEAD-SMD;600ohm,2012,1000mA,TP,520ohm/90	1	SNA
....4	T0568	3301-001569	BEAD-SMD;600ohm,2012,1000mA,TP,520ohm/90	1	SNA
....4	T0568	3301-001569	BEAD-SMD;600ohm,2012,1000mA,TP,520ohm/90	1	SNA
....4	T0568	3301-001569	BEAD-SMD;600ohm,2012,1000mA,TP,520ohm/90	1	SNA
....4	T0568	3301-001569	BEAD-SMD;600ohm,2012,1000mA,TP,520ohm/90	1	SNA
....4	T0568	3301-001569	BEAD-SMD;600ohm,2012,1000mA,TP,520ohm/90	1	SNA
....4	MP1.1	BN41-00684A	PCB-DIGITAL B/D;BORDEAUX,FR-4,6L,1.0,1.6	1	SNA
....4	M0018	BN97-00805L	ASSY MICOM;T-XXXX-XXXX,DTV MODULE,XEF,20	1	SA
.....5	IC115	1107-001475	IC-FLASH MEMORY;29LV320,32MBIT,4MX8/2MX1	1	SA
....4	IC104	0801-002172	IC-CMOS LOGIC;74LCX16244,BUFFER/LINE DRI	1	SA
....4	T0087	1203-003704	IC-POSI.FIXED REG.;G953-18T6U,SOT-223,3P	1	SA
1		BN91-01007H	ASSY SHIELD-AUO;LE37R74BD,37",IDTV	1	SNA
..2	M0081	6003-000115	SCREW-TAPTITE;BH,+,B,M3,L6,ZPC(BLK),SWRC	4	SNA
..2	M0081	6003-000115	SCREW-TAPTITE;BH,+,B,M3,L6,ZPC(BLK),SWRC	6	SNA
..2	M0081	6003-000115	SCREW-TAPTITE;BH,+,B,M3,L6,ZPC(BLK),SWRC	2	SNA
..2	M0081	6003-000115	SCREW-TAPTITE;BH,+,B,M3,L6,ZPC(BLK),SWRC	3	SNA
..2	M0081	6003-000115	SCREW-TAPTITE;BH,+,B,M3,L6,ZPC(BLK),SWRC	2	SNA
..2	M0081	6003-000115	SCREW-TAPTITE;BH,+,B,M3,L6,ZPC(BLK),SWRC	1	SNA
..2	M0081	6003-001003	SCREW-TAPTITE;BH,+,B,M4,L12,ZPC(BLK),SWR	1	SNA
..2	M0081	6003-001003	SCREW-TAPTITE;BH,+,B,M4,L12,ZPC(BLK),SWR	2	SNA
..2	M0081	6003-001003	SCREW-TAPTITE;BH,+,B,M4,L12,ZPC(BLK),SWR	2	SNA
..2	M0081	6003-001003	SCREW-TAPTITE;BH,+,B,M4,L12,ZPC(BLK),SWR	9	SNA
..2	M0081	6003-001003	SCREW-TAPTITE;BH,+,B,M4,L12,ZPC(BLK),SWR	2	SNA
..2	M0081	6003-001003	SCREW-TAPTITE;BH,+,B,M4,L12,ZPC(BLK),SWR	1	SNA
..2	CCM1	6006-000245	SCREW-MACHINE;WSP,PH,+,M4,L8,ZPC(YEL),SW	6	SNA
..2	CCM1	6006-000245	SCREW-MACHINE;WSP,PH,+,M4,L8,ZPC(YEL),SW	1	SNA
..2	T0076	BN39-00615D	CBF HARNESS;BORDEAUX,1617#22,3P,1P,RING,	1	SA
..2		BN61-02241A	BRACKET-PANEL SIDE;Bordeaux 37,SECC,T1.2	1	SA
..2		BN61-02242A	BRACKET-PANEL SIDE;Bordeaux 37,SECC,T1.2	1	SA
..2		BN61-02258A	BRACKET-STAND LINK;Bordeaux 40,SECC,T1.6	1	SA
..2	M0146	BN63-02462A	SHIELD CASE;CAMBRIDGE 32,SECC,T0.8,UK	1	SA
..2		BN96-03006A	ASSY BOARD P-HOLDER AV;32R71,EO,ABS+PMMA	1	SNA
...3		BN61-02193A	HOLDER-SIDE AV;32R71,EO,KO,SO,ABS+PMMA,H	1	SA
...3	T0578	BN64-00454A	INLAY AV;BORDEAUX,PS SHEET,T0.3,-,-,-,EO	1	SNA
...3	M0020	BN96-02439A	ASSY BOARD P-SUB AV SIDE;MILANO,CT5000-3	1	SA
...3	M2893	BN39-00672A	LEAD CONNECTOR;LNR329DX/XAA,UL2835#28,UL	1	SA
..2	T0159	BN96-03050A	ASSY PCB P-SMPS;Bordeaux 37 PFC,LE37R71B	1	SNA
..2	M2893	BN39-00603N	LEAD CONNECTOR;LE32R73BDX,UL1007#26,14P,	1	SA
..2	M2893	BN39-00721B	LEAD CONNECTOR-LVDS;LE37,UL1571#30,30P,3	1	SA
..2	T0447	BN96-03441A	ASSY BRACKET P-PANEL;37,SECC,BUILT-IN	1	SNA
...3	M0081	6003-000115	SCREW-TAPTITE;BH,+,B,M3,L6,ZPC(BLK),SWRC	2	SNA
...3	M0081	6003-000115	SCREW-TAPTITE;BH,+,B,M3,L6,ZPC(BLK),SWRC	2	SNA
...3	M0146	BN61-02239A	BRACKET-PANEL TOP;Bordeaux 37,SECC,T1.2	1	SNA
...3		BN61-02240A	BRACKET-PANEL BOTTOM;Bordeaux 37,SECC,T1	1	SNA
...3		BN61-02243A	BRACKET-GUIDE MAIN;Bordeaux 37,SECC,T1.2	1	SNA
...3		BN61-02244A	BRACKET-GUIDE POWER;Bordeaux 37,SECC,T1.	1	SNA
...3		BN61-02245A	BRACKET-GUIDE POWER;Bordeaux 37,SECC,T1.	1	SNA
...3	T0514	BN61-02393A	BRACKET-SUPPORT;CAMBRIDGE 32,SECC,T1.2	1	SA
...3	T0101	BN61-02427A	BRACKET-WALL;BORDEAUX 40,SECC,T1.2	1	SA

ELECTRONIC SERVICE TIBGOVISTE

Level	Loc. No.	Code No.	Description & Specification	Q'ty	SA/SNA
...3	M0131	BN63-02549A	GASKET;LE37R72B,Conductive Fabric,26mm,1	1	SA
...3	M0131	BN63-02628A	GASKET;Oxford,Conductive Fabric,8,12,300	1	SA
...3	M0131	BN63-02629A	GASKET;Oxford,Conductive Fabric,10,26,17	1	SA
..2	M2893	BH39-00362B	LEAD CONNECTOR;RE32**,UL1007#26,5P,150mm	1	SA
..2	M0114	BN61-02500A	HOLDER-WIRE;NYLON6.6,NATURAL	2	SA
..2	M2893	BN39-00691A	LEAD CONNECTOR;Torino-32,UL1007#26,16P,1	1	SA
..2		BN96-03590A	ASSY SHIELD P-PCB MAIN;CAMBRIDGE32,SECC	1	SNA
...3	T0603	BN63-02458A	SHIELD-PCB MAIN;CAMBRIDGE 32,SECC,T0.5,U	1	SA
...3	M0131	BN63-02627A	GASKET;Oxford,Conductive Fabric,8,13,30,	1	SA
1	M0045	BN92-01661T	ASSY ACCESSORY;LE37R74BDX/XEF	1	SNA
..2	M0045	BN96-02984T	ASSY ACCESSORY;LE37R74BDX/XEF	1	SA
...3	T0268	3903-000145	CBF-POWER CORD;DT,EU,FP3/YES,U(IEC C13-R	1	SA
...3	T0524	6902-000110	BAG PE;LDPE,T0.05,W250,L400,TRP,28,2	2	SNA
...3	ACCESSORY	AA68-03242E	MANUAL FLYER-01,SAFETY GUIDE;All Model,S	1	SNA
...3	ACCESSORY	AA68-03575C	MANUAL FLYER-01,REGISTRATION C;XEF,FRENC	1	SNA
...3	T0074	BN59-00516A	REMOCON;CAMBRIDGE,TM87B,45,CAMBRIDGE,EUR	1	SA
...3	ACCESSORY	BN63-01798A	CLOTH-CLEAN;RE40**,CLOTH,310,320,RHCM	1	SA
...3	T0531	BN63-02366A	COVER-BOTTOM;40R71,ABS+PMMA,HB,BK23,H/GL	1	SNA
...3	ACCESSORY	BN68-00514A	MANUAL FLYER-04,WARRANTY CARD;PDP/LCD TV	1	SNA
...3	T0059	BN68-00895A	MANUAL FLYER-CARD;COMM,SAMSUNG,W/P 5G,PR	1	SNA
...3	T0059	BN68-00907A	MANUAL FLYER-CARD;COMM,SAMSUNG,18 LANG,E	1	SNA
...3	T0511	BN68-01007C	MANUAL USERS;COMM,SAMSUNG,Eng/Fre,France	1	SNA
...3	ACCESSORY	BN69-01086A	BOX ACCESSORY-00;COMM,SW1,YEL,-,W573,D63	1	SNA
...3	M0045	BN96-01800A	ASSY ACCESSORY;ROME32,SCREW	1	SA
....4	T0081	6002-001294	SCREW-TAPPING;BH,+,,M4,L16,ZPC(BLK)	4	SA
....4	ACCESSORY	6902-000128	BAG ZIPPER;LDPE,T0.05,W200,L150,TRP,8,2-	1	SNA
1	M0113	BN92-01706A	ASSY P/MATERIAL;37R72,BORDEAUX-2	1	SNA
..2	T0376	6902-000061	BAG AIR;LDPE,T0.2,L1000,W500,TRP,,,	0.027	SNA
..2	T0376	6902-000379	BAG AIR;LDPE,T0.2,W1000,L1800,TRP,-,--	0.008	SNA
..2	T0524	6902-000524	BAG PE;HDPE/NITRON(DOUBLE),T0.015/T0.5(D	1	SNA
..2		6902-000604	BAG WRAPPING;LDPE,T0.02,W500,L10000,TRP,	6.8	SNA
1	M0003	BN92-01705C	ASSY BOX;37R74,EO(XEF,XEG),CAMBRIDGE-2	1	SNA
..2		BN69-01301C	BOX-01,SET;37R74,SY-05,A,YEL,A1,IDTV(GER	1.02	SA
1	M0019	BN92-01801R	ASSY LABEL;LE40R73BD,LE32R73BDX/XEF	1	SNA

ELECTRONIC SERVICE TIRGOVISTE

6-7 LE40R74BDX/XEF Parts List

Level	Loc. No.	Code No.	Description & Specification	Q'ty	SA/SNA
0		LE40R74BDX/XEF	LE40R74BD,R62C/40R72-GLY,40,LCD-TV,FRANC	0	
1	M0216	BN90-00847A	ASSY STAND;40R71,BORDEAUX	1	SNA
..2	T0081	6002-001294	SCREW-TAPPING;BH,+,,M4,L16,ZPC(BLK)	4	SA
..2	M0013	BN96-03016A	ASSY STAND P-BASE;40R71,ABS+PMMA,HB,BK23	1	SA
...3	T0081	6002-001294	SCREW-TAPPING;BH,+,,M4,L16,ZPC(BLK)	4	SA
...3	M0081	6003-001239	SCREW-TAPTITE;FH,+,B,M4,L10,ZPC(YEL),SWR	4	SA
...3		BN61-02246A	GUIDE-STAND;40R71,ABS,V0,BLK	1	SNA
...3		BN61-02247A	HOLDER-SWIVEL RING;40R71,ACETAL,BLK	1	SNA
...3		BN61-02248A	HOLDER-SWIVEL RING;40R71,ACETAL NATUAL,T	1	SNA
...3		BN61-02249A	HOLDER-SWIVEL RING;40R71,ACETAL NATUAL,B	1	SNA
...3		BN61-02259A	BRACKET-STAND BOTTOM;BORDEAUX 40,SGHC,T3	1	SA
...3		BN61-02260A	BRACKET-HINGE SWIVEL;BORDEAUX 40,SGHC,T3	1	SA
...3	T0004	BN63-02364A	COVER-STAND BASE;40R71,ABS+PMMA,HB,BK23,	1	SNA
...3		BN63-02365A	COVER-STAND SUB;40R71,ABS+PMMA,HB,BK23,H	1	SNA
...3	T0132	BN73-00052A	RUBBER FOOT;ARES 17,SILICON,DIA 17 * T1.	4	SNA
...3		BN63-02183E	COVER-SHEET;Rhcm,PE Vinyl,T0.05,750mm,20	0.5	SNA
...3	T0514	BN61-02368A	BRACKET-SUPPORT;BORDEAUX 40,SECC,T1.2	2	SNA
1	M0002	BN90-00872A	ASSY COVER REAR;40R73,EO,CAMBRIDGE	1	SNA
..2	T0081	6002-001294	SCREW-TAPPING;BH,+,,M4,L16,ZPC(BLK)	1	SA
..2	T0081	6002-001294	SCREW-TAPPING;BH,+,,M4,L16,ZPC(BLK)	2	SA
..2	T0081	6002-001294	SCREW-TAPPING;BH,+,,M4,L16,ZPC(BLK)	14	SA
..2	M0013	BN96-03243A	ASSY COVER P-REAR;40R73,EO,ABS+PMMA,HB,B	1	SA
...3	T0101	BN61-02032A	BRACKET-WALL;32,MGM,SECC,T1.6	1	SA
...3	M0006	BN63-02457A	COVER-REAR;40R73,EO,ABS+PMMA,HB,BK23,H/G	1	SNA
...3	T0071	BN64-00444F	INLAY-TERMINAL;CAMBRIDGE32,37,40,PS SHEE	1	SA
...3		BN63-02183G	COVER-SHEET;Rhcm,PE Vinyl,T0.05,1100mm,2	1	SNA
...3	T0064	BN65-00002A	CLAMPER CORE;BORDEAUX,PP,V0,BLK	1	SA
1	M0001	BN90-00890B	ASSY COVER FRONT;40R74,EO,CAMBRIDGE	1	SNA
..2	M0081	6003-001003	SCREW-TAPTITE;BH,+,B,M4,L12,ZPC(BLK),SWR	1	SNA
..2	M0081	6003-001003	SCREW-TAPTITE;BH,+,B,M4,L12,ZPC(BLK),SWR	2	SNA
..2	T0003	BN96-03258B	ASSY COVER P-FRONT;40R74,EO,ABS+PMMA,HB,	1	SA
...3	M0081	6003-001003	SCREW-TAPTITE;BH,+,B,M4,L12,ZPC(BLK),SWR	2	SNA
...3	T0060	BN61-02432A	SPRING ETC;STS-304 SUS,D8.3,L7,T0.5	1	SA
...3		BN63-02183G	COVER-SHEET;Rhcm,PE Vinyl,T0.05,1100mm,2	1.983	SNA
...3	M0112	BN63-02399B	COVER-FRONT;40R74,EO,ABS+PMMA,HB,BK23,S/	1	SNA
...3	T0056	BN63-02401A	COVER-DECORATION;BORDEAUX2 40,EO,HIPS,HB	1	SNA
...3	T0059	BN64-00379A	INDICATOR LED;ROME-II,23,PC,CLEAR	1	SNA
...3	T0061	BN64-00453A	WINDOW-REMOCON;32R71,PC,V0,VIOLET,DIFFUS	1	SNA
...3	T0054	BN64-00465A	KNOB-DECORATION;26,32,37,40R72,ABS,HB,GR	1	SNA
...3	T0023	BN64-00466A	KNOB POWER;BORDEAUX-2,26,32,40,ABS HB,G4	1	SNA
...3		BN96-03404A	ASSY BOARD P-FUNCTION&KNOB;Bordeaux,CT50	1	SNA
....4	T0022	BN64-00442A	KNOB CONTROL;26,32,40R71,PC,BLK,ACRYL CL	1	SNA
....4	M0145	BN96-03045A	ASSY BOARD P-FUNCTION;BORDEAUX,FUNCTION	1	SA
...3	M0146	BN96-03438A	ASSY BOARD P-POWER;BORDEAUX2,CT5000-4150	1	SA
...3	T0069	AA60-00091P	SPACER-FELT;,FELT,500X10,BLK,T0.5	2	SNA
...3	T0069	AA60-00171L	SPACER-FELT;46L3,FELT,460,T0.5,10	2	SNA
..2	T0175	BN96-03266A	ASSY SPEAKER P;8ohm,Bordeuax2, 32,Left,1	1	SA
..2	T0175	BN96-03267A	ASSY SPEAKER P;8ohm,Bordeuax2, 32,Right,	1	SA
1	M0017	BN91-01006G	ASSY CHASSIS;LE32R73BDX/XEF	1	SNA
..2	M0014	BN94-00865A	ASSY PCB MAIN;LE32R73BDX/XEU,CAMBRIDGE	1	SA
...3	T0245	0202-001522	SOLDER-WIRE FLUX;LFA3-107,-,D1.2,96.5Sn/	0.25	SNA
...3	JA2007	3701-001294	CONNECTOR-DSUB;15P,3R,FEMALE,STRAIGHT,AU	1	SA
...3	CN902	3703-001600	CONNECTOR-BACK PANEL;32P,2R,FEMALE,ANGLE	1	SA
...3	CN902	3703-001600	CONNECTOR-BACK PANEL;32P,2R,FEMALE,ANGLE	1	SA
...3	CN4002	3711-004484	HEADER-BOARD TO CABLE;BOX,5P,1R,2mm,STRA	1	SA
...3	TEST3001	3711-004484	HEADER-BOARD TO CABLE;BOX,5P,1R,2mm,STRA	1	SA

ELECTRONIC SERVICE TIRGOVISTE

Level	Loc. No.	Code No.	Description & Specification	Q'ty	SA/SNA
...3	CN2002_32	3711-004909	HEADER-BOARD TO CABLE;BOX,14P,2R,2MM,ANG	1	SA
...3	CN4004	3711-005606	HEADER-BOARD TO CABLE;BOX,30P,2R,2mm,STR	1	SA
...3	CN1001	3711-005942	HEADER-BOARD TO CABLE;BOX,16P,1R,2mm,STR	1	SA
...3	JA2001	3722-000498	JACK-SCART;21P,-,SN,BLK,NO	1	SA
...3	JA2005	3722-000498	JACK-SCART;21P,-,SN,BLK,NO	1	SA
...3	JA2003	3722-001061	JACK-PHONE;1P,3.6PI,AG,BLK,N	1	SA
...3	JA2006	3722-001061	JACK-PHONE;1P,3.6PI,AG,BLK,N	1	SA
...3	JA2010	3722-002360	JACK-PIN;3P,AU,GRN/BLU/RED,STRAIGHT	1	SA
...3	JA2002	3722-002362	JACK-PIN;2P,Sn,WHT/RED,STRAIGHT	1	SA
...3	JA2004	3722-002362	JACK-PIN;2P,Sn,WHT/RED,STRAIGHT	1	SA
...3	JA2009	3722-002362	JACK-PIN;2P,Sn,WHT/RED,STRAIGHT	1	SA
...3	CIS3	BN40-00080A	TUNER;DNOS403ZH261B(S),DNOS403ZH261B(S),	1	SA
...3	T0852	BN96-01470A	ASSY BOARD P-OPTICAL;HP-P5581,OPTICAL	1	SA
....4	CN906	3707-001067	CONNECTOR-OPTICAL;PLUG,SM,-,4.4/2.0mm	1	SA
...3	T0510	BN97-00829A	ASSY SMD-MAIN;LE32R73BDX/XEU,CAMBRIDGE	1	SNA
....4	CIS05	0202-001477	SOLDER-CREAM;LST309-M,-,D20~45§-,96.5Sn/	3.571	SNA
....4	D2003	0401-001056	DIODE-SWITCHING;MMBD4148SE,100V,200mA,SO	1	SA
....4	D2010	0401-001056	DIODE-SWITCHING;MMBD4148SE,100V,200mA,SO	1	SA
....4	D2011	0401-001056	DIODE-SWITCHING;MMBD4148SE,100V,200mA,SO	1	SA
....4	D2012	0401-001056	DIODE-SWITCHING;MMBD4148SE,100V,200mA,SO	1	SA
....4	D2013	0401-001056	DIODE-SWITCHING;MMBD4148SE,100V,200mA,SO	1	SA
....4	D2016	0401-001056	DIODE-SWITCHING;MMBD4148SE,100V,200mA,SO	1	SA
....4	D2017	0401-001056	DIODE-SWITCHING;MMBD4148SE,100V,200mA,SO	1	SA
....4	D2018	0401-001056	DIODE-SWITCHING;MMBD4148SE,100V,200mA,SO	1	SA
....4	D2019	0401-001056	DIODE-SWITCHING;MMBD4148SE,100V,200mA,SO	1	SA
....4	D2020	0401-001056	DIODE-SWITCHING;MMBD4148SE,100V,200mA,SO	1	SA
....4	D2021	0401-001056	DIODE-SWITCHING;MMBD4148SE,100V,200mA,SO	1	SA
....4	D2022	0401-001056	DIODE-SWITCHING;MMBD4148SE,100V,200mA,SO	1	SA
....4	D2023	0401-001056	DIODE-SWITCHING;MMBD4148SE,100V,200mA,SO	1	SA
....4	D2032	0401-001056	DIODE-SWITCHING;MMBD4148SE,100V,200mA,SO	1	SA
....4	D2033	0401-001056	DIODE-SWITCHING;MMBD4148SE,100V,200mA,SO	1	SA
....4	D2034	0401-001056	DIODE-SWITCHING;MMBD4148SE,100V,200mA,SO	1	SA
....4	D2044	0401-001056	DIODE-SWITCHING;MMBD4148SE,100V,200mA,SO	1	SA
....4	D2057	0401-001056	DIODE-SWITCHING;MMBD4148SE,100V,200mA,SO	1	SA
....4	D5001	0401-001056	DIODE-SWITCHING;MMBD4148SE,100V,200mA,SO	1	SA
....4	D5002	0401-001056	DIODE-SWITCHING;MMBD4148SE,100V,200mA,SO	1	SA
....4	D5003	0401-001056	DIODE-SWITCHING;MMBD4148SE,100V,200mA,SO	1	SA
....4	D5004	0401-001056	DIODE-SWITCHING;MMBD4148SE,100V,200mA,SO	1	SA
....4	D5005	0401-001056	DIODE-SWITCHING;MMBD4148SE,100V,200mA,SO	1	SA
....4	D5006	0401-001056	DIODE-SWITCHING;MMBD4148SE,100V,200mA,SO	1	SA
....4	D1001	0402-000553	DIODE-RECTIFIER;SS24,40V,2A,DO-214AA,TP	1	SA
....4	D1004	0402-000553	DIODE-RECTIFIER;SS24,40V,2A,DO-214AA,TP	1	SA
....4	D1008	0403-000258	DIODE-ZENER;BZX84C5V6,5.2-6V,225mW,SOT-2	1	SA
....4	D3003	0403-000258	DIODE-ZENER;BZX84C5V6,5.2-6V,225mW,SOT-2	1	SA
....4	D2001	0403-000620	DIODE-ZENER;RLZ5.6B,5.45-5.73V,500mW,LL-	1	SA
....4	D2002	0403-000620	DIODE-ZENER;RLZ5.6B,5.45-5.73V,500mW,LL-	1	SA
....4	D2040	0403-000620	DIODE-ZENER;RLZ5.6B,5.45-5.73V,500mW,LL-	1	SA
....4	D2041	0403-000620	DIODE-ZENER;RLZ5.6B,5.45-5.73V,500mW,LL-	1	SA
....4	D2042	0403-000620	DIODE-ZENER;RLZ5.6B,5.45-5.73V,500mW,LL-	1	SA
....4	D2043	0403-000620	DIODE-ZENER;RLZ5.6B,5.45-5.73V,500mW,LL-	1	SA
....4	D2064	0403-000620	DIODE-ZENER;RLZ5.6B,5.45-5.73V,500mW,LL-	1	SA
....4	D2065	0403-000620	DIODE-ZENER;RLZ5.6B,5.45-5.73V,500mW,LL-	1	SA
....4	D3006	0403-000620	DIODE-ZENER;RLZ5.6B,5.45-5.73V,500mW,LL-	1	SA
....4	D3008	0403-000620	DIODE-ZENER;RLZ5.6B,5.45-5.73V,500mW,LL-	1	SA
....4	D4001	0403-000620	DIODE-ZENER;RLZ5.6B,5.45-5.73V,500mW,LL-	1	SA
....4	D4002	0403-000620	DIODE-ZENER;RLZ5.6B,5.45-5.73V,500mW,LL-	1	SA
....4	D4003	0403-000620	DIODE-ZENER;RLZ5.6B,5.45-5.73V,500mW,LL-	1	SA
....4	D4005	0403-000620	DIODE-ZENER;RLZ5.6B,5.45-5.73V,500mW,LL-	1	SA
....4	D4006	0403-000620	DIODE-ZENER;RLZ5.6B,5.45-5.73V,500mW,LL-	1	SA
....4	D4007	0403-000620	DIODE-ZENER;RLZ5.6B,5.45-5.73V,500mW,LL-	1	SA

ELECTRONICSERVICE TIRGOVISTE

Level	Loc. No.	Code No.	Description & Specification	Q'ty	SA/SNA
....4	D4008	0403-000620	DIODE-ZENER;RLZ5.6B,5.45-5.73V,500mW,LL-	1	SA
....4	D4009	0403-000620	DIODE-ZENER;RLZ5.6B,5.45-5.73V,500mW,LL-	1	SA
....4	D4010	0403-000620	DIODE-ZENER;RLZ5.6B,5.45-5.73V,500mW,LL-	1	SA
....4	D4011	0403-000620	DIODE-ZENER;RLZ5.6B,5.45-5.73V,500mW,LL-	1	SA
....4	D4012	0403-000620	DIODE-ZENER;RLZ5.6B,5.45-5.73V,500mW,LL-	1	SA
....4	D2004	0403-001016	DIODE-ZENER;RLZ6.2B,5.96-6.27V,500mW,LL-	1	SA
....4	D2009	0403-001169	DIODE-ZENER;RLZ16C,15.96-16.51V,500MW,LL	1	SA
....4	D2039	0403-001169	DIODE-ZENER;RLZ16C,15.96-16.51V,500MW,LL	1	SA
....4	D2005	0406-001172	DIODE-TVS;CDS3C30GTH,48V,0W,SMD	1	SA
....4	D2006	0406-001172	DIODE-TVS;CDS3C30GTH,48V,0W,SMD	1	SA
....4	D2007	0406-001172	DIODE-TVS;CDS3C30GTH,48V,0W,SMD	1	SA
....4	D2008	0406-001172	DIODE-TVS;CDS3C30GTH,48V,0W,SMD	1	SA
....4	D2014	0406-001172	DIODE-TVS;CDS3C30GTH,48V,0W,SMD	1	SA
....4	D2015	0406-001172	DIODE-TVS;CDS3C30GTH,48V,0W,SMD	1	SA
....4	D2024	0406-001172	DIODE-TVS;CDS3C30GTH,48V,0W,SMD	1	SA
....4	D2025	0406-001172	DIODE-TVS;CDS3C30GTH,48V,0W,SMD	1	SA
....4	D2026	0406-001172	DIODE-TVS;CDS3C30GTH,48V,0W,SMD	1	SA
....4	D2027	0406-001172	DIODE-TVS;CDS3C30GTH,48V,0W,SMD	1	SA
....4	D2028	0406-001172	DIODE-TVS;CDS3C30GTH,48V,0W,SMD	1	SA
....4	D2029	0406-001172	DIODE-TVS;CDS3C30GTH,48V,0W,SMD	1	SA
....4	D2030	0406-001172	DIODE-TVS;CDS3C30GTH,48V,0W,SMD	1	SA
....4	D2031	0406-001172	DIODE-TVS;CDS3C30GTH,48V,0W,SMD	1	SA
....4	D2035	0406-001172	DIODE-TVS;CDS3C30GTH,48V,0W,SMD	1	SA
....4	D2036	0406-001172	DIODE-TVS;CDS3C30GTH,48V,0W,SMD	1	SA
....4	D2037	0406-001172	DIODE-TVS;CDS3C30GTH,48V,0W,SMD	1	SA
....4	D2038	0406-001172	DIODE-TVS;CDS3C30GTH,48V,0W,SMD	1	SA
....4	D2051	0406-001172	DIODE-TVS;CDS3C30GTH,48V,0W,SMD	1	SA
....4	D2052	0406-001172	DIODE-TVS;CDS3C30GTH,48V,0W,SMD	1	SA
....4	D2054	0406-001172	DIODE-TVS;CDS3C30GTH,48V,0W,SMD	1	SA
....4	D2055	0406-001172	DIODE-TVS;CDS3C30GTH,48V,0W,SMD	1	SA
....4	D2056	0406-001172	DIODE-TVS;CDS3C30GTH,48V,0W,SMD	1	SA
....4	D1002	0407-000123	DIODE-ARRAY;DAN202K,80V,100mA,CA2-3,SOT-	1	SA
....4	D1009	0407-000123	DIODE-ARRAY;DAN202K,80V,100mA,CA2-3,SOT-	1	SA
....4	D3001	0407-000123	DIODE-ARRAY;DAN202K,80V,100mA,CA2-3,SOT-	1	SA
....4	D3002	0407-000123	DIODE-ARRAY;DAN202K,80V,100mA,CA2-3,SOT-	1	SA
....4	D3007_32	0407-000123	DIODE-ARRAY;DAN202K,80V,100mA,CA2-3,SOT-	1	SA
....4	Q1007	0501-000280	TR-SMALL SIGNAL;KSA1182,PNP,150MW,SOT-23	1	SA
....4	Q1001	0501-000342	TR-SMALL SIGNAL;KSC1623-Y,NPN,200mW,SOT-	1	SA
....4	Q1002	0501-000342	TR-SMALL SIGNAL;KSC1623-Y,NPN,200mW,SOT-	1	SA
....4	Q1005	0501-000342	TR-SMALL SIGNAL;KSC1623-Y,NPN,200mW,SOT-	1	SA
....4	Q1006	0501-000342	TR-SMALL SIGNAL;KSC1623-Y,NPN,200mW,SOT-	1	SA
....4	Q1008	0501-000342	TR-SMALL SIGNAL;KSC1623-Y,NPN,200mW,SOT-	1	SA
....4	Q1009	0501-000342	TR-SMALL SIGNAL;KSC1623-Y,NPN,200mW,SOT-	1	SA
....4	Q1010	0501-000342	TR-SMALL SIGNAL;KSC1623-Y,NPN,200mW,SOT-	1	SA
....4	Q1011	0501-000342	TR-SMALL SIGNAL;KSC1623-Y,NPN,200mW,SOT-	1	SA
....4	Q1013	0501-000342	TR-SMALL SIGNAL;KSC1623-Y,NPN,200mW,SOT-	1	SA
....4	Q1014	0501-000342	TR-SMALL SIGNAL;KSC1623-Y,NPN,200mW,SOT-	1	SA
....4	Q2001	0501-000342	TR-SMALL SIGNAL;KSC1623-Y,NPN,200mW,SOT-	1	SA
....4	Q3001	0501-000342	TR-SMALL SIGNAL;KSC1623-Y,NPN,200mW,SOT-	1	SA
....4	Q3003	0501-000342	TR-SMALL SIGNAL;KSC1623-Y,NPN,200mW,SOT-	1	SA
....4	Q3008	0501-000342	TR-SMALL SIGNAL;KSC1623-Y,NPN,200mW,SOT-	1	SA
....4	Q3010	0501-000342	TR-SMALL SIGNAL;KSC1623-Y,NPN,200mW,SOT-	1	SA
....4	Q3011	0501-000342	TR-SMALL SIGNAL;KSC1623-Y,NPN,200mW,SOT-	1	SA
....4	Q4001	0501-000342	TR-SMALL SIGNAL;KSC1623-Y,NPN,200mW,SOT-	1	SA
....4	Q5010	0501-000342	TR-SMALL SIGNAL;KSC1623-Y,NPN,200mW,SOT-	1	SA
....4	Q1003	0501-002080	TR-SMALL SIGNAL;2SC2412K,NPN,200mW,SC-59	1	SA
....4	Q1004	0501-002080	TR-SMALL SIGNAL;2SC2412K,NPN,200mW,SC-59	1	SA
....4	Q5011	0501-002080	TR-SMALL SIGNAL;2SC2412K,NPN,200mW,SC-59	1	SA
....4	Q409	0505-000110	FET-SILICON;2N7002,N,60V,115mA,7.5ohm,0.	1	SA
....4	Q409	0505-000110	FET-SILICON;2N7002,N,60V,115mA,7.5ohm,0.	1	SA

ELECTRONIC SERVICE TIRGOVISTE

Level	Loc. No.	Code No.	Description & Specification	Q'ty	SA/SNA
....4	Q409	0505-000110	FET-SILICON;2N7002,N,60V,115mA,7.5ohm,0.	1	SA
....4	Q409	0505-000110	FET-SILICON;2N7002,N,60V,115mA,7.5ohm,0.	1	SA
....4	Q409	0505-000110	FET-SILICON;2N7002,N,60V,115mA,7.5ohm,0.	1	SA
....4	Q409	0505-001170	FET-SILICON;SI9933ADY-T1,P,-20V,3.4A,0.0	1	SA
....4	IC104	0801-002095	IC-CMOS LOGIC;74LCX245,TRANSCEIVER,TSSOP	1	SA
....4	IC3002	0903-001432	IC-MICROCOMPUTER;M30840SGP,16Bit,LQFP,10	1	SA
....4	IC1003	1001-000164	IC-ANALOG MULTIPLEX;74HC4052,CMOS,SOP,16	1	SA
....4	IC1006	1001-000164	IC-ANALOG MULTIPLEX;74HC4052,CMOS,SOP,16	1	SA
....4	IC106	1001-001082	IC-VIDEO SWITCH;BA7657F,-,SOP,24P,300MIL	1	SA
....4	IC3006	1001-001109	IC-ANALOG SWITCH;FST3125M,BUS SWITCH & C	1	SA
....4	IC5005	1001-001109	IC-ANALOG SWITCH;FST3125M,BUS SWITCH & C	1	SA
....4	IC107	1002-001399	IC-D/A CONVERTER;PCM1754,24BIT,SSOP,16P,	1	SA
....4	IC110	1006-001076	IC-DRIVER/RECEIVER;MAX232ECWE+T,SOP,16P,	1	SA
....4	IC112	1103-000129	IC-EEPROM;24C02,2Kbit,256x8Bit,SOP,8P,5x	1	SA
....4	IC112	1103-000129	IC-EEPROM;24C02,2Kbit,256x8Bit,SOP,8P,5x	1	SA
....4	IC112	1103-001279	IC-EEPROM;24C32,32Kbit,4Kx8Bit,SOP,8P,5x	1	SA
....4	IC5002	1105-001538	IC-VIDEO RAM;K4D263238,-,128M,4x1Mx32Bit	1	SA
....4	DU410	1201-000166	IC-OP AMP;LM358,SOP,ST,8P,150MIL,DUAL,10	1	SA
....4	T0085	1201-002136	IC-AUDIO AMP;LM4810,MSOP,8P,3x3mm,DUAL,-	1	SA
....4	T0085	1201-002246	IC-AUDIO AMP;STA323W,SO,36P,15.9x11mm,-,	1	SA
....4	IC150	1203-001009	IC-SWITCH REG.;3172,SOP,8P,244MIL,PLASTI	1	SA
....4	IC3009	1203-001559	IC-RESET;DS1834A,SOIC,8P,150MIL,PLASTIC,	1	SA
....4	T0087	1203-001815	IC-POSI.FIXED REG.;78M09,TO-252,3P,-,PLA	1	SA
....4	T0087	1203-001816	IC-POSI.FIXED REG.;78M08,TO-252,3P,-,PLA	1	SA
....4	IC3008_32	1203-001824	IC-VOL. DETECTOR;7042,SOT-89,3P,-,PLASTI	1	SA
....4	T0087	1203-002842	IC-POSI.FIXED REG.;AP1117D-33A,TO-252,3P	1	SA
....4	T0087	1203-002842	IC-POSI.FIXED REG.;AP1117D-33A,TO-252,3P	1	SA
....4	T0087	1203-002855	IC-POSI.FIXED REG.;MC33269DTRK-5.0,DPRK,	1	SA
....4	T0087	1203-002974	IC-POSI.FIXED REG.;AP1117D-25A,TO-252,3P	1	SA
....4	T0170	1203-003059	IC-SWITCH VOL. REG.;MP1583,SOIC,8P,4.9x3	1	SA
....4	IC1009	1204-002464	IC-AUDIO PROCESSOR;STV8257DSX,TQFP,80P,1	1	SA
....4	IC118	1204-002503	IC-VIDEO PROCESS;SVP-PX56-7256,PQFP,256P	1	SNA
....4	R5026	2007-000043	R-CHIP;1Kohm,1%,1/10W,TP,1608	1	SA
....4	R5029	2007-000043	R-CHIP;1Kohm,1%,1/10W,TP,1608	1	SA
....4	R3088	2007-000052	R-CHIP;10Kohm,1%,1/10W,TP,1608	1	SA
....4	R3100	2007-000052	R-CHIP;10Kohm,1%,1/10W,TP,1608	1	SA
....4	R3101	2007-000052	R-CHIP;10Kohm,1%,1/10W,TP,1608	1	SA
....4	R3102	2007-000052	R-CHIP;10Kohm,1%,1/10W,TP,1608	1	SA
....4	R3103	2007-000052	R-CHIP;10Kohm,1%,1/10W,TP,1608	1	SA
....4	R3104	2007-000052	R-CHIP;10Kohm,1%,1/10W,TP,1608	1	SA
....4	R3105	2007-000052	R-CHIP;10Kohm,1%,1/10W,TP,1608	1	SA
....4	R3106	2007-000052	R-CHIP;10Kohm,1%,1/10W,TP,1608	1	SA
....4	R3107	2007-000052	R-CHIP;10Kohm,1%,1/10W,TP,1608	1	SA
....4	R3130	2007-000052	R-CHIP;10Kohm,1%,1/10W,TP,1608	1	SA
....4	R3141	2007-000052	R-CHIP;10Kohm,1%,1/10W,TP,1608	1	SA
....4	R5013	2007-000060	R-CHIP;100Kohm,1%,1/10W,TP,1608	1	SA
....4	R1066	2007-000067	R-CHIP;15Kohm,1%,1/10W,TP,1608	1	SA
....4	R1059	2007-000070	R-CHIP;0ohm,5%,1/10W,TP,1608	1	SA
....4	R1085	2007-000070	R-CHIP;0ohm,5%,1/10W,TP,1608	1	SA
....4	R1086	2007-000070	R-CHIP;0ohm,5%,1/10W,TP,1608	1	SA
....4	R1087	2007-000070	R-CHIP;0ohm,5%,1/10W,TP,1608	1	SA
....4	R2055	2007-000070	R-CHIP;0ohm,5%,1/10W,TP,1608	1	SA
....4	R2064	2007-000070	R-CHIP;0ohm,5%,1/10W,TP,1608	1	SA
....4	R2080	2007-000070	R-CHIP;0ohm,5%,1/10W,TP,1608	1	SA
....4	R3003	2007-000070	R-CHIP;0ohm,5%,1/10W,TP,1608	1	SA
....4	R3019	2007-000070	R-CHIP;0ohm,5%,1/10W,TP,1608	1	SA
....4	R3024	2007-000070	R-CHIP;0ohm,5%,1/10W,TP,1608	1	SA
....4	R3025_LVDS	2007-000070	R-CHIP;0ohm,5%,1/10W,TP,1608	1	SA
....4	R3026	2007-000070	R-CHIP;0ohm,5%,1/10W,TP,1608	1	SA
....4	R3027	2007-000070	R-CHIP;0ohm,5%,1/10W,TP,1608	1	SA

ELECTRONIC SERVICE TIRGOVISTE

Level	Loc. No.	Code No.	Description & Specification	Q'ty	SA/SNA
....4	R3028	2007-000070	R-CHIP;0ohm,5%,1/10W,TP,1608	1	SA
....4	R3029	2007-000070	R-CHIP;0ohm,5%,1/10W,TP,1608	1	SA
....4	R3031	2007-000070	R-CHIP;0ohm,5%,1/10W,TP,1608	1	SA
....4	R3032	2007-000070	R-CHIP;0ohm,5%,1/10W,TP,1608	1	SA
....4	R3033	2007-000070	R-CHIP;0ohm,5%,1/10W,TP,1608	1	SA
....4	R3035	2007-000070	R-CHIP;0ohm,5%,1/10W,TP,1608	1	SA
....4	R3037	2007-000070	R-CHIP;0ohm,5%,1/10W,TP,1608	1	SA
....4	R3039	2007-000070	R-CHIP;0ohm,5%,1/10W,TP,1608	1	SA
....4	R3040	2007-000070	R-CHIP;0ohm,5%,1/10W,TP,1608	1	SA
....4	R3041	2007-000070	R-CHIP;0ohm,5%,1/10W,TP,1608	1	SA
....4	R3043	2007-000070	R-CHIP;0ohm,5%,1/10W,TP,1608	1	SA
....4	R3047_LVDS	2007-000070	R-CHIP;0ohm,5%,1/10W,TP,1608	1	SA
....4	R3089	2007-000070	R-CHIP;0ohm,5%,1/10W,TP,1608	1	SA
....4	R3090	2007-000070	R-CHIP;0ohm,5%,1/10W,TP,1608	1	SA
....4	R3117	2007-000070	R-CHIP;0ohm,5%,1/10W,TP,1608	1	SA
....4	R3118	2007-000070	R-CHIP;0ohm,5%,1/10W,TP,1608	1	SA
....4	R3132	2007-000070	R-CHIP;0ohm,5%,1/10W,TP,1608	1	SA
....4	R4001	2007-000070	R-CHIP;0ohm,5%,1/10W,TP,1608	1	SA
....4	R4002	2007-000070	R-CHIP;0ohm,5%,1/10W,TP,1608	1	SA
....4	R4003	2007-000070	R-CHIP;0ohm,5%,1/10W,TP,1608	1	SA
....4	R4012	2007-000070	R-CHIP;0ohm,5%,1/10W,TP,1608	1	SA
....4	R4016	2007-000070	R-CHIP;0ohm,5%,1/10W,TP,1608	1	SA
....4	R4017	2007-000070	R-CHIP;0ohm,5%,1/10W,TP,1608	1	SA
....4	R4018	2007-000070	R-CHIP;0ohm,5%,1/10W,TP,1608	1	SA
....4	R4019	2007-000070	R-CHIP;0ohm,5%,1/10W,TP,1608	1	SA
....4	R4032	2007-000070	R-CHIP;0ohm,5%,1/10W,TP,1608	1	SA
....4	R4033	2007-000070	R-CHIP;0ohm,5%,1/10W,TP,1608	1	SA
....4	R4035	2007-000070	R-CHIP;0ohm,5%,1/10W,TP,1608	1	SA
....4	R4051_32	2007-000070	R-CHIP;0ohm,5%,1/10W,TP,1608	1	SA
....4	R4086_EN	2007-000070	R-CHIP;0ohm,5%,1/10W,TP,1608	1	SA
....4	R4090	2007-000070	R-CHIP;0ohm,5%,1/10W,TP,1608	1	SA
....4	R5012	2007-000070	R-CHIP;0ohm,5%,1/10W,TP,1608	1	SA
....4	R5014	2007-000070	R-CHIP;0ohm,5%,1/10W,TP,1608	1	SA
....4	R5068	2007-000070	R-CHIP;0ohm,5%,1/10W,TP,1608	1	SA
....4	R5076	2007-000070	R-CHIP;0ohm,5%,1/10W,TP,1608	1	SA
....4	R5084	2007-000070	R-CHIP;0ohm,5%,1/10W,TP,1608	1	SA
....4	R5087	2007-000070	R-CHIP;0ohm,5%,1/10W,TP,1608	1	SA
....4	R5099	2007-000070	R-CHIP;0ohm,5%,1/10W,TP,1608	1	SA
....4	R5100	2007-000070	R-CHIP;0ohm,5%,1/10W,TP,1608	1	SA
....4	R5101	2007-000070	R-CHIP;0ohm,5%,1/10W,TP,1608	1	SA
....4	R5115	2007-000070	R-CHIP;0ohm,5%,1/10W,TP,1608	1	SA
....4	R5116	2007-000070	R-CHIP;0ohm,5%,1/10W,TP,1608	1	SA
....4	R5117	2007-000070	R-CHIP;0ohm,5%,1/10W,TP,1608	1	SA
....4	R5120	2007-000070	R-CHIP;0ohm,5%,1/10W,TP,1608	1	SA
....4	R1084	2007-000071	R-CHIP;22ohm,5%,1/10W,TP,1608	1	SA
....4	R1095	2007-000071	R-CHIP;22ohm,5%,1/10W,TP,1608	1	SA
....4	R2050	2007-000071	R-CHIP;22ohm,5%,1/10W,TP,1608	1	SA
....4	R2063	2007-000071	R-CHIP;22ohm,5%,1/10W,TP,1608	1	SA
....4	R2106	2007-000071	R-CHIP;22ohm,5%,1/10W,TP,1608	1	SA
....4	R2107	2007-000071	R-CHIP;22ohm,5%,1/10W,TP,1608	1	SA
....4	R2108	2007-000071	R-CHIP;22ohm,5%,1/10W,TP,1608	1	SA
....4	R2109	2007-000071	R-CHIP;22ohm,5%,1/10W,TP,1608	1	SA
....4	R2110	2007-000071	R-CHIP;22ohm,5%,1/10W,TP,1608	1	SA
....4	R2111	2007-000071	R-CHIP;22ohm,5%,1/10W,TP,1608	1	SA
....4	R2112	2007-000071	R-CHIP;22ohm,5%,1/10W,TP,1608	1	SA
....4	R2113	2007-000071	R-CHIP;22ohm,5%,1/10W,TP,1608	1	SA
....4	R4015	2007-000071	R-CHIP;22ohm,5%,1/10W,TP,1608	1	SA
....4	R4020	2007-000071	R-CHIP;22ohm,5%,1/10W,TP,1608	1	SA
....4	R4093	2007-000071	R-CHIP;22ohm,5%,1/10W,TP,1608	1	SA
....4	R5030	2007-000071	R-CHIP;22ohm,5%,1/10W,TP,1608	1	SA

ELECTRONIC SERVICE TIRGOVISTE

Level	Loc. No.	Code No.	Description & Specification	Q'ty	SA/SNA
....4	R5031	2007-000071	R-CHIP;22ohm,5%,1/10W,TP,1608	1	SA
....4	R5032	2007-000071	R-CHIP;22ohm,5%,1/10W,TP,1608	1	SA
....4	R5033	2007-000071	R-CHIP;22ohm,5%,1/10W,TP,1608	1	SA
....4	R5061	2007-000071	R-CHIP;22ohm,5%,1/10W,TP,1608	1	SA
....4	R5065	2007-000071	R-CHIP;22ohm,5%,1/10W,TP,1608	1	SA
....4	R5071	2007-000071	R-CHIP;22ohm,5%,1/10W,TP,1608	1	SA
....4	R5077	2007-000071	R-CHIP;22ohm,5%,1/10W,TP,1608	1	SA
....4	R5081	2007-000071	R-CHIP;22ohm,5%,1/10W,TP,1608	1	SA
....4	R5085	2007-000071	R-CHIP;22ohm,5%,1/10W,TP,1608	1	SA
....4	R5088	2007-000071	R-CHIP;22ohm,5%,1/10W,TP,1608	1	SA
....4	R5090	2007-000071	R-CHIP;22ohm,5%,1/10W,TP,1608	1	SA
....4	R5094	2007-000071	R-CHIP;22ohm,5%,1/10W,TP,1608	1	SA
....4	R5098	2007-000071	R-CHIP;22ohm,5%,1/10W,TP,1608	1	SA
....4	R5102	2007-000071	R-CHIP;22ohm,5%,1/10W,TP,1608	1	SA
....4	R5104	2007-000071	R-CHIP;22ohm,5%,1/10W,TP,1608	1	SA
....4	R5106	2007-000071	R-CHIP;22ohm,5%,1/10W,TP,1608	1	SA
....4	R5108	2007-000071	R-CHIP;22ohm,5%,1/10W,TP,1608	1	SA
....4	R1061	2007-000072	R-CHIP;47ohm,5%,1/10W,TP,1608	1	SA
....4	R1063	2007-000072	R-CHIP;47ohm,5%,1/10W,TP,1608	1	SA
....4	R2007	2007-000072	R-CHIP;47ohm,5%,1/10W,TP,1608	1	SA
....4	R2008	2007-000072	R-CHIP;47ohm,5%,1/10W,TP,1608	1	SA
....4	R2049	2007-000072	R-CHIP;47ohm,5%,1/10W,TP,1608	1	SA
....4	R2051	2007-000072	R-CHIP;47ohm,5%,1/10W,TP,1608	1	SA
....4	R4104	2007-000072	R-CHIP;47ohm,5%,1/10W,TP,1608	1	SA
....4	R4105	2007-000072	R-CHIP;47ohm,5%,1/10W,TP,1608	1	SA
....4	R4106	2007-000072	R-CHIP;47ohm,5%,1/10W,TP,1608	1	SA
....4	R4107	2007-000072	R-CHIP;47ohm,5%,1/10W,TP,1608	1	SA
....4	R4108	2007-000072	R-CHIP;47ohm,5%,1/10W,TP,1608	1	SA
....4	R4109	2007-000072	R-CHIP;47ohm,5%,1/10W,TP,1608	1	SA
....4	R4110	2007-000072	R-CHIP;47ohm,5%,1/10W,TP,1608	1	SA
....4	R4111	2007-000072	R-CHIP;47ohm,5%,1/10W,TP,1608	1	SA
....4	R4112	2007-000072	R-CHIP;47ohm,5%,1/10W,TP,1608	1	SA
....4	R4113	2007-000072	R-CHIP;47ohm,5%,1/10W,TP,1608	1	SA
....4	R5019	2007-000072	R-CHIP;47ohm,5%,1/10W,TP,1608	1	SA
....4	R5020	2007-000072	R-CHIP;47ohm,5%,1/10W,TP,1608	1	SA
....4	R5048	2007-000072	R-CHIP;47ohm,5%,1/10W,TP,1608	1	SA
....4	R5050	2007-000072	R-CHIP;47ohm,5%,1/10W,TP,1608	1	SA
....4	R1009	2007-000074	R-CHIP;100ohm,5%,1/10W,TP,1608	1	SA
....4	R1010	2007-000074	R-CHIP;100ohm,5%,1/10W,TP,1608	1	SA
....4	R1011	2007-000074	R-CHIP;100ohm,5%,1/10W,TP,1608	1	SA
....4	R1012	2007-000074	R-CHIP;100ohm,5%,1/10W,TP,1608	1	SA
....4	R1013	2007-000074	R-CHIP;100ohm,5%,1/10W,TP,1608	1	SA
....4	R1014	2007-000074	R-CHIP;100ohm,5%,1/10W,TP,1608	1	SA
....4	R1017	2007-000074	R-CHIP;100ohm,5%,1/10W,TP,1608	1	SA
....4	R1018	2007-000074	R-CHIP;100ohm,5%,1/10W,TP,1608	1	SA
....4	R1032	2007-000074	R-CHIP;100ohm,5%,1/10W,TP,1608	1	SA
....4	R1033	2007-000074	R-CHIP;100ohm,5%,1/10W,TP,1608	1	SA
....4	R1037	2007-000074	R-CHIP;100ohm,5%,1/10W,TP,1608	1	SA
....4	R1040	2007-000074	R-CHIP;100ohm,5%,1/10W,TP,1608	1	SA
....4	R1042	2007-000074	R-CHIP;100ohm,5%,1/10W,TP,1608	1	SA
....4	R1047	2007-000074	R-CHIP;100ohm,5%,1/10W,TP,1608	1	SA
....4	R1048	2007-000074	R-CHIP;100ohm,5%,1/10W,TP,1608	1	SA
....4	R1049	2007-000074	R-CHIP;100ohm,5%,1/10W,TP,1608	1	SA
....4	R1050	2007-000074	R-CHIP;100ohm,5%,1/10W,TP,1608	1	SA
....4	R1052	2007-000074	R-CHIP;100ohm,5%,1/10W,TP,1608	1	SA
....4	R1053	2007-000074	R-CHIP;100ohm,5%,1/10W,TP,1608	1	SA
....4	R1054	2007-000074	R-CHIP;100ohm,5%,1/10W,TP,1608	1	SA
....4	R1055	2007-000074	R-CHIP;100ohm,5%,1/10W,TP,1608	1	SA
....4	R1056	2007-000074	R-CHIP;100ohm,5%,1/10W,TP,1608	1	SA
....4	R1091	2007-000074	R-CHIP;100ohm,5%,1/10W,TP,1608	1	SA

ELECTRONIC SERVICE TIRGOVISTE

Level	Loc. No.	Code No.	Description & Specification	Q'ty	SA/SNA
....4	R1092	2007-000074	R-CHIP;100ohm,5%,1/10W,TP,1608	1	SA
....4	R1093	2007-000074	R-CHIP;100ohm,5%,1/10W,TP,1608	1	SA
....4	R2018	2007-000074	R-CHIP;100ohm,5%,1/10W,TP,1608	1	SA
....4	R2022	2007-000074	R-CHIP;100ohm,5%,1/10W,TP,1608	1	SA
....4	R2023	2007-000074	R-CHIP;100ohm,5%,1/10W,TP,1608	1	SA
....4	R2029	2007-000074	R-CHIP;100ohm,5%,1/10W,TP,1608	1	SA
....4	R2031	2007-000074	R-CHIP;100ohm,5%,1/10W,TP,1608	1	SA
....4	R2053	2007-000074	R-CHIP;100ohm,5%,1/10W,TP,1608	1	SA
....4	R2058	2007-000074	R-CHIP;100ohm,5%,1/10W,TP,1608	1	SA
....4	R2060	2007-000074	R-CHIP;100ohm,5%,1/10W,TP,1608	1	SA
....4	R2068	2007-000074	R-CHIP;100ohm,5%,1/10W,TP,1608	1	SA
....4	R2081	2007-000074	R-CHIP;100ohm,5%,1/10W,TP,1608	1	SA
....4	R2084	2007-000074	R-CHIP;100ohm,5%,1/10W,TP,1608	1	SA
....4	R2093	2007-000074	R-CHIP;100ohm,5%,1/10W,TP,1608	1	SA
....4	R3008	2007-000074	R-CHIP;100ohm,5%,1/10W,TP,1608	1	SA
....4	R3009	2007-000074	R-CHIP;100ohm,5%,1/10W,TP,1608	1	SA
....4	R3010	2007-000074	R-CHIP;100ohm,5%,1/10W,TP,1608	1	SA
....4	R3011	2007-000074	R-CHIP;100ohm,5%,1/10W,TP,1608	1	SA
....4	R3034	2007-000074	R-CHIP;100ohm,5%,1/10W,TP,1608	1	SA
....4	R3046	2007-000074	R-CHIP;100ohm,5%,1/10W,TP,1608	1	SA
....4	R3057	2007-000074	R-CHIP;100ohm,5%,1/10W,TP,1608	1	SA
....4	R3058	2007-000074	R-CHIP;100ohm,5%,1/10W,TP,1608	1	SA
....4	R3059	2007-000074	R-CHIP;100ohm,5%,1/10W,TP,1608	1	SA
....4	R3062	2007-000074	R-CHIP;100ohm,5%,1/10W,TP,1608	1	SA
....4	R3063	2007-000074	R-CHIP;100ohm,5%,1/10W,TP,1608	1	SA
....4	R3073	2007-000074	R-CHIP;100ohm,5%,1/10W,TP,1608	1	SA
....4	R3074	2007-000074	R-CHIP;100ohm,5%,1/10W,TP,1608	1	SA
....4	R3077	2007-000074	R-CHIP;100ohm,5%,1/10W,TP,1608	1	SA
....4	R3078	2007-000074	R-CHIP;100ohm,5%,1/10W,TP,1608	1	SA
....4	R3125	2007-000074	R-CHIP;100ohm,5%,1/10W,TP,1608	1	SA
....4	R3127	2007-000074	R-CHIP;100ohm,5%,1/10W,TP,1608	1	SA
....4	R3135	2007-000074	R-CHIP;100ohm,5%,1/10W,TP,1608	1	SA
....4	R4028	2007-000074	R-CHIP;100ohm,5%,1/10W,TP,1608	1	SA
....4	R4038	2007-000074	R-CHIP;100ohm,5%,1/10W,TP,1608	1	SA
....4	R4049	2007-000074	R-CHIP;100ohm,5%,1/10W,TP,1608	1	SA
....4	R4050	2007-000074	R-CHIP;100ohm,5%,1/10W,TP,1608	1	SA
....4	R4097	2007-000074	R-CHIP;100ohm,5%,1/10W,TP,1608	1	SA
....4	R4102	2007-000074	R-CHIP;100ohm,5%,1/10W,TP,1608	1	SA
....4	R4120	2007-000074	R-CHIP;100ohm,5%,1/10W,TP,1608	1	SA
....4	R5010	2007-000074	R-CHIP;100ohm,5%,1/10W,TP,1608	1	SA
....4	R5066	2007-000074	R-CHIP;100ohm,5%,1/10W,TP,1608	1	SA
....4	R5069	2007-000074	R-CHIP;100ohm,5%,1/10W,TP,1608	1	SA
....4	R2001	2007-000076	R-CHIP;330ohm,5%,1/10W,TP,1608	1	SA
....4	R2005	2007-000076	R-CHIP;330ohm,5%,1/10W,TP,1608	1	SA
....4	R2035	2007-000076	R-CHIP;330ohm,5%,1/10W,TP,1608	1	SA
....4	R2040	2007-000076	R-CHIP;330ohm,5%,1/10W,TP,1608	1	SA
....4	R1098	2007-000077	R-CHIP;470ohm,5%,1/10W,TP,1608	1	SA
....4	R2004	2007-000077	R-CHIP;470ohm,5%,1/10W,TP,1608	1	SA
....4	R2006	2007-000077	R-CHIP;470ohm,5%,1/10W,TP,1608	1	SA
....4	R2033	2007-000077	R-CHIP;470ohm,5%,1/10W,TP,1608	1	SA
....4	R2034	2007-000077	R-CHIP;470ohm,5%,1/10W,TP,1608	1	SA
....4	R2037	2007-000077	R-CHIP;470ohm,5%,1/10W,TP,1608	1	SA
....4	R2039	2007-000077	R-CHIP;470ohm,5%,1/10W,TP,1608	1	SA
....4	R2042	2007-000077	R-CHIP;470ohm,5%,1/10W,TP,1608	1	SA
....4	R2043	2007-000077	R-CHIP;470ohm,5%,1/10W,TP,1608	1	SA
....4	R2074	2007-000077	R-CHIP;470ohm,5%,1/10W,TP,1608	1	SA
....4	R2075	2007-000077	R-CHIP;470ohm,5%,1/10W,TP,1608	1	SA
....4	R2077	2007-000077	R-CHIP;470ohm,5%,1/10W,TP,1608	1	SA
....4	R2079	2007-000077	R-CHIP;470ohm,5%,1/10W,TP,1608	1	SA
....4	R3128	2007-000077	R-CHIP;470ohm,5%,1/10W,TP,1608	1	SA

ELECTRONIC SERVICE TIRGOVISTE

Level	Loc. No.	Code No.	Description & Specification	Q'ty	SA/SNA
....4	R3133	2007-000077	R-CHIP;470ohm,5%,1/10W,TP,1608	1	SA
....4	R4030	2007-000077	R-CHIP;470ohm,5%,1/10W,TP,1608	1	SA
....4	R4031	2007-000077	R-CHIP;470ohm,5%,1/10W,TP,1608	1	SA
....4	R4099	2007-000077	R-CHIP;470ohm,5%,1/10W,TP,1608	1	SA
....4	R5091	2007-000077	R-CHIP;470ohm,5%,1/10W,TP,1608	1	SA
....4	R5093	2007-000077	R-CHIP;470ohm,5%,1/10W,TP,1608	1	SA
....4	R1074	2007-000078	R-CHIP;1Kohm,5%,1/10W,TP,1608	1	SA
....4	R2009	2007-000078	R-CHIP;1Kohm,5%,1/10W,TP,1608	1	SA
....4	R2016	2007-000078	R-CHIP;1Kohm,5%,1/10W,TP,1608	1	SA
....4	R3001	2007-000078	R-CHIP;1Kohm,5%,1/10W,TP,1608	1	SA
....4	R3030	2007-000078	R-CHIP;1Kohm,5%,1/10W,TP,1608	1	SA
....4	R3121	2007-000078	R-CHIP;1Kohm,5%,1/10W,TP,1608	1	SA
....4	R3138	2007-000078	R-CHIP;1Kohm,5%,1/10W,TP,1608	1	SA
....4	R3139	2007-000078	R-CHIP;1Kohm,5%,1/10W,TP,1608	1	SA
....4	R4025	2007-000078	R-CHIP;1Kohm,5%,1/10W,TP,1608	1	SA
....4	R4026	2007-000078	R-CHIP;1Kohm,5%,1/10W,TP,1608	1	SA
....4	R4027	2007-000078	R-CHIP;1Kohm,5%,1/10W,TP,1608	1	SA
....4	R4034	2007-000078	R-CHIP;1Kohm,5%,1/10W,TP,1608	1	SA
....4	R4053	2007-000078	R-CHIP;1Kohm,5%,1/10W,TP,1608	1	SA
....4	R4096	2007-000078	R-CHIP;1Kohm,5%,1/10W,TP,1608	1	SA
....4	R4103	2007-000078	R-CHIP;1Kohm,5%,1/10W,TP,1608	1	SA
....4	R5043	2007-000078	R-CHIP;1Kohm,5%,1/10W,TP,1608	1	SA
....4	R3016	2007-000082	R-CHIP;3.3Kohm,5%,1/10W,TP,1608	1	SA
....4	R3017	2007-000082	R-CHIP;3.3Kohm,5%,1/10W,TP,1608	1	SA
....4	R3071	2007-000082	R-CHIP;3.3Kohm,5%,1/10W,TP,1608	1	SA
....4	R3072	2007-000082	R-CHIP;3.3Kohm,5%,1/10W,TP,1608	1	SA
....4	R4100	2007-000082	R-CHIP;3.3Kohm,5%,1/10W,TP,1608	1	SA
....4	R4101	2007-000082	R-CHIP;3.3Kohm,5%,1/10W,TP,1608	1	SA
....4	R1031	2007-000084	R-CHIP;4.7Kohm,5%,1/10W,TP,1608	1	SA
....4	R1035	2007-000084	R-CHIP;4.7Kohm,5%,1/10W,TP,1608	1	SA
....4	R1058	2007-000084	R-CHIP;4.7Kohm,5%,1/10W,TP,1608	1	SA
....4	R1060	2007-000084	R-CHIP;4.7Kohm,5%,1/10W,TP,1608	1	SA
....4	R1082	2007-000084	R-CHIP;4.7Kohm,5%,1/10W,TP,1608	1	SA
....4	R3002	2007-000084	R-CHIP;4.7Kohm,5%,1/10W,TP,1608	1	SA
....4	R3014	2007-000084	R-CHIP;4.7Kohm,5%,1/10W,TP,1608	1	SA
....4	R3015	2007-000084	R-CHIP;4.7Kohm,5%,1/10W,TP,1608	1	SA
....4	R3018	2007-000084	R-CHIP;4.7Kohm,5%,1/10W,TP,1608	1	SA
....4	R3020	2007-000084	R-CHIP;4.7Kohm,5%,1/10W,TP,1608	1	SA
....4	R3021	2007-000084	R-CHIP;4.7Kohm,5%,1/10W,TP,1608	1	SA
....4	R3022	2007-000084	R-CHIP;4.7Kohm,5%,1/10W,TP,1608	1	SA
....4	R3036	2007-000084	R-CHIP;4.7Kohm,5%,1/10W,TP,1608	1	SA
....4	R3038	2007-000084	R-CHIP;4.7Kohm,5%,1/10W,TP,1608	1	SA
....4	R3070	2007-000084	R-CHIP;4.7Kohm,5%,1/10W,TP,1608	1	SA
....4	R3079	2007-000084	R-CHIP;4.7Kohm,5%,1/10W,TP,1608	1	SA
....4	R3080	2007-000084	R-CHIP;4.7Kohm,5%,1/10W,TP,1608	1	SA
....4	R3081	2007-000084	R-CHIP;4.7Kohm,5%,1/10W,TP,1608	1	SA
....4	R3082	2007-000084	R-CHIP;4.7Kohm,5%,1/10W,TP,1608	1	SA
....4	R3086	2007-000084	R-CHIP;4.7Kohm,5%,1/10W,TP,1608	1	SA
....4	R3087	2007-000084	R-CHIP;4.7Kohm,5%,1/10W,TP,1608	1	SA
....4	R3108	2007-000084	R-CHIP;4.7Kohm,5%,1/10W,TP,1608	1	SA
....4	R3109	2007-000084	R-CHIP;4.7Kohm,5%,1/10W,TP,1608	1	SA
....4	R3110	2007-000084	R-CHIP;4.7Kohm,5%,1/10W,TP,1608	1	SA
....4	R3111	2007-000084	R-CHIP;4.7Kohm,5%,1/10W,TP,1608	1	SA
....4	R3112	2007-000084	R-CHIP;4.7Kohm,5%,1/10W,TP,1608	1	SA
....4	R3113	2007-000084	R-CHIP;4.7Kohm,5%,1/10W,TP,1608	1	SA
....4	R3114	2007-000084	R-CHIP;4.7Kohm,5%,1/10W,TP,1608	1	SA
....4	R3116	2007-000084	R-CHIP;4.7Kohm,5%,1/10W,TP,1608	1	SA
....4	R3129	2007-000084	R-CHIP;4.7Kohm,5%,1/10W,TP,1608	1	SA
....4	R3134	2007-000084	R-CHIP;4.7Kohm,5%,1/10W,TP,1608	1	SA
....4	R3137	2007-000084	R-CHIP;4.7Kohm,5%,1/10W,TP,1608	1	SA

ELECTRONIC SERVICE TARGOVISTE

Level	Loc. No.	Code No.	Description & Specification	Q'ty	SA/SNA
....4	R4036	2007-000084	R-CHIP;4.7Kohm,5%,1/10W,TP,1608	1	SA
....4	R4037	2007-000084	R-CHIP;4.7Kohm,5%,1/10W,TP,1608	1	SA
....4	R4098	2007-000084	R-CHIP;4.7Kohm,5%,1/10W,TP,1608	1	SA
....4	R4123	2007-000084	R-CHIP;4.7Kohm,5%,1/10W,TP,1608	1	SA
....4	R5064	2007-000084	R-CHIP;4.7Kohm,5%,1/10W,TP,1608	1	SA
....4	R5119	2007-000084	R-CHIP;4.7Kohm,5%,1/10W,TP,1608	1	SA
....4	R2028	2007-000087	R-CHIP;6.8Kohm,5%,1/10W,TP,1608	1	SA
....4	R2061	2007-000087	R-CHIP;6.8Kohm,5%,1/10W,TP,1608	1	SA
....4	R1015	2007-000090	R-CHIP;10Kohm,5%,1/10W,TP,1608	1	SA
....4	R1016	2007-000090	R-CHIP;10Kohm,5%,1/10W,TP,1608	1	SA
....4	R1038	2007-000090	R-CHIP;10Kohm,5%,1/10W,TP,1608	1	SA
....4	R1039	2007-000090	R-CHIP;10Kohm,5%,1/10W,TP,1608	1	SA
....4	R1041	2007-000090	R-CHIP;10Kohm,5%,1/10W,TP,1608	1	SA
....4	R1051	2007-000090	R-CHIP;10Kohm,5%,1/10W,TP,1608	1	SA
....4	R1067	2007-000090	R-CHIP;10Kohm,5%,1/10W,TP,1608	1	SA
....4	R1080	2007-000090	R-CHIP;10Kohm,5%,1/10W,TP,1608	1	SA
....4	R1101	2007-000090	R-CHIP;10Kohm,5%,1/10W,TP,1608	1	SA
....4	R1102	2007-000090	R-CHIP;10Kohm,5%,1/10W,TP,1608	1	SA
....4	R1103	2007-000090	R-CHIP;10Kohm,5%,1/10W,TP,1608	1	SA
....4	R1104	2007-000090	R-CHIP;10Kohm,5%,1/10W,TP,1608	1	SA
....4	R1105	2007-000090	R-CHIP;10Kohm,5%,1/10W,TP,1608	1	SA
....4	R2002	2007-000090	R-CHIP;10Kohm,5%,1/10W,TP,1608	1	SA
....4	R2003	2007-000090	R-CHIP;10Kohm,5%,1/10W,TP,1608	1	SA
....4	R2013	2007-000090	R-CHIP;10Kohm,5%,1/10W,TP,1608	1	SA
....4	R2044	2007-000090	R-CHIP;10Kohm,5%,1/10W,TP,1608	1	SA
....4	R2045	2007-000090	R-CHIP;10Kohm,5%,1/10W,TP,1608	1	SA
....4	R2057	2007-000090	R-CHIP;10Kohm,5%,1/10W,TP,1608	1	SA
....4	R2065	2007-000090	R-CHIP;10Kohm,5%,1/10W,TP,1608	1	SA
....4	R3005	2007-000090	R-CHIP;10Kohm,5%,1/10W,TP,1608	1	SA
....4	R3006	2007-000090	R-CHIP;10Kohm,5%,1/10W,TP,1608	1	SA
....4	R3007	2007-000090	R-CHIP;10Kohm,5%,1/10W,TP,1608	1	SA
....4	R3075	2007-000090	R-CHIP;10Kohm,5%,1/10W,TP,1608	1	SA
....4	R3076	2007-000090	R-CHIP;10Kohm,5%,1/10W,TP,1608	1	SA
....4	R3083	2007-000090	R-CHIP;10Kohm,5%,1/10W,TP,1608	1	SA
....4	R3084	2007-000090	R-CHIP;10Kohm,5%,1/10W,TP,1608	1	SA
....4	R3085	2007-000090	R-CHIP;10Kohm,5%,1/10W,TP,1608	1	SA
....4	R3131	2007-000090	R-CHIP;10Kohm,5%,1/10W,TP,1608	1	SA
....4	R3140	2007-000090	R-CHIP;10Kohm,5%,1/10W,TP,1608	1	SA
....4	R4118	2007-000090	R-CHIP;10Kohm,5%,1/10W,TP,1608	1	SA
....4	R4119	2007-000090	R-CHIP;10Kohm,5%,1/10W,TP,1608	1	SA
....4	R5004	2007-000090	R-CHIP;10Kohm,5%,1/10W,TP,1608	1	SA
....4	R5044	2007-000090	R-CHIP;10Kohm,5%,1/10W,TP,1608	1	SA
....4	R1070	2007-000093	R-CHIP;20Kohm,5%,1/10W,TP,1608	1	SA
....4	R1071	2007-000093	R-CHIP;20Kohm,5%,1/10W,TP,1608	1	SA
....4	R3004	2007-000094	R-CHIP;22Kohm,5%,1/10W,TP,1608	1	SA
....4	R1062	2007-000097	R-CHIP;47Kohm,5%,1/10W,TP,1608	1	SA
....4	R1068	2007-000097	R-CHIP;47Kohm,5%,1/10W,TP,1608	1	SA
....4	R1075	2007-000097	R-CHIP;47Kohm,5%,1/10W,TP,1608	1	SA
....4	R1079	2007-000097	R-CHIP;47Kohm,5%,1/10W,TP,1608	1	SA
....4	R2010	2007-000097	R-CHIP;47Kohm,5%,1/10W,TP,1608	1	SA
....4	R2011	2007-000097	R-CHIP;47Kohm,5%,1/10W,TP,1608	1	SA
....4	R2012	2007-000097	R-CHIP;47Kohm,5%,1/10W,TP,1608	1	SA
....4	R3099	2007-000097	R-CHIP;47Kohm,5%,1/10W,TP,1608	1	SA
....4	R1001	2007-000100	R-CHIP;68Kohm,5%,1/10W,TP,1608	1	SA
....4	R1002	2007-000100	R-CHIP;68Kohm,5%,1/10W,TP,1608	1	SA
....4	R1003	2007-000100	R-CHIP;68Kohm,5%,1/10W,TP,1608	1	SA
....4	R1004	2007-000100	R-CHIP;68Kohm,5%,1/10W,TP,1608	1	SA
....4	R1005	2007-000100	R-CHIP;68Kohm,5%,1/10W,TP,1608	1	SA
....4	R1006	2007-000100	R-CHIP;68Kohm,5%,1/10W,TP,1608	1	SA
....4	R1007	2007-000100	R-CHIP;68Kohm,5%,1/10W,TP,1608	1	SA

ELECTRONIC SERVICE TIRGOVISTE

Level	Loc. No.	Code No.	Description & Specification	Q'ty	SA/SNA
....4	R1008	2007-000100	R-CHIP;68Kohm,5%,1/10W,TP,1608	1	SA
....4	R1019	2007-000100	R-CHIP;68Kohm,5%,1/10W,TP,1608	1	SA
....4	R1020	2007-000100	R-CHIP;68Kohm,5%,1/10W,TP,1608	1	SA
....4	R1021	2007-000100	R-CHIP;68Kohm,5%,1/10W,TP,1608	1	SA
....4	R1022	2007-000100	R-CHIP;68Kohm,5%,1/10W,TP,1608	1	SA
....4	R1023	2007-000100	R-CHIP;68Kohm,5%,1/10W,TP,1608	1	SA
....4	R1024	2007-000100	R-CHIP;68Kohm,5%,1/10W,TP,1608	1	SA
....4	R1025	2007-000100	R-CHIP;68Kohm,5%,1/10W,TP,1608	1	SA
....4	R1026	2007-000100	R-CHIP;68Kohm,5%,1/10W,TP,1608	1	SA
....4	R1027	2007-000100	R-CHIP;68Kohm,5%,1/10W,TP,1608	1	SA
....4	R1028	2007-000100	R-CHIP;68Kohm,5%,1/10W,TP,1608	1	SA
....4	R1029	2007-000100	R-CHIP;68Kohm,5%,1/10W,TP,1608	1	SA
....4	R1030	2007-000100	R-CHIP;68Kohm,5%,1/10W,TP,1608	1	SA
....4	R1043	2007-000100	R-CHIP;68Kohm,5%,1/10W,TP,1608	1	SA
....4	R1044	2007-000100	R-CHIP;68Kohm,5%,1/10W,TP,1608	1	SA
....4	R1045	2007-000100	R-CHIP;68Kohm,5%,1/10W,TP,1608	1	SA
....4	R1046	2007-000100	R-CHIP;68Kohm,5%,1/10W,TP,1608	1	SA
....4	R1034	2007-000102	R-CHIP;100Kohm,5%,1/10W,TP,1608	1	SA
....4	R1064	2007-000102	R-CHIP;100Kohm,5%,1/10W,TP,1608	1	SA
....4	R1065	2007-000102	R-CHIP;100Kohm,5%,1/10W,TP,1608	1	SA
....4	R1069	2007-000102	R-CHIP;100Kohm,5%,1/10W,TP,1608	1	SA
....4	R1072	2007-000102	R-CHIP;100Kohm,5%,1/10W,TP,1608	1	SA
....4	R1073	2007-000107	R-CHIP;470Kohm,5%,1/10W,TP,1608	1	SA
....4	R4021	2007-000113	R-CHIP;33ohm,5%,1/10W,TP,1608	1	SA
....4	R4022	2007-000113	R-CHIP;33ohm,5%,1/10W,TP,1608	1	SA
....4	R4023	2007-000113	R-CHIP;33ohm,5%,1/10W,TP,1608	1	SA
....4	R4024	2007-000113	R-CHIP;33ohm,5%,1/10W,TP,1608	1	SA
....4	R1036	2007-000119	R-CHIP;560ohm,5%,1/10W,TP,1608	1	SA
....4	R1078	2007-000122	R-CHIP;1.2Kohm,5%,1/10W,TP,1608	1	SA
....4	R5053	2007-000123	R-CHIP;1.5Kohm,5%,1/10W,TP,1608	1	SA
....4	R5054	2007-000123	R-CHIP;1.5Kohm,5%,1/10W,TP,1608	1	SA
....4	R5055	2007-000123	R-CHIP;1.5Kohm,5%,1/10W,TP,1608	1	SA
....4	R1096	2007-000125	R-CHIP;3.9Kohm,5%,1/10W,TP,1608	1	SA
....4	R1076	2007-000129	R-CHIP;27Kohm,5%,1/10W,TP,1608	1	SA
....4	R5015	2007-000133	R-CHIP;330Kohm,5%,1/10W,TP,1608	1	SA
....4	R2098	2007-000309	R-CHIP;10ohm,5%,1/10W,TP,1608	1	SA
....4	R2099	2007-000309	R-CHIP;10ohm,5%,1/10W,TP,1608	1	SA
....4	R2100	2007-000309	R-CHIP;10ohm,5%,1/10W,TP,1608	1	SA
....4	R2101	2007-000309	R-CHIP;10ohm,5%,1/10W,TP,1608	1	SA
....4	R2102	2007-000309	R-CHIP;10ohm,5%,1/10W,TP,1608	1	SA
....4	R2103	2007-000309	R-CHIP;10ohm,5%,1/10W,TP,1608	1	SA
....4	R2104	2007-000309	R-CHIP;10ohm,5%,1/10W,TP,1608	1	SA
....4	R2105	2007-000309	R-CHIP;10ohm,5%,1/10W,TP,1608	1	SA
....4	R3044	2007-000309	R-CHIP;10ohm,5%,1/10W,TP,1608	1	SA
....4	R3048	2007-000309	R-CHIP;10ohm,5%,1/10W,TP,1608	1	SA
....4	R3049_1M	2007-000309	R-CHIP;10ohm,5%,1/10W,TP,1608	1	SA
....4	R3050_1M	2007-000309	R-CHIP;10ohm,5%,1/10W,TP,1608	1	SA
....4	R3056	2007-000309	R-CHIP;10ohm,5%,1/10W,TP,1608	1	SA
....4	R3060	2007-000309	R-CHIP;10ohm,5%,1/10W,TP,1608	1	SA
....4	R3061	2007-000309	R-CHIP;10ohm,5%,1/10W,TP,1608	1	SA
....4	R3064	2007-000309	R-CHIP;10ohm,5%,1/10W,TP,1608	1	SA
....4	R3066	2007-000309	R-CHIP;10ohm,5%,1/10W,TP,1608	1	SA
....4	R3067	2007-000309	R-CHIP;10ohm,5%,1/10W,TP,1608	1	SA
....4	R3068	2007-000309	R-CHIP;10ohm,5%,1/10W,TP,1608	1	SA
....4	R3069	2007-000309	R-CHIP;10ohm,5%,1/10W,TP,1608	1	SA
....4	R3091	2007-000309	R-CHIP;10ohm,5%,1/10W,TP,1608	1	SA
....4	R3092	2007-000309	R-CHIP;10ohm,5%,1/10W,TP,1608	1	SA
....4	R3093	2007-000309	R-CHIP;10ohm,5%,1/10W,TP,1608	1	SA
....4	R3094	2007-000309	R-CHIP;10ohm,5%,1/10W,TP,1608	1	SA
....4	R3095	2007-000309	R-CHIP;10ohm,5%,1/10W,TP,1608	1	SA

ELECTRONIC SERVICE TIRGOVISTE

Level	Loc. No.	Code No.	Description & Specification	Q'ty	SA/SNA
....4	R3096	2007-000309	R-CHIP;10ohm,5%,1/10W,TP,1608	1	SA
....4	R3097	2007-000309	R-CHIP;10ohm,5%,1/10W,TP,1608	1	SA
....4	R3098	2007-000309	R-CHIP;10ohm,5%,1/10W,TP,1608	1	SA
....4	R5045	2007-000309	R-CHIP;10ohm,5%,1/10W,TP,1608	1	SA
....4	R5046	2007-000309	R-CHIP;10ohm,5%,1/10W,TP,1608	1	SA
....4	R5047	2007-000309	R-CHIP;10ohm,5%,1/10W,TP,1608	1	SA
....4	R2017	2007-000458	R-CHIP;18Kohm,5%,1/10W,TP,1608	1	SA
....4	R2052	2007-000458	R-CHIP;18Kohm,5%,1/10W,TP,1608	1	SA
....4	R3012	2007-000704	R-CHIP;3.6Kohm,5%,1/10W,TP,1608	1	SA
....4	R3013	2007-000704	R-CHIP;3.6Kohm,5%,1/10W,TP,1608	1	SA
....4	R1077	2007-000708	R-CHIP;3.9Kohm,1%,1/10W,TP,1608	1	SA
....4	R2019	2007-000950	R-CHIP;47ohm,5%,1/4W,TP,3216	1	SA
....4	R2020	2007-000950	R-CHIP;47ohm,5%,1/4W,TP,3216	1	SA
....4	R2021	2007-000950	R-CHIP;47ohm,5%,1/4W,TP,3216	1	SA
....4	R2066	2007-000950	R-CHIP;47ohm,5%,1/4W,TP,3216	1	SA
....4	R2067	2007-000950	R-CHIP;47ohm,5%,1/4W,TP,3216	1	SA
....4	R2076	2007-000950	R-CHIP;47ohm,5%,1/4W,TP,3216	1	SA
....4	R2078	2007-000950	R-CHIP;47ohm,5%,1/4W,TP,3216	1	SA
....4	R2082	2007-000950	R-CHIP;47ohm,5%,1/4W,TP,3216	1	SA
....4	R2083	2007-000950	R-CHIP;47ohm,5%,1/4W,TP,3216	1	SA
....4	R2094	2007-000950	R-CHIP;47ohm,5%,1/4W,TP,3216	1	SA
....4	R2095	2007-000950	R-CHIP;47ohm,5%,1/4W,TP,3216	1	SA
....4	R5035	2007-001014	R-CHIP;51OHM,5%,1/10W,TP,1608	1	SA
....4	R5039	2007-001014	R-CHIP;51OHM,5%,1/10W,TP,1608	1	SA
....4	R2014	2007-001164	R-CHIP;75ohm,1%,1/10W,TP,1608	1	SA
....4	R2015	2007-001164	R-CHIP;75ohm,1%,1/10W,TP,1608	1	SA
....4	R2025	2007-001164	R-CHIP;75ohm,1%,1/10W,TP,1608	1	SA
....4	R2026	2007-001164	R-CHIP;75ohm,1%,1/10W,TP,1608	1	SA
....4	R2027	2007-001164	R-CHIP;75ohm,1%,1/10W,TP,1608	1	SA
....4	R2032	2007-001164	R-CHIP;75ohm,1%,1/10W,TP,1608	1	SA
....4	R2062	2007-001164	R-CHIP;75ohm,1%,1/10W,TP,1608	1	SA
....4	R2085	2007-001164	R-CHIP;75ohm,1%,1/10W,TP,1608	1	SA
....4	R2086	2007-001164	R-CHIP;75ohm,1%,1/10W,TP,1608	1	SA
....4	R2087	2007-001164	R-CHIP;75ohm,1%,1/10W,TP,1608	1	SA
....4	R2036	2007-001167	R-CHIP;75ohm,5%,1/10W,TP,1608	1	SA
....4	R2038	2007-001167	R-CHIP;75ohm,5%,1/10W,TP,1608	1	SA
....4	R2041	2007-001167	R-CHIP;75ohm,5%,1/10W,TP,1608	1	SA
....4	R2046	2007-001167	R-CHIP;75ohm,5%,1/10W,TP,1608	1	SA
....4	R2047	2007-001167	R-CHIP;75ohm,5%,1/10W,TP,1608	1	SA
....4	R2048	2007-001167	R-CHIP;75ohm,5%,1/10W,TP,1608	1	SA
....4	R2054	2007-001167	R-CHIP;75ohm,5%,1/10W,TP,1608	1	SA
....4	R2059	2007-001167	R-CHIP;75ohm,5%,1/10W,TP,1608	1	SA
....4	R5016	2007-001167	R-CHIP;75ohm,5%,1/10W,TP,1608	1	SA
....4	R1083	2007-008720	R-CHIP;4.7ohm,1%,1/4W,TP,3216	1	SA
....4	R1088	2007-008720	R-CHIP;4.7ohm,1%,1/4W,TP,3216	1	SA
....4	R1094	2007-008720	R-CHIP;4.7ohm,1%,1/4W,TP,3216	1	SA
....4	R1097	2007-008720	R-CHIP;4.7ohm,1%,1/4W,TP,3216	1	SA
....4	RA5001	2011-000585	R-NET;47ohm,5%,1/16W,L,CHIP,8P,TP,3.2x1.	1	SA
....4	RA5002	2011-000585	R-NET;47ohm,5%,1/16W,L,CHIP,8P,TP,3.2x1.	1	SA
....4	RA5003	2011-000585	R-NET;47ohm,5%,1/16W,L,CHIP,8P,TP,3.2x1.	1	SA
....4	RA5004	2011-000585	R-NET;47ohm,5%,1/16W,L,CHIP,8P,TP,3.2x1.	1	SA
....4	RA5005	2011-000585	R-NET;47ohm,5%,1/16W,L,CHIP,8P,TP,3.2x1.	1	SA
....4	RA5006	2011-000585	R-NET;47ohm,5%,1/16W,L,CHIP,8P,TP,3.2x1.	1	SA
....4	RA5007	2011-000585	R-NET;47ohm,5%,1/16W,L,CHIP,8P,TP,3.2x1.	1	SA
....4	RA5010	2011-000585	R-NET;47ohm,5%,1/16W,L,CHIP,8P,TP,3.2x1.	1	SA
....4	RA3004	2011-000651	R-NET;10ohm,5%,1/16W,L,CHIP,8P,TP,3216	1	SA
....4	RA3005	2011-000651	R-NET;10ohm,5%,1/16W,L,CHIP,8P,TP,3216	1	SA
....4	RA3007	2011-000651	R-NET;10ohm,5%,1/16W,L,CHIP,8P,TP,3216	1	SA
....4	RA3008	2011-000651	R-NET;10ohm,5%,1/16W,L,CHIP,8P,TP,3216	1	SA
....4	RA3009	2011-000651	R-NET;10ohm,5%,1/16W,L,CHIP,8P,TP,3216	1	SA

ELECTRONIC SERVICE TIRGOVISTE

Level	Loc. No.	Code No.	Description & Specification	Q'ty	SA/SNA
....4	RA3011	2011-000651	R-NET;10ohm,5%,1/16W,L,CHIP,8P,TP,3216	1	SA
....4	RA3001	2011-001093	R-NET;100OHM,5%,1/16W,L,CHIP,8P,TP,3216	1	SA
....4	RA3002	2011-001093	R-NET;100OHM,5%,1/16W,L,CHIP,8P,TP,3216	1	SA
....4	RA3003	2011-001093	R-NET;100OHM,5%,1/16W,L,CHIP,8P,TP,3216	1	SA
....4	RA3006	2011-001093	R-NET;100OHM,5%,1/16W,L,CHIP,8P,TP,3216	1	SA
....4	RA3010	2011-001093	R-NET;100OHM,5%,1/16W,L,CHIP,8P,TP,3216	1	SA
....4	RA3012	2011-001093	R-NET;100OHM,5%,1/16W,L,CHIP,8P,TP,3216	1	SA
....4	RA3013	2011-001093	R-NET;100OHM,5%,1/16W,L,CHIP,8P,TP,3216	1	SA
....4	RA3014	2011-001093	R-NET;100OHM,5%,1/16W,L,CHIP,8P,TP,3216	1	SA
....4	RA3015	2011-001093	R-NET;100OHM,5%,1/16W,L,CHIP,8P,TP,3216	1	SA
....4	RA3016	2011-001093	R-NET;100OHM,5%,1/16W,L,CHIP,8P,TP,3216	1	SA
....4	RA3017	2011-001093	R-NET;100OHM,5%,1/16W,L,CHIP,8P,TP,3216	1	SA
....4	RA3018	2011-001093	R-NET;100OHM,5%,1/16W,L,CHIP,8P,TP,3216	1	SA
....4	RA3019	2011-001093	R-NET;100OHM,5%,1/16W,L,CHIP,8P,TP,3216	1	SA
....4	RA3020	2011-001093	R-NET;100OHM,5%,1/16W,L,CHIP,8P,TP,3216	1	SA
....4	RA4001	2011-001093	R-NET;100OHM,5%,1/16W,L,CHIP,8P,TP,3216	1	SA
....4	RA4002	2011-001093	R-NET;100OHM,5%,1/16W,L,CHIP,8P,TP,3216	1	SA
....4	C1158	2203-000125	C-CER,CHIP;1.2nF,10%,50V,X7R,TP,1608,-	1	SA
....4	C1037	2203-000140	C-CER,CHIP;1.5nF,10%,50V,X7R,1608	1	SA
....4	C1062	2203-000140	C-CER,CHIP;1.5nF,10%,50V,X7R,1608	1	SA
....4	C1004	2203-000189	C-CER,CHIP;100nF,+80-20%,25V,Y5V,1608	1	SA
....4	C1006	2203-000189	C-CER,CHIP;100nF,+80-20%,25V,Y5V,1608	1	SA
....4	C1008	2203-000189	C-CER,CHIP;100nF,+80-20%,25V,Y5V,1608	1	SA
....4	C1016	2203-000189	C-CER,CHIP;100nF,+80-20%,25V,Y5V,1608	1	SA
....4	C1021	2203-000189	C-CER,CHIP;100nF,+80-20%,25V,Y5V,1608	1	SA
....4	C1025	2203-000189	C-CER,CHIP;100nF,+80-20%,25V,Y5V,1608	1	SA
....4	C1027	2203-000189	C-CER,CHIP;100nF,+80-20%,25V,Y5V,1608	1	SA
....4	C1043	2203-000189	C-CER,CHIP;100nF,+80-20%,25V,Y5V,1608	1	SA
....4	C1046	2203-000189	C-CER,CHIP;100nF,+80-20%,25V,Y5V,1608	1	SA
....4	C1052	2203-000189	C-CER,CHIP;100nF,+80-20%,25V,Y5V,1608	1	SA
....4	C1053	2203-000189	C-CER,CHIP;100nF,+80-20%,25V,Y5V,1608	1	SA
....4	C1054	2203-000189	C-CER,CHIP;100nF,+80-20%,25V,Y5V,1608	1	SA
....4	C1055	2203-000189	C-CER,CHIP;100nF,+80-20%,25V,Y5V,1608	1	SA
....4	C1075	2203-000189	C-CER,CHIP;100nF,+80-20%,25V,Y5V,1608	1	SA
....4	C1084	2203-000189	C-CER,CHIP;100nF,+80-20%,25V,Y5V,1608	1	SA
....4	C1086	2203-000189	C-CER,CHIP;100nF,+80-20%,25V,Y5V,1608	1	SA
....4	C1087	2203-000189	C-CER,CHIP;100nF,+80-20%,25V,Y5V,1608	1	SA
....4	C1097	2203-000189	C-CER,CHIP;100nF,+80-20%,25V,Y5V,1608	1	SA
....4	C1098	2203-000189	C-CER,CHIP;100nF,+80-20%,25V,Y5V,1608	1	SA
....4	C1103	2203-000189	C-CER,CHIP;100nF,+80-20%,25V,Y5V,1608	1	SA
....4	C1105	2203-000189	C-CER,CHIP;100nF,+80-20%,25V,Y5V,1608	1	SA
....4	C1109	2203-000189	C-CER,CHIP;100nF,+80-20%,25V,Y5V,1608	1	SA
....4	C1124	2203-000189	C-CER,CHIP;100nF,+80-20%,25V,Y5V,1608	1	SA
....4	C1132	2203-000189	C-CER,CHIP;100nF,+80-20%,25V,Y5V,1608	1	SA
....4	C1133	2203-000189	C-CER,CHIP;100nF,+80-20%,25V,Y5V,1608	1	SA
....4	C1141	2203-000189	C-CER,CHIP;100nF,+80-20%,25V,Y5V,1608	1	SA
....4	C1159	2203-000189	C-CER,CHIP;100nF,+80-20%,25V,Y5V,1608	1	SA
....4	C1168	2203-000189	C-CER,CHIP;100nF,+80-20%,25V,Y5V,1608	1	SA
....4	C2002	2203-000189	C-CER,CHIP;100nF,+80-20%,25V,Y5V,1608	1	SA
....4	C2018	2203-000189	C-CER,CHIP;100nF,+80-20%,25V,Y5V,1608	1	SA
....4	C3001	2203-000189	C-CER,CHIP;100nF,+80-20%,25V,Y5V,1608	1	SA
....4	C3005	2203-000189	C-CER,CHIP;100nF,+80-20%,25V,Y5V,1608	1	SA
....4	C3034	2203-000189	C-CER,CHIP;100nF,+80-20%,25V,Y5V,1608	1	SA
....4	C4016	2203-000189	C-CER,CHIP;100nF,+80-20%,25V,Y5V,1608	1	SA
....4	C4017	2203-000189	C-CER,CHIP;100nF,+80-20%,25V,Y5V,1608	1	SA
....4	C4018	2203-000189	C-CER,CHIP;100nF,+80-20%,25V,Y5V,1608	1	SA
....4	C4019	2203-000189	C-CER,CHIP;100nF,+80-20%,25V,Y5V,1608	1	SA
....4	C4020	2203-000189	C-CER,CHIP;100nF,+80-20%,25V,Y5V,1608	1	SA
....4	C4021	2203-000189	C-CER,CHIP;100nF,+80-20%,25V,Y5V,1608	1	SA
....4	C4022	2203-000189	C-CER,CHIP;100nF,+80-20%,25V,Y5V,1608	1	SA

ELECTRONIC SERVICE TIRGOVISTE

Level	Loc. No.	Code No.	Description & Specification	Q'ty	SA/SNA
....4	C4025	2203-000189	C-CER,CHIP;100nF,+80-20%,25V,Y5V,1608	1	SA
....4	C4026	2203-000189	C-CER,CHIP;100nF,+80-20%,25V,Y5V,1608	1	SA
....4	C4027	2203-000189	C-CER,CHIP;100nF,+80-20%,25V,Y5V,1608	1	SA
....4	C4028	2203-000189	C-CER,CHIP;100nF,+80-20%,25V,Y5V,1608	1	SA
....4	C4029	2203-000189	C-CER,CHIP;100nF,+80-20%,25V,Y5V,1608	1	SA
....4	C4031	2203-000189	C-CER,CHIP;100nF,+80-20%,25V,Y5V,1608	1	SA
....4	C4032	2203-000189	C-CER,CHIP;100nF,+80-20%,25V,Y5V,1608	1	SA
....4	C4034	2203-000189	C-CER,CHIP;100nF,+80-20%,25V,Y5V,1608	1	SA
....4	C4035	2203-000189	C-CER,CHIP;100nF,+80-20%,25V,Y5V,1608	1	SA
....4	C4036	2203-000189	C-CER,CHIP;100nF,+80-20%,25V,Y5V,1608	1	SA
....4	C4038	2203-000189	C-CER,CHIP;100nF,+80-20%,25V,Y5V,1608	1	SA
....4	C4039	2203-000189	C-CER,CHIP;100nF,+80-20%,25V,Y5V,1608	1	SA
....4	C4040	2203-000189	C-CER,CHIP;100nF,+80-20%,25V,Y5V,1608	1	SA
....4	C4041	2203-000189	C-CER,CHIP;100nF,+80-20%,25V,Y5V,1608	1	SA
....4	C4042	2203-000189	C-CER,CHIP;100nF,+80-20%,25V,Y5V,1608	1	SA
....4	C4043	2203-000189	C-CER,CHIP;100nF,+80-20%,25V,Y5V,1608	1	SA
....4	C4045	2203-000189	C-CER,CHIP;100nF,+80-20%,25V,Y5V,1608	1	SA
....4	C4046	2203-000189	C-CER,CHIP;100nF,+80-20%,25V,Y5V,1608	1	SA
....4	C4048	2203-000189	C-CER,CHIP;100nF,+80-20%,25V,Y5V,1608	1	SA
....4	C4049	2203-000189	C-CER,CHIP;100nF,+80-20%,25V,Y5V,1608	1	SA
....4	C4052	2203-000189	C-CER,CHIP;100nF,+80-20%,25V,Y5V,1608	1	SA
....4	C4053	2203-000189	C-CER,CHIP;100nF,+80-20%,25V,Y5V,1608	1	SA
....4	C4054	2203-000189	C-CER,CHIP;100nF,+80-20%,25V,Y5V,1608	1	SA
....4	C4055	2203-000189	C-CER,CHIP;100nF,+80-20%,25V,Y5V,1608	1	SA
....4	C4056	2203-000189	C-CER,CHIP;100nF,+80-20%,25V,Y5V,1608	1	SA
....4	C4059	2203-000189	C-CER,CHIP;100nF,+80-20%,25V,Y5V,1608	1	SA
....4	C4060	2203-000189	C-CER,CHIP;100nF,+80-20%,25V,Y5V,1608	1	SA
....4	C4061	2203-000189	C-CER,CHIP;100nF,+80-20%,25V,Y5V,1608	1	SA
....4	C4062	2203-000189	C-CER,CHIP;100nF,+80-20%,25V,Y5V,1608	1	SA
....4	C4063	2203-000189	C-CER,CHIP;100nF,+80-20%,25V,Y5V,1608	1	SA
....4	C4067	2203-000189	C-CER,CHIP;100nF,+80-20%,25V,Y5V,1608	1	SA
....4	C4068	2203-000189	C-CER,CHIP;100nF,+80-20%,25V,Y5V,1608	1	SA
....4	C4069	2203-000189	C-CER,CHIP;100nF,+80-20%,25V,Y5V,1608	1	SA
....4	C4070	2203-000189	C-CER,CHIP;100nF,+80-20%,25V,Y5V,1608	1	SA
....4	C4071	2203-000189	C-CER,CHIP;100nF,+80-20%,25V,Y5V,1608	1	SA
....4	C4073	2203-000189	C-CER,CHIP;100nF,+80-20%,25V,Y5V,1608	1	SA
....4	C4076	2203-000189	C-CER,CHIP;100nF,+80-20%,25V,Y5V,1608	1	SA
....4	C4077	2203-000189	C-CER,CHIP;100nF,+80-20%,25V,Y5V,1608	1	SA
....4	C4080	2203-000189	C-CER,CHIP;100nF,+80-20%,25V,Y5V,1608	1	SA
....4	C4081	2203-000189	C-CER,CHIP;100nF,+80-20%,25V,Y5V,1608	1	SA
....4	C4083	2203-000189	C-CER,CHIP;100nF,+80-20%,25V,Y5V,1608	1	SA
....4	C4084	2203-000189	C-CER,CHIP;100nF,+80-20%,25V,Y5V,1608	1	SA
....4	C4085	2203-000189	C-CER,CHIP;100nF,+80-20%,25V,Y5V,1608	1	SA
....4	C4086	2203-000189	C-CER,CHIP;100nF,+80-20%,25V,Y5V,1608	1	SA
....4	C4095	2203-000189	C-CER,CHIP;100nF,+80-20%,25V,Y5V,1608	1	SA
....4	C4128	2203-000189	C-CER,CHIP;100nF,+80-20%,25V,Y5V,1608	1	SA
....4	C5026	2203-000189	C-CER,CHIP;100nF,+80-20%,25V,Y5V,1608	1	SA
....4	C5038	2203-000189	C-CER,CHIP;100nF,+80-20%,25V,Y5V,1608	1	SA
....4	C5043	2203-000189	C-CER,CHIP;100nF,+80-20%,25V,Y5V,1608	1	SA
....4	C5022	2203-000221	C-CER,CHIP;100nF,20%,50V,Y5V,TP,3216	1	SA
....4	C1050	2203-000236	C-CER,CHIP;0.1nF,5%,50V,C0G,1608	1	SA
....4	C1134	2203-000236	C-CER,CHIP;0.1nF,5%,50V,C0G,1608	1	SA
....4	C1135	2203-000236	C-CER,CHIP;0.1nF,5%,50V,C0G,1608	1	SA
....4	C1161	2203-000236	C-CER,CHIP;0.1nF,5%,50V,C0G,1608	1	SA
....4	C1162	2203-000236	C-CER,CHIP;0.1nF,5%,50V,C0G,1608	1	SA
....4	C1163	2203-000236	C-CER,CHIP;0.1nF,5%,50V,C0G,1608	1	SA
....4	C2003	2203-000236	C-CER,CHIP;0.1nF,5%,50V,C0G,1608	1	SA
....4	C2004	2203-000236	C-CER,CHIP;0.1nF,5%,50V,C0G,1608	1	SA
....4	C2005	2203-000236	C-CER,CHIP;0.1nF,5%,50V,C0G,1608	1	SA
....4	C2006	2203-000236	C-CER,CHIP;0.1nF,5%,50V,C0G,1608	1	SA

ELECTRONIC SERVICE TIRGOVISTE

Level	Loc. No.	Code No.	Description & Specification	Q'ty	SA/SNA
....4	C2007	2203-000236	C-CER,CHIP;0.1nF,5%,50V,C0G,1608	1	SA
....4	C2011	2203-000236	C-CER,CHIP;0.1nF,5%,50V,C0G,1608	1	SA
....4	C2012	2203-000236	C-CER,CHIP;0.1nF,5%,50V,C0G,1608	1	SA
....4	C2013	2203-000236	C-CER,CHIP;0.1nF,5%,50V,C0G,1608	1	SA
....4	C2014	2203-000236	C-CER,CHIP;0.1nF,5%,50V,C0G,1608	1	SA
....4	C2019	2203-000236	C-CER,CHIP;0.1nF,5%,50V,C0G,1608	1	SA
....4	C2020	2203-000236	C-CER,CHIP;0.1nF,5%,50V,C0G,1608	1	SA
....4	C2022_DE	2203-000236	C-CER,CHIP;0.1nF,5%,50V,C0G,1608	1	SA
....4	C2023	2203-000236	C-CER,CHIP;0.1nF,5%,50V,C0G,1608	1	SA
....4	C2024	2203-000236	C-CER,CHIP;0.1nF,5%,50V,C0G,1608	1	SA
....4	C2025	2203-000236	C-CER,CHIP;0.1nF,5%,50V,C0G,1608	1	SA
....4	C2027	2203-000236	C-CER,CHIP;0.1nF,5%,50V,C0G,1608	1	SA
....4	C2028	2203-000236	C-CER,CHIP;0.1nF,5%,50V,C0G,1608	1	SA
....4	C2032_26	2203-000236	C-CER,CHIP;0.1nF,5%,50V,C0G,1608	1	SA
....4	C3024	2203-000236	C-CER,CHIP;0.1nF,5%,50V,C0G,1608	1	SA
....4	C3025	2203-000236	C-CER,CHIP;0.1nF,5%,50V,C0G,1608	1	SA
....4	C5059	2203-000236	C-CER,CHIP;0.1nF,5%,50V,C0G,1608	1	SA
....4	C5068	2203-000236	C-CER,CHIP;0.1nF,5%,50V,C0G,1608	1	SA
....4	C5069	2203-000236	C-CER,CHIP;0.1nF,5%,50V,C0G,1608	1	SA
....4	C5084	2203-000236	C-CER,CHIP;0.1nF,5%,50V,C0G,1608	1	SA
....4	C5085	2203-000236	C-CER,CHIP;0.1nF,5%,50V,C0G,1608	1	SA
....4	C1002	2203-000257	C-CER,CHIP;10nF,10%,50V,X7R,1608	1	SA
....4	C1005	2203-000257	C-CER,CHIP;10nF,10%,50V,X7R,1608	1	SA
....4	C1013	2203-000257	C-CER,CHIP;10nF,10%,50V,X7R,1608	1	SA
....4	C1022	2203-000257	C-CER,CHIP;10nF,10%,50V,X7R,1608	1	SA
....4	C1026	2203-000257	C-CER,CHIP;10nF,10%,50V,X7R,1608	1	SA
....4	C1034	2203-000257	C-CER,CHIP;10nF,10%,50V,X7R,1608	1	SA
....4	C1049	2203-000257	C-CER,CHIP;10nF,10%,50V,X7R,1608	1	SA
....4	C1094	2203-000257	C-CER,CHIP;10nF,10%,50V,X7R,1608	1	SA
....4	C3035	2203-000257	C-CER,CHIP;10nF,10%,50V,X7R,1608	1	SA
....4	C4005	2203-000257	C-CER,CHIP;10nF,10%,50V,X7R,1608	1	SA
....4	C4006	2203-000257	C-CER,CHIP;10nF,10%,50V,X7R,1608	1	SA
....4	C4007	2203-000257	C-CER,CHIP;10nF,10%,50V,X7R,1608	1	SA
....4	C4008	2203-000257	C-CER,CHIP;10nF,10%,50V,X7R,1608	1	SA
....4	C4009	2203-000257	C-CER,CHIP;10nF,10%,50V,X7R,1608	1	SA
....4	C4124	2203-000257	C-CER,CHIP;10nF,10%,50V,X7R,1608	1	SA
....4	C5006	2203-000257	C-CER,CHIP;10nF,10%,50V,X7R,1608	1	SA
....4	C5007	2203-000257	C-CER,CHIP;10nF,10%,50V,X7R,1608	1	SA
....4	C5008	2203-000257	C-CER,CHIP;10nF,10%,50V,X7R,1608	1	SA
....4	C5009	2203-000257	C-CER,CHIP;10nF,10%,50V,X7R,1608	1	SA
....4	C5010	2203-000257	C-CER,CHIP;10nF,10%,50V,X7R,1608	1	SA
....4	C5017	2203-000257	C-CER,CHIP;10nF,10%,50V,X7R,1608	1	SA
....4	C5036	2203-000257	C-CER,CHIP;10nF,10%,50V,X7R,1608	1	SA
....4	C5040	2203-000257	C-CER,CHIP;10nF,10%,50V,X7R,1608	1	SA
....4	C5061	2203-000257	C-CER,CHIP;10nF,10%,50V,X7R,1608	1	SA
....4	C5062	2203-000257	C-CER,CHIP;10nF,10%,50V,X7R,1608	1	SA
....4	C5064	2203-000257	C-CER,CHIP;10nF,10%,50V,X7R,1608	1	SA
....4	C1110	2203-000426	C-CER,CHIP;0.018nF,5%,50V,C0G,1608	1	SA
....4	C1121	2203-000440	C-CER,CHIP;1nF,10%,50V,X7R,1608	1	SA
....4	C3002	2203-000440	C-CER,CHIP;1nF,10%,50V,X7R,1608	1	SA
....4	C3003	2203-000440	C-CER,CHIP;1nF,10%,50V,X7R,1608	1	SA
....4	C3007	2203-000440	C-CER,CHIP;1nF,10%,50V,X7R,1608	1	SA
....4	C3020	2203-000440	C-CER,CHIP;1nF,10%,50V,X7R,1608	1	SA
....4	C3021	2203-000440	C-CER,CHIP;1nF,10%,50V,X7R,1608	1	SA
....4	C3029	2203-000440	C-CER,CHIP;1nF,10%,50V,X7R,1608	1	SA
....4	C4119	2203-000440	C-CER,CHIP;1nF,10%,50V,X7R,1608	1	SA
....4	C5087	2203-000440	C-CER,CHIP;1nF,10%,50V,X7R,1608	1	SA
....4	C4058	2203-000531	C-CER,CHIP;2.7nF,10%,50V,X7R,1608	1	SA
....4	C4066	2203-000531	C-CER,CHIP;2.7nF,10%,50V,X7R,1608	1	SA
....4	C4001	2203-000552	C-CER,CHIP;0.02nF,5%,50V,C0G,1608	1	SA

ELECTRONIC SERVICE TIRGOVISTE

Level	Loc. No.	Code No.	Description & Specification	Q'ty	SA/SNA
....4	C4011	2203-000552	C-CER,CHIP;0.02nF,5%,50V,C0G,1608	1	SA
....4	C1070	2203-000626	C-CER,CHIP;0.022nF,5%,50V,C0G,1608	1	SA
....4	C1082	2203-000626	C-CER,CHIP;0.022nF,5%,50V,C0G,1608	1	SA
....4	C3012	2203-000626	C-CER,CHIP;0.022nF,5%,50V,C0G,1608	1	SA
....4	C3013	2203-000626	C-CER,CHIP;0.022nF,5%,50V,C0G,1608	1	SA
....4	C3030	2203-000626	C-CER,CHIP;0.022nF,5%,50V,C0G,1608	1	SA
....4	C3031	2203-000626	C-CER,CHIP;0.022nF,5%,50V,C0G,1608	1	SA
....4	C1111	2203-000715	C-CER,CHIP;3.3nF,10%,50V,X7R,1608	1	SA
....4	C1142	2203-000783	C-CER,CHIP;0.33nF,5%,50V,C0G,1608	1	SA
....4	C1152	2203-000783	C-CER,CHIP;0.33nF,5%,50V,C0G,1608	1	SA
....4	C2009	2203-000783	C-CER,CHIP;0.33nF,5%,50V,C0G,1608	1	SA
....4	C2010	2203-000783	C-CER,CHIP;0.33nF,5%,50V,C0G,1608	1	SA
....4	C2015	2203-000783	C-CER,CHIP;0.33nF,5%,50V,C0G,1608	1	SA
....4	C2016	2203-000783	C-CER,CHIP;0.33nF,5%,50V,C0G,1608	1	SA
....4	C2026	2203-000783	C-CER,CHIP;0.33nF,5%,50V,C0G,1608	1	SA
....4	C5076	2203-000783	C-CER,CHIP;0.33nF,5%,50V,C0G,1608	1	SA
....4	C5077	2203-000783	C-CER,CHIP;0.33nF,5%,50V,C0G,1608	1	SA
....4	C1100	2203-000798	C-CER,CHIP;33nF,10%,16V,X7R,TP,1608,-	1	SA
....4	C1101	2203-000798	C-CER,CHIP;33nF,10%,16V,X7R,TP,1608,-	1	SA
....4	C2029	2203-000815	C-CER,CHIP;0.033nF,5%,50V,C0G,1608	1	SA
....4	C2030	2203-000815	C-CER,CHIP;0.033nF,5%,50V,C0G,1608	1	SA
....4	C2031	2203-000815	C-CER,CHIP;0.033nF,5%,50V,C0G,1608	1	SA
....4	C5056	2203-000815	C-CER,CHIP;0.033nF,5%,50V,C0G,1608	1	SA
....4	C5057	2203-000815	C-CER,CHIP;0.033nF,5%,50V,C0G,1608	1	SA
....4	C5058	2203-000815	C-CER,CHIP;0.033nF,5%,50V,C0G,1608	1	SA
....4	C1119	2203-000888	C-CER,CHIP;4.7nF,10%,50V,X7R,1608	1	SA
....4	C1120	2203-000888	C-CER,CHIP;4.7nF,10%,50V,X7R,1608	1	SA
....4	C4003	2203-000888	C-CER,CHIP;4.7nF,10%,50V,X7R,1608	1	SA
....4	C4004	2203-000888	C-CER,CHIP;4.7nF,10%,50V,X7R,1608	1	SA
....4	C5003	2203-000888	C-CER,CHIP;4.7nF,10%,50V,X7R,1608	1	SA
....4	C5004	2203-000888	C-CER,CHIP;4.7nF,10%,50V,X7R,1608	1	SA
....4	C1063	2203-000972	C-CER,CHIP;47nF,10%,16V,X7R,1608	1	SA
....4	C2008	2203-000998	C-CER,CHIP;0.047nF,5%,50V,C0G,1608	1	SA
....4	C2021	2203-000998	C-CER,CHIP;0.047nF,5%,50V,C0G,1608	1	SA
....4	C5063	2203-000998	C-CER,CHIP;0.047nF,5%,50V,C0G,1608	1	SA
....4	C1056	2203-001402	C-CER,CHIP;220nF,+80-20%,16V,Y5V,TP,1608	1	SA
....4	C1164	2203-001607	C-CER,CHIP;0.22nF,5%,50V,NP0,1608	1	SA
....4	C1114	2203-001652	C-CER,CHIP;470nF,+80-20%,16V,Y5V,1608	1	SA
....4	C1116	2203-001652	C-CER,CHIP;470nF,+80-20%,16V,Y5V,1608	1	SA
....4	C1038	2203-001656	C-CER,CHIP;0.47nF,5%,50V,NP0,1608	1	SA
....4	C1061	2203-001656	C-CER,CHIP;0.47nF,5%,50V,NP0,1608	1	SA
....4	C3039	2203-001656	C-CER,CHIP;0.47nF,5%,50V,NP0,1608	1	SA
....4	C1117	2203-001724	C-CER,CHIP;4700nF,+80-20%,16V,Y5V,3216	1	SA
....4	C1003	2203-005005	C-CER,CHIP;100nF,10%,16V,X7R,1608	1	SA
....4	C1011	2203-005005	C-CER,CHIP;100nF,10%,16V,X7R,1608	1	SA
....4	C1032	2203-005005	C-CER,CHIP;100nF,10%,16V,X7R,1608	1	SA
....4	C1039	2203-005005	C-CER,CHIP;100nF,10%,16V,X7R,1608	1	SA
....4	C1066	2203-005005	C-CER,CHIP;100nF,10%,16V,X7R,1608	1	SA
....4	C1068	2203-005005	C-CER,CHIP;100nF,10%,16V,X7R,1608	1	SA
....4	C1071	2203-005005	C-CER,CHIP;100nF,10%,16V,X7R,1608	1	SA
....4	C1072	2203-005005	C-CER,CHIP;100nF,10%,16V,X7R,1608	1	SA
....4	C1073	2203-005005	C-CER,CHIP;100nF,10%,16V,X7R,1608	1	SA
....4	C1074	2203-005005	C-CER,CHIP;100nF,10%,16V,X7R,1608	1	SA
....4	C1078	2203-005005	C-CER,CHIP;100nF,10%,16V,X7R,1608	1	SA
....4	C1079	2203-005005	C-CER,CHIP;100nF,10%,16V,X7R,1608	1	SA
....4	C1093	2203-005005	C-CER,CHIP;100nF,10%,16V,X7R,1608	1	SA
....4	C1104	2203-005005	C-CER,CHIP;100nF,10%,16V,X7R,1608	1	SA
....4	C1108	2203-005005	C-CER,CHIP;100nF,10%,16V,X7R,1608	1	SA
....4	C1129	2203-005005	C-CER,CHIP;100nF,10%,16V,X7R,1608	1	SA
....4	C1130	2203-005005	C-CER,CHIP;100nF,10%,16V,X7R,1608	1	SA

ELECTRONIC SERVICE TIRGOVISTE

Level	Loc. No.	Code No.	Description & Specification	Q'ty	SA/SNA
....4	C1148	2203-005005	C-CER,CHIP;100nF,10%,16V,X7R,1608	1	SA
....4	C1169	2203-005005	C-CER,CHIP;100nF,10%,16V,X7R,1608	1	SA
....4	C3009	2203-005005	C-CER,CHIP;100nF,10%,16V,X7R,1608	1	SA
....4	C3010	2203-005005	C-CER,CHIP;100nF,10%,16V,X7R,1608	1	SA
....4	C3014	2203-005005	C-CER,CHIP;100nF,10%,16V,X7R,1608	1	SA
....4	C3015	2203-005005	C-CER,CHIP;100nF,10%,16V,X7R,1608	1	SA
....4	C3016	2203-005005	C-CER,CHIP;100nF,10%,16V,X7R,1608	1	SA
....4	C3018	2203-005005	C-CER,CHIP;100nF,10%,16V,X7R,1608	1	SA
....4	C3019	2203-005005	C-CER,CHIP;100nF,10%,16V,X7R,1608	1	SA
....4	C3022	2203-005005	C-CER,CHIP;100nF,10%,16V,X7R,1608	1	SA
....4	C3026	2203-005005	C-CER,CHIP;100nF,10%,16V,X7R,1608	1	SA
....4	C3027	2203-005005	C-CER,CHIP;100nF,10%,16V,X7R,1608	1	SA
....4	C3032	2203-005005	C-CER,CHIP;100nF,10%,16V,X7R,1608	1	SA
....4	C3037	2203-005005	C-CER,CHIP;100nF,10%,16V,X7R,1608	1	SA
....4	C3040	2203-005005	C-CER,CHIP;100nF,10%,16V,X7R,1608	1	SA
....4	C3042	2203-005005	C-CER,CHIP;100nF,10%,16V,X7R,1608	1	SA
....4	C3044	2203-005005	C-CER,CHIP;100nF,10%,16V,X7R,1608	1	SA
....4	C3046	2203-005005	C-CER,CHIP;100nF,10%,16V,X7R,1608	1	SA
....4	C3047	2203-005005	C-CER,CHIP;100nF,10%,16V,X7R,1608	1	SA
....4	C3049	2203-005005	C-CER,CHIP;100nF,10%,16V,X7R,1608	1	SA
....4	C4002	2203-005005	C-CER,CHIP;100nF,10%,16V,X7R,1608	1	SA
....4	C4125	2203-005005	C-CER,CHIP;100nF,10%,16V,X7R,1608	1	SA
....4	C4126	2203-005005	C-CER,CHIP;100nF,10%,16V,X7R,1608	1	SA
....4	C4129	2203-005005	C-CER,CHIP;100nF,10%,16V,X7R,1608	1	SA
....4	C5001	2203-005005	C-CER,CHIP;100nF,10%,16V,X7R,1608	1	SA
....4	C5002	2203-005005	C-CER,CHIP;100nF,10%,16V,X7R,1608	1	SA
....4	C5011	2203-005005	C-CER,CHIP;100nF,10%,16V,X7R,1608	1	SA
....4	C5012	2203-005005	C-CER,CHIP;100nF,10%,16V,X7R,1608	1	SA
....4	C5021	2203-005005	C-CER,CHIP;100nF,10%,16V,X7R,1608	1	SA
....4	C5023	2203-005005	C-CER,CHIP;100nF,10%,16V,X7R,1608	1	SA
....4	C5039	2203-005005	C-CER,CHIP;100nF,10%,16V,X7R,1608	1	SA
....4	C5054	2203-005005	C-CER,CHIP;100nF,10%,16V,X7R,1608	1	SA
....4	C1143	2203-005030	C-CER,CHIP;470nF,+80-20%,50V,Y5V,TP,3216	1	SA
....4	C1153	2203-005030	C-CER,CHIP;470nF,+80-20%,50V,Y5V,TP,3216	1	SA
....4	C1031	2203-005065	C-CER,CHIP;1000nF,+80-20%,10V,Y5V,1608	1	SA
....4	C1040	2203-005065	C-CER,CHIP;1000nF,+80-20%,10V,Y5V,1608	1	SA
....4	C1155	2203-005065	C-CER,CHIP;1000nF,+80-20%,10V,Y5V,1608	1	SA
....4	C2038	2203-005065	C-CER,CHIP;1000nF,+80-20%,10V,Y5V,1608	1	SA
....4	C3023	2203-005065	C-CER,CHIP;1000nF,+80-20%,10V,Y5V,1608	1	SA
....4	C3033	2203-005065	C-CER,CHIP;1000nF,+80-20%,10V,Y5V,1608	1	SA
....4	C4117	2203-005065	C-CER,CHIP;1000nF,+80-20%,10V,Y5V,1608	1	SA
....4	C4118	2203-005065	C-CER,CHIP;1000nF,+80-20%,10V,Y5V,1608	1	SA
....4	C1122	2203-005249	C-CER,CHIP;100nF,10%,50V,X7R,1608	1	SA
....4	C1131	2203-005249	C-CER,CHIP;100nF,10%,50V,X7R,1608	1	SA
....4	C1137	2203-005249	C-CER,CHIP;100nF,10%,50V,X7R,1608	1	SA
....4	C1138	2203-005249	C-CER,CHIP;100nF,10%,50V,X7R,1608	1	SA
....4	C1140	2203-005249	C-CER,CHIP;100nF,10%,50V,X7R,1608	1	SA
....4	C1144	2203-005249	C-CER,CHIP;100nF,10%,50V,X7R,1608	1	SA
....4	C1145	2203-005249	C-CER,CHIP;100nF,10%,50V,X7R,1608	1	SA
....4	C1146	2203-005249	C-CER,CHIP;100nF,10%,50V,X7R,1608	1	SA
....4	C1147	2203-005249	C-CER,CHIP;100nF,10%,50V,X7R,1608	1	SA
....4	C1149	2203-005249	C-CER,CHIP;100nF,10%,50V,X7R,1608	1	SA
....4	C1150	2203-005249	C-CER,CHIP;100nF,10%,50V,X7R,1608	1	SA
....4	C1154	2203-005249	C-CER,CHIP;100nF,10%,50V,X7R,1608	1	SA
....4	C1156	2203-005249	C-CER,CHIP;100nF,10%,50V,X7R,1608	1	SA
....4	C1157	2203-005249	C-CER,CHIP;100nF,10%,50V,X7R,1608	1	SA
....4	C1160	2203-005249	C-CER,CHIP;100nF,10%,50V,X7R,1608	1	SA
....4	C1166	2203-005249	C-CER,CHIP;100nF,10%,50V,X7R,1608	1	SA
....4	C4014	2203-005533	C-CER,CHIP;1000nF,20%,6.3V,X7R,TP,1608	1	SA
....4	C4015	2203-005533	C-CER,CHIP;1000nF,20%,6.3V,X7R,TP,1608	1	SA

ELECTRONIC SERVICE TIRGOVISTE

Level	Loc. No.	Code No.	Description & Specification	Q'ty	SA/SNA
....4	C4024	2203-005533	C-CER,CHIP;1000nF,20%,6.3V,X7R,TP,1608	1	SA
....4	C4033	2203-005533	C-CER,CHIP;1000nF,20%,6.3V,X7R,TP,1608	1	SA
....4	C4037	2203-005533	C-CER,CHIP;1000nF,20%,6.3V,X7R,TP,1608	1	SA
....4	C4044	2203-005533	C-CER,CHIP;1000nF,20%,6.3V,X7R,TP,1608	1	SA
....4	C4050	2203-005533	C-CER,CHIP;1000nF,20%,6.3V,X7R,TP,1608	1	SA
....4	C4065	2203-005533	C-CER,CHIP;1000nF,20%,6.3V,X7R,TP,1608	1	SA
....4	C4074	2203-005533	C-CER,CHIP;1000nF,20%,6.3V,X7R,TP,1608	1	SA
....4	C4075	2203-005533	C-CER,CHIP;1000nF,20%,6.3V,X7R,TP,1608	1	SA
....4	C4078	2203-005533	C-CER,CHIP;1000nF,20%,6.3V,X7R,TP,1608	1	SA
....4	C4079	2203-005533	C-CER,CHIP;1000nF,20%,6.3V,X7R,TP,1608	1	SA
....4	C4087	2203-005533	C-CER,CHIP;1000nF,20%,6.3V,X7R,TP,1608	1	SA
....4	C4088	2203-005533	C-CER,CHIP;1000nF,20%,6.3V,X7R,TP,1608	1	SA
....4	C4089	2203-005533	C-CER,CHIP;1000nF,20%,6.3V,X7R,TP,1608	1	SA
....4	C4090	2203-005533	C-CER,CHIP;1000nF,20%,6.3V,X7R,TP,1608	1	SA
....4	C4091	2203-005533	C-CER,CHIP;1000nF,20%,6.3V,X7R,TP,1608	1	SA
....4	C4092	2203-005533	C-CER,CHIP;1000nF,20%,6.3V,X7R,TP,1608	1	SA
....4	C4093	2203-005533	C-CER,CHIP;1000nF,20%,6.3V,X7R,TP,1608	1	SA
....4	C4094	2203-005533	C-CER,CHIP;1000nF,20%,6.3V,X7R,TP,1608	1	SA
....4	C1001	2203-006333	C-CER,CHIP;10000nF,20%,16V,X5R,TP,3216	1	SA
....4	C1012	2203-006333	C-CER,CHIP;10000nF,20%,16V,X5R,TP,3216	1	SA
....4	C1014	2203-006333	C-CER,CHIP;10000nF,20%,16V,X5R,TP,3216	1	SA
....4	C1017	2203-006333	C-CER,CHIP;10000nF,20%,16V,X5R,TP,3216	1	SA
....4	C1018	2203-006333	C-CER,CHIP;10000nF,20%,16V,X5R,TP,3216	1	SA
....4	C1019	2203-006333	C-CER,CHIP;10000nF,20%,16V,X5R,TP,3216	1	SA
....4	C1020	2203-006333	C-CER,CHIP;10000nF,20%,16V,X5R,TP,3216	1	SA
....4	C1023	2203-006333	C-CER,CHIP;10000nF,20%,16V,X5R,TP,3216	1	SA
....4	C1024	2203-006333	C-CER,CHIP;10000nF,20%,16V,X5R,TP,3216	1	SA
....4	C1030	2203-006333	C-CER,CHIP;10000nF,20%,16V,X5R,TP,3216	1	SA
....4	C1033	2203-006333	C-CER,CHIP;10000nF,20%,16V,X5R,TP,3216	1	SA
....4	C1035	2203-006333	C-CER,CHIP;10000nF,20%,16V,X5R,TP,3216	1	SA
....4	C1041	2203-006333	C-CER,CHIP;10000nF,20%,16V,X5R,TP,3216	1	SA
....4	C1044	2203-006333	C-CER,CHIP;10000nF,20%,16V,X5R,TP,3216	1	SA
....4	C1045	2203-006333	C-CER,CHIP;10000nF,20%,16V,X5R,TP,3216	1	SA
....4	C1047	2203-006333	C-CER,CHIP;10000nF,20%,16V,X5R,TP,3216	1	SA
....4	C1048	2203-006333	C-CER,CHIP;10000nF,20%,16V,X5R,TP,3216	1	SA
....4	C1051	2203-006333	C-CER,CHIP;10000nF,20%,16V,X5R,TP,3216	1	SA
....4	C1058	2203-006333	C-CER,CHIP;10000nF,20%,16V,X5R,TP,3216	1	SA
....4	C1060	2203-006333	C-CER,CHIP;10000nF,20%,16V,X5R,TP,3216	1	SA
....4	C1065	2203-006333	C-CER,CHIP;10000nF,20%,16V,X5R,TP,3216	1	SA
....4	C1076	2203-006333	C-CER,CHIP;10000nF,20%,16V,X5R,TP,3216	1	SA
....4	C1080	2203-006333	C-CER,CHIP;10000nF,20%,16V,X5R,TP,3216	1	SA
....4	C1081	2203-006333	C-CER,CHIP;10000nF,20%,16V,X5R,TP,3216	1	SA
....4	C1083	2203-006333	C-CER,CHIP;10000nF,20%,16V,X5R,TP,3216	1	SA
....4	C1085	2203-006333	C-CER,CHIP;10000nF,20%,16V,X5R,TP,3216	1	SA
....4	C1088	2203-006333	C-CER,CHIP;10000nF,20%,16V,X5R,TP,3216	1	SA
....4	C1089	2203-006333	C-CER,CHIP;10000nF,20%,16V,X5R,TP,3216	1	SA
....4	C1090	2203-006333	C-CER,CHIP;10000nF,20%,16V,X5R,TP,3216	1	SA
....4	C1091	2203-006333	C-CER,CHIP;10000nF,20%,16V,X5R,TP,3216	1	SA
....4	C1092	2203-006333	C-CER,CHIP;10000nF,20%,16V,X5R,TP,3216	1	SA
....4	C1096	2203-006333	C-CER,CHIP;10000nF,20%,16V,X5R,TP,3216	1	SA
....4	C1099	2203-006333	C-CER,CHIP;10000nF,20%,16V,X5R,TP,3216	1	SA
....4	C1126	2203-006333	C-CER,CHIP;10000nF,20%,16V,X5R,TP,3216	1	SA
....4	C1136	2203-006333	C-CER,CHIP;10000nF,20%,16V,X5R,TP,3216	1	SA
....4	C3017	2203-006333	C-CER,CHIP;10000nF,20%,16V,X5R,TP,3216	1	SA
....4	C4057	2203-006333	C-CER,CHIP;10000nF,20%,16V,X5R,TP,3216	1	SA
....4	C4064	2203-006333	C-CER,CHIP;10000nF,20%,16V,X5R,TP,3216	1	SA
....4	C4072	2203-006333	C-CER,CHIP;10000nF,20%,16V,X5R,TP,3216	1	SA
....4	C4082	2203-006333	C-CER,CHIP;10000nF,20%,16V,X5R,TP,3216	1	SA
....4	C4122	2203-006333	C-CER,CHIP;10000nF,20%,16V,X5R,TP,3216	1	SA
....4	C5083	2203-006333	C-CER,CHIP;10000nF,20%,16V,X5R,TP,3216	1	SA

ELECTRONIC SERVICE TIRGOVISTE

Level	Loc. No.	Code No.	Description & Specification	Q'ty	SA/SNA
....4	C5086	2203-006333	C-CER,CHIP;10000nF,20%,16V,X5R,TP,3216	1	SA
....4	C2001	2402-000108	C-AL,SMD;10uF,20%,16V,WT,TP,4.3x4.3x5.2m	1	SA
....4	C5037	2402-000108	C-AL,SMD;10uF,20%,16V,WT,TP,4.3x4.3x5.2m	1	SA
....4	C5041	2402-000108	C-AL,SMD;10uF,20%,16V,WT,TP,4.3x4.3x5.2m	1	SA
....4	C1102	2402-001081	C-AL,SMD;100uF,20%,25V,WT,TP,8.3x8.3x10	1	SA
....4	C1125	2402-001083	C-AL,SMD;100uF,20%,50V,GP,TP,10x10.3x10m	1	SA
....4	C5032	2402-001097	C-AL,SMD;0.1UF,20%,50V,WT,TP,4.3X4.3X5.2	1	SA
....4	C5033	2402-001097	C-AL,SMD;0.1UF,20%,50V,WT,TP,4.3X4.3X5.2	1	SA
....4	C1009	2402-001128	C-AL,SMD;100UF,20%,16V,WT,TP,6.3X5.7MM	1	SA
....4	C1010	2402-001128	C-AL,SMD;100UF,20%,16V,WT,TP,6.3X5.7MM	1	SA
....4	C1015	2402-001128	C-AL,SMD;100UF,20%,16V,WT,TP,6.3X5.7MM	1	SA
....4	C1029	2402-001128	C-AL,SMD;100UF,20%,16V,WT,TP,6.3X5.7MM	1	SA
....4	C1036	2402-001128	C-AL,SMD;100UF,20%,16V,WT,TP,6.3X5.7MM	1	SA
....4	C1042	2402-001128	C-AL,SMD;100UF,20%,16V,WT,TP,6.3X5.7MM	1	SA
....4	C1059	2402-001128	C-AL,SMD;100UF,20%,16V,WT,TP,6.3X5.7MM	1	SA
....4	C1112	2402-001128	C-AL,SMD;100UF,20%,16V,WT,TP,6.3X5.7MM	1	SA
....4	C1113	2402-001128	C-AL,SMD;100UF,20%,16V,WT,TP,6.3X5.7MM	1	SA
....4	C1115	2402-001128	C-AL,SMD;100UF,20%,16V,WT,TP,6.3X5.7MM	1	SA
....4	C1123	2402-001128	C-AL,SMD;100UF,20%,16V,WT,TP,6.3X5.7MM	1	SA
....4	C1007	2402-001129	C-AL,SMD;47UF,20%,16V,WT,TP,6.3X5.2MM	1	SA
....4	C1028	2402-001129	C-AL,SMD;47UF,20%,16V,WT,TP,6.3X5.2MM	1	SA
....4	C1064	2402-001129	C-AL,SMD;47UF,20%,16V,WT,TP,6.3X5.2MM	1	SA
....4	C1069	2402-001129	C-AL,SMD;47UF,20%,16V,WT,TP,6.3X5.2MM	1	SA
....4	C1107	2402-001129	C-AL,SMD;47UF,20%,16V,WT,TP,6.3X5.2MM	1	SA
....4	C3036	2402-001129	C-AL,SMD;47UF,20%,16V,WT,TP,6.3X5.2MM	1	SA
....4	C3038	2402-001129	C-AL,SMD;47UF,20%,16V,WT,TP,6.3X5.2MM	1	SA
....4	C4010	2402-001129	C-AL,SMD;47UF,20%,16V,WT,TP,6.3X5.2MM	1	SA
....4	C5042	2402-001129	C-AL,SMD;47UF,20%,16V,WT,TP,6.3X5.2MM	1	SA
....4	C1106	2402-001160	C-AL,SMD;330UF,20%,16V,WT,TP,1008	1	SA
....4	C1077	2402-001178	C-AL,SMD;10uF,20%,16V,WT,TP,4.3x4.3x5.8m	1	SA
....4	C1139	2402-001178	C-AL,SMD;10uF,20%,16V,WT,TP,4.3x4.3x5.8m	1	SA
....4	C2017	2402-001178	C-AL,SMD;10uF,20%,16V,WT,TP,4.3x4.3x5.8m	1	SA
....4	C3004	2402-001178	C-AL,SMD;10uF,20%,16V,WT,TP,4.3x4.3x5.8m	1	SA
....4	C3006	2402-001178	C-AL,SMD;10uF,20%,16V,WT,TP,4.3x4.3x5.8m	1	SA
....4	C3008	2402-001178	C-AL,SMD;10uF,20%,16V,WT,TP,4.3x4.3x5.8m	1	SA
....4	C3011	2402-001178	C-AL,SMD;10uF,20%,16V,WT,TP,4.3x4.3x5.8m	1	SA
....4	C3028	2402-001178	C-AL,SMD;10uF,20%,16V,WT,TP,4.3x4.3x5.8m	1	SA
....4	C3041	2402-001178	C-AL,SMD;10uF,20%,16V,WT,TP,4.3x4.3x5.8m	1	SA
....4	C3043	2402-001178	C-AL,SMD;10uF,20%,16V,WT,TP,4.3x4.3x5.8m	1	SA
....4	C3045	2402-001178	C-AL,SMD;10uF,20%,16V,WT,TP,4.3x4.3x5.8m	1	SA
....4	C3048	2402-001178	C-AL,SMD;10uF,20%,16V,WT,TP,4.3x4.3x5.8m	1	SA
....4	C3050	2402-001178	C-AL,SMD;10uF,20%,16V,WT,TP,4.3x4.3x5.8m	1	SA
....4	C3051	2402-001178	C-AL,SMD;10uF,20%,16V,WT,TP,4.3x4.3x5.8m	1	SA
....4	C1057	2402-001183	C-AL,SMD;22UF,20%,16V,WT,TP,5.3X5.3X6MM	1	SA
....4	C1128	2402-001183	C-AL,SMD;22UF,20%,16V,WT,TP,5.3X5.3X6MM	1	SA
....4	C1167	2402-001183	C-AL,SMD;22UF,20%,16V,WT,TP,5.3X5.3X6MM	1	SA
....4	C4123	2402-001183	C-AL,SMD;22UF,20%,16V,WT,TP,5.3X5.3X6MM	1	SA
....4	C5005	2402-001183	C-AL,SMD;22UF,20%,16V,WT,TP,5.3X5.3X6MM	1	SA
....4	C5016	2402-001183	C-AL,SMD;22UF,20%,16V,WT,TP,5.3X5.3X6MM	1	SA
....4	C1127	2402-001221	C-AL,SMD;470UF,20%,16V,-,TP,A8.3XB8.3XL1	1	SA
....4	C1165	2402-001221	C-AL,SMD;470UF,20%,16V,-,TP,A8.3XB8.3XL1	1	SA
....4	C4030	2402-001226	C-AL,SMD;4.7UF,20%,35V,HR,TP,4.3X4.3X5.8	1	SA
....4	C4047	2402-001226	C-AL,SMD;4.7UF,20%,35V,HR,TP,4.3X4.3X5.8	1	SA
....4	C4051	2402-001226	C-AL,SMD;4.7UF,20%,35V,HR,TP,4.3X4.3X5.8	1	SA
....4	C4127	2402-001226	C-AL,SMD;4.7UF,20%,35V,HR,TP,4.3X4.3X5.8	1	SA
....4	C5078	2402-001257	C-AL,SMD;470uF,20%,16V,-,TP,8.3*10	1	SA
....4	C5079	2402-001257	C-AL,SMD;470uF,20%,16V,-,TP,8.3*10	1	SA
....4	C5080	2402-001257	C-AL,SMD;470uF,20%,16V,-,TP,8.3*10	1	SA
....4	C1095	2409-001029	C-ORGANIC;120uF,20%,6.3V,WT,TP,10.3x10.3	1	SA
....4	T0052	2703-000274	INDUCTOR-SMD;2.2uH,10%,2012	1	SA

ELECTRONIC SERVICE TIRGOVISTE

Level	Loc. No.	Code No.	Description & Specification	Q'ty	SA/SNA
....4	T0052	2703-000398	INDUCTOR-SMD;10uH,10%,3225	1	SA
....4	T0052	2703-000398	INDUCTOR-SMD;10uH,10%,3225	1	SA
....4	T0052	2703-000398	INDUCTOR-SMD;10uH,10%,3225	1	SA
....4	T0052	2703-000398	INDUCTOR-SMD;10uH,10%,3225	1	SA
....4	T0052	2703-000398	INDUCTOR-SMD;10uH,10%,3225	1	SA
....4	T0052	2703-000398	INDUCTOR-SMD;10uH,10%,3225	1	SA
....4	T0052	2703-000398	INDUCTOR-SMD;10uH,10%,3225	1	SA
....4	T0052	2703-000398	INDUCTOR-SMD;10uH,10%,3225	1	SA
....4	T0052	2703-000398	INDUCTOR-SMD;10uH,10%,3225	1	SA
....4	T0052	2703-000398	INDUCTOR-SMD;10uH,10%,3225	1	SA
....4	T0052	2703-000398	INDUCTOR-SMD;10uH,10%,3225	1	SA
....4	T0052	2703-000398	INDUCTOR-SMD;10uH,10%,3225	1	SA
....4	T0052	2703-000398	INDUCTOR-SMD;10uH,10%,3225	1	SA
....4	T0052	2703-000398	INDUCTOR-SMD;10uH,10%,3225	1	SA
....4	T0052	2703-000398	INDUCTOR-SMD;10uH,10%,3225	1	SA
....4	T0052	2703-000398	INDUCTOR-SMD;10uH,10%,3225	1	SA
....4	T0052	2703-001229	INDUCTOR-SMD;2.2uH,10%,1608	1	SA
....4	T0052	2703-001229	INDUCTOR-SMD;2.2uH,10%,1608	1	SA
....4	T0052	2703-001229	INDUCTOR-SMD;2.2uH,10%,1608	1	SA
....4	T0052	2703-001229	INDUCTOR-SMD;2.2uH,10%,1608	1	SA
....4	T0052	2703-001229	INDUCTOR-SMD;2.2uH,10%,1608	1	SA
....4	T0052	2703-001229	INDUCTOR-SMD;2.2uH,10%,1608	1	SA
....4	T0052	2703-001778	INDUCTOR-SMD;3.3uH,20%,3225	1	SA
....4	T0052	2703-002722	INDUCTOR-SMD;22uH,20%,12x12mm	1	SA
....4	X3002	2801-003326	CRYSTAL-SMD;24MHZ,30PPM,28-ABX,20PF,50OH	1	SA
....4	X3001	2801-003923	CRYSTAL-SMD;10MHz,30ppm,28-AAN,20pF,60oh	1	SA
....4	X1001	2801-003954	CRYSTAL-SMD;27MHz,30ppm,28-AAN,16pF,50oh	1	SA
....4	X4001	2801-004483	CRYSTAL-SMD;28.322MHz,30ppm,HC-49,20pF,5	1	SA
....4	F103	2901-001114	FILTER-EMI SMD;25VDC,2.0ADC,-,100nF,3.2x	1	SA
....4	T0568	3301-000314	BEAD-SMD;120ohm,1.6x0.8x0.8mm,-,-,-	1	SNA
....4	T0568	3301-000314	BEAD-SMD;120ohm,1.6x0.8x0.8mm,-,-,-	1	SNA
....4	T0568	3301-001145	BEAD-SMD;60ohm,4516,TP,70ohm/45MHz,82ohm	1	SNA
....4	T0568	3301-001145	BEAD-SMD;60ohm,4516,TP,70ohm/45MHz,82ohm	1	SNA
....4	T0568	3301-001145	BEAD-SMD;60ohm,4516,TP,70ohm/45MHz,82ohm	1	SNA
....4	T0568	3301-001145	BEAD-SMD;60ohm,4516,TP,70ohm/45MHz,82ohm	1	SNA
....4	T0568	3301-001236	BEAD-SMD;60ohm,1608,-,-,-	1	SNA
....4	T0568	3301-001236	BEAD-SMD;60ohm,1608,-,-,-	1	SNA
....4	T0568	3301-001236	BEAD-SMD;60ohm,1608,-,-,-	1	SNA
....4	T0568	3301-001236	BEAD-SMD;60ohm,1608,-,-,-	1	SNA
....4	T0568	3301-001236	BEAD-SMD;60ohm,1608,-,-,-	1	SNA
....4	T0568	3301-001236	BEAD-SMD;60ohm,1608,-,-,-	1	SNA
....4	T0568	3301-001324	BEAD-SMD;15ohm,2012,600mA,TP,,,0.1ohm	1	SNA
....4	T0568	3301-001324	BEAD-SMD;15ohm,2012,600mA,TP,,,0.1ohm	1	SNA
....4	T0568	3301-001324	BEAD-SMD;15ohm,2012,600mA,TP,,,0.1ohm	1	SNA
....4	T0568	3301-001324	BEAD-SMD;15ohm,2012,600mA,TP,,,0.1ohm	1	SNA
....4	T0568	3301-001324	BEAD-SMD;15ohm,2012,600mA,TP,,,0.1ohm	1	SNA
....4	T0568	3301-001324	BEAD-SMD;15ohm,2012,600mA,TP,,,0.1ohm	1	SNA
....4	T0568	3301-001324	BEAD-SMD;15ohm,2012,600mA,TP,,,0.1ohm	1	SNA
....4	T0568	3301-001324	BEAD-SMD;15ohm,2012,600mA,TP,,,0.1ohm	1	SNA
....4	T0568	3301-001324	BEAD-SMD;15ohm,2012,600mA,TP,,,0.1ohm	1	SNA
....4	T0568	3301-001324	BEAD-SMD;15ohm,2012,600mA,TP,,,0.1ohm	1	SNA
....4	T0568	3301-001404	BEAD-SMD;30ohm,2012,TP,-,-	1	SA
....4	T0568	3301-001404	BEAD-SMD;30ohm,2012,TP,-,-	1	SA
....4	T0568	3301-001404	BEAD-SMD;30ohm,2012,TP,-,-	1	SA
....4	T0568	3301-001404	BEAD-SMD;30ohm,2012,TP,-,-	1	SA
....4	T0568	3301-001404	BEAD-SMD;30ohm,2012,TP,-,-	1	SA
....4	T0568	3301-001404	BEAD-SMD;30ohm,2012,TP,-,-	1	SA

ELECTRONIC SERVICE TIRGOVISTE

Level	Loc. No.	Code No.	Description & Specification	Q'ty	SA/SNA
....4	T0568	3301-001569	BEAD-SMD;600ohm,2012,1000mA,TP,520ohm/90	1	SNA
....4	T0568	3301-001569	BEAD-SMD;600ohm,2012,1000mA,TP,520ohm/90	1	SNA
....4	T0568	3301-001569	BEAD-SMD;600ohm,2012,1000mA,TP,520ohm/90	1	SNA
....4	CN2001	3701-001311	CONNECTOR-HDMI;21P,2R,FEMALE,SMD-S,AU30U	1	SA
....4	CN1003	3711-005291	HEADER-BOARD TO CABLE;BOX,2P,1R,2MM,SMD-	1	SA
....4	CN1002	3711-005292	HEADER-BOARD TO CABLE;BOX,3P,1R,2MM,SMD-	1	SA
....4	CN5001	3711-005497	HEADER-BOARD TO CABLE;BOX,15P,1R,1.25MM,	1	SA
....4	M0018	BN97-00805F	ASSY MICOM;T-XXXX-XXXX,LE32R73BDX/XEU49B	1	SA
.....5	IC115	1107-001555	IC-FLASH MEMORY;49BV802A,8MBIT,1MX8/512K	1	SNA
....4	M0018	BN97-00805G	ASSY MICOM;T-XXXX-XXXX,LE32R73BDX/XEU24C	1	SA
.....5	IC520	0903-001389	IC-MICROCONTROLLER;S3F866B,8Bit,QFP,44P,	1	SNA
....4	R1057	2007-007299	R-CHIP;6.81Kohm,1%,1/10W,TP,1608	1	SA
....4	R2024	2007-000040	R-CHIP;150ohm,1%,1/10W,TP,1608	1	SA
....4	R2119	2007-000287	R-CHIP;100OHM,1%,1/10W,TP,1608	1	SA
....4	R2030	2007-001131	R-CHIP;68ohm,1%,1/10W,TP,1608	1	SA
....4	R2056	2007-001131	R-CHIP;68ohm,1%,1/10W,TP,1608	1	SA
....4	R2118	2007-007733	R-CHIP;51ohm,1%,1/10W,TP,1608	1	SA
....4	T0052	2703-002915	INDUCTOR-SMD;22uH,20%,8080	1	SA
....4	T0052	2703-002915	INDUCTOR-SMD;22uH,20%,8080	1	SA
....4	T0052	2703-002915	INDUCTOR-SMD;22uH,20%,8080	1	SA
....4	T0052	2703-002915	INDUCTOR-SMD;22uH,20%,8080	1	SA
....4	R4121	2007-000075	R-CHIP;220ohm,5%,1/10W,TP,1608	1	SA
....4	R4122	2007-000903	R-CHIP;430ohm,1%,1/10W,TP,1608	1	SA
....4	C5024	2402-000179	C-AL,SMD;47uF,20%,16V,GP,TP,6.6x6.6x5.7m	1	SA
....4	C4012	2402-001059	C-AL,SMD;220UF,20%,6.3V,-,TP,6X6.6X6.6	1	SA
....4	C4013	2402-001059	C-AL,SMD;220UF,20%,6.3V,-,TP,6X6.6X6.6	1	SA
....4	T0568	3301-001393	BEAD-SMD;60ohm,3216,1500mA,TP,41ohm/40MH	1	SNA
....4	T0077	BN41-00700A	PCB MAIN;CAMBRIDGE,FR-4,4,MP1.0,1.6T,192	1	SNA
...3	T0562	6046-001013	STAND OFF;M3,L5,Ni PLT,SUM24L,#4-40	2	SNA
..2	T0422	BN94-00887A	ASSY PCB MISC-DTV MODULE;DTV MODULE,XEF	1	SNA
...3	T0245	0202-001522	SOLDER-WIRE FLUX;LFA3-107,-,D1.2,96.5Sn/	0.003	SNA
...3	CN902	3703-001124	CONNECTOR-BACK PANEL;32P,2R,MALE,ANGLE,A	1	SA
...3	CN902	3703-001124	CONNECTOR-BACK PANEL;32P,2R,MALE,ANGLE,A	1	SA
...3	DJ301	3709-001346	CONNECTOR-CARD SLOT;68P,0.27mm,ANGLE,AU1	1	SA
...3	DJ402	3722-001055	JACK-PHONE;5P/2C,AG,BLK,ANGLE	1	SA
...3	T0510	BN97-00843A	ASSY SMD-MAIN;DTV MODULE,XEF	1	SNA
....4	CIS05	0202-001477	SOLDER-CREAM;LST309-M,-,D20~45§-,96.5Sn/	0.465	SNA
....4	DQ701	0501-000434	TR-SMALL SIGNAL;KTC3875S-GR,NPN,150mW,SO	1	SA
....4	DQ401	0501-000669	TR-SMALL SIGNAL;KTA1505Y,PNP,150mW,SOT-2	1	SA
....4	DQ402	0501-000669	TR-SMALL SIGNAL;KTA1505Y,PNP,150mW,SOT-2	1	SA
....4	DQ703	0501-000669	TR-SMALL SIGNAL;KTA1505Y,PNP,150mW,SOT-2	1	SA
....4	DQ704	0501-000669	TR-SMALL SIGNAL;KTA1505Y,PNP,150mW,SOT-2	1	SA
....4	IC104	0801-002095	IC-CMOS LOGIC;74LCX245,TRANSCEIVER,TSSOP	1	SA
....4	IC104	0801-002237	IC-CMOS LOGIC;74V(A)HC1G04,INVERTER,SC70	1	SA
....4	IC104	0801-002394	IC-CMOS LOGIC;74LCX32,OR GATE,SOIC,14P,1	1	SA
....4	IC104	0801-002407	IC-CMOS LOGIC;74LCX08,AND GATE,SOIC,14P,	1	SA
....4	IC104	0801-002683	IC-CMOS LOGIC;74HCT245,TRANSCEIVER,TSSOP	1	SA
....4	IC104	0801-002709	IC-CMOS LOGIC;74HC373,D FLIP-FLOP,TSSOP,	1	SA
....4	IC104	0801-002709	IC-CMOS LOGIC;74HC373,D FLIP-FLOP,TSSOP,	1	SA
....4	IC107	1002-001227	IC-D/A CONVERTER;CS4340-KSR,24BIT,SOP,16	1	SA
....4	DU402	1006-001165	IC-LINE TRANSCEIVER;MAX3243CDBR,SSOP,28P	1	SA
....4	IC113	1105-001305	IC-DRAM;4S641632,-,64MBIT,1MX16X4BIT,TSO	1	SA
....4	IC113	1105-001308	IC-DRAM;K4S281632,128Mbit,8Mx16,TSOP,54P	1	SA
....4	DU701	1203-001824	IC-VOL. DETECTOR;7042,SOT-89,3P,-,PLASTI	1	SA
....4	T0087	1203-002842	IC-POSI.FIXED REG.;AP1117D-33A,TO-252,3P	1	SA
....4	DU101	1204-002400	IC-DECODER;STI5517SUA,PBGA,416P,27x27mm,	1	SA
....4	DR155	2007-000052	R-CHIP;10Kohm,1%,1/10W,TP,1608	1	SA
....4	DR156	2007-000052	R-CHIP;10Kohm,1%,1/10W,TP,1608	1	SA
....4	DR140	2007-000070	R-CHIP;0ohm,5%,1/10W,TP,1608	1	SA
....4	DR154	2007-000070	R-CHIP;0ohm,5%,1/10W,TP,1608	1	SA

ELECTRONIC SERVICE TIRGOVISTE

Level	Loc. No.	Code No.	Description & Specification	Q'ty	SA/SNA
....4	DR158	2007-000070	R-CHIP;0ohm,5%,1/10W,TP,1608	1	SA
....4	DR159	2007-000070	R-CHIP;0ohm,5%,1/10W,TP,1608	1	SA
....4	DR811	2007-000070	R-CHIP;0ohm,5%,1/10W,TP,1608	1	SA
....4	DR812	2007-000070	R-CHIP;0ohm,5%,1/10W,TP,1608	1	SA
....4	DR907	2007-000070	R-CHIP;0ohm,5%,1/10W,TP,1608	1	SA
....4	OR112	2007-000070	R-CHIP;0ohm,5%,1/10W,TP,1608	1	SA
....4	OR113	2007-000070	R-CHIP;0ohm,5%,1/10W,TP,1608	1	SA
....4	DR1102	2007-000072	R-CHIP;47ohm,5%,1/10W,TP,1608	1	SA
....4	DR111	2007-000072	R-CHIP;47ohm,5%,1/10W,TP,1608	1	SA
....4	DR116	2007-000072	R-CHIP;47ohm,5%,1/10W,TP,1608	1	SA
....4	DR169	2007-000072	R-CHIP;47ohm,5%,1/10W,TP,1608	1	SA
....4	DR170	2007-000072	R-CHIP;47ohm,5%,1/10W,TP,1608	1	SA
....4	DR174	2007-000072	R-CHIP;47ohm,5%,1/10W,TP,1608	1	SA
....4	DR176	2007-000072	R-CHIP;47ohm,5%,1/10W,TP,1608	1	SA
....4	DR182	2007-000072	R-CHIP;47ohm,5%,1/10W,TP,1608	1	SA
....4	DR183	2007-000072	R-CHIP;47ohm,5%,1/10W,TP,1608	1	SA
....4	DR184	2007-000072	R-CHIP;47ohm,5%,1/10W,TP,1608	1	SA
....4	DR185	2007-000072	R-CHIP;47ohm,5%,1/10W,TP,1608	1	SA
....4	DR186	2007-000072	R-CHIP;47ohm,5%,1/10W,TP,1608	1	SA
....4	DR187	2007-000072	R-CHIP;47ohm,5%,1/10W,TP,1608	1	SA
....4	DR195	2007-000072	R-CHIP;47ohm,5%,1/10W,TP,1608	1	SA
....4	DR196	2007-000072	R-CHIP;47ohm,5%,1/10W,TP,1608	1	SA
....4	DR197	2007-000072	R-CHIP;47ohm,5%,1/10W,TP,1608	1	SA
....4	DR198	2007-000072	R-CHIP;47ohm,5%,1/10W,TP,1608	1	SA
....4	DR199	2007-000072	R-CHIP;47ohm,5%,1/10W,TP,1608	1	SA
....4	DR202	2007-000072	R-CHIP;47ohm,5%,1/10W,TP,1608	1	SA
....4	DR203	2007-000072	R-CHIP;47ohm,5%,1/10W,TP,1608	1	SA
....4	DR204	2007-000072	R-CHIP;47ohm,5%,1/10W,TP,1608	1	SA
....4	DR501	2007-000072	R-CHIP;47ohm,5%,1/10W,TP,1608	1	SA
....4	DR902	2007-000072	R-CHIP;47ohm,5%,1/10W,TP,1608	1	SA
....4	DR905	2007-000072	R-CHIP;47ohm,5%,1/10W,TP,1608	1	SA
....4	DR906	2007-000072	R-CHIP;47ohm,5%,1/10W,TP,1608	1	SA
....4	DR916	2007-000072	R-CHIP;47ohm,5%,1/10W,TP,1608	1	SA
....4	DR917	2007-000072	R-CHIP;47ohm,5%,1/10W,TP,1608	1	SA
....4	DR923	2007-000072	R-CHIP;47ohm,5%,1/10W,TP,1608	1	SA
....4	DR104	2007-000074	R-CHIP;100ohm,5%,1/10W,TP,1608	1	SA
....4	DR105	2007-000074	R-CHIP;100ohm,5%,1/10W,TP,1608	1	SA
....4	DR1101	2007-000074	R-CHIP;100ohm,5%,1/10W,TP,1608	1	SA
....4	DR112	2007-000074	R-CHIP;100ohm,5%,1/10W,TP,1608	1	SA
....4	DR113	2007-000074	R-CHIP;100ohm,5%,1/10W,TP,1608	1	SA
....4	DR118	2007-000074	R-CHIP;100ohm,5%,1/10W,TP,1608	1	SA
....4	DR119	2007-000074	R-CHIP;100ohm,5%,1/10W,TP,1608	1	SA
....4	DR120	2007-000074	R-CHIP;100ohm,5%,1/10W,TP,1608	1	SA
....4	DR121	2007-000074	R-CHIP;100ohm,5%,1/10W,TP,1608	1	SA
....4	DR122	2007-000074	R-CHIP;100ohm,5%,1/10W,TP,1608	1	SA
....4	DR123	2007-000074	R-CHIP;100ohm,5%,1/10W,TP,1608	1	SA
....4	DR124	2007-000074	R-CHIP;100ohm,5%,1/10W,TP,1608	1	SA
....4	DR125	2007-000074	R-CHIP;100ohm,5%,1/10W,TP,1608	1	SA
....4	DR126	2007-000074	R-CHIP;100ohm,5%,1/10W,TP,1608	1	SA
....4	DR127	2007-000074	R-CHIP;100ohm,5%,1/10W,TP,1608	1	SA
....4	DR128	2007-000074	R-CHIP;100ohm,5%,1/10W,TP,1608	1	SA
....4	DR129	2007-000074	R-CHIP;100ohm,5%,1/10W,TP,1608	1	SA
....4	DR130	2007-000074	R-CHIP;100ohm,5%,1/10W,TP,1608	1	SA
....4	DR131	2007-000074	R-CHIP;100ohm,5%,1/10W,TP,1608	1	SA
....4	DR137	2007-000074	R-CHIP;100ohm,5%,1/10W,TP,1608	1	SA
....4	DR138	2007-000074	R-CHIP;100ohm,5%,1/10W,TP,1608	1	SA
....4	DR145	2007-000074	R-CHIP;100ohm,5%,1/10W,TP,1608	1	SA
....4	DR146	2007-000074	R-CHIP;100ohm,5%,1/10W,TP,1608	1	SA
....4	DR147	2007-000074	R-CHIP;100ohm,5%,1/10W,TP,1608	1	SA
....4	DR148	2007-000074	R-CHIP;100ohm,5%,1/10W,TP,1608	1	SA

ELECTRONIC SERVICE TARGOVISTE

Level	Loc. No.	Code No.	Description & Specification	Q'ty	SA/SNA
....4	DR149	2007-000074	R-CHIP;100ohm,5%,1/10W,TP,1608	1	SA
....4	DR150	2007-000074	R-CHIP;100ohm,5%,1/10W,TP,1608	1	SA
....4	DR151	2007-000074	R-CHIP;100ohm,5%,1/10W,TP,1608	1	SA
....4	DR152	2007-000074	R-CHIP;100ohm,5%,1/10W,TP,1608	1	SA
....4	DR160	2007-000074	R-CHIP;100ohm,5%,1/10W,TP,1608	1	SA
....4	DR161	2007-000074	R-CHIP;100ohm,5%,1/10W,TP,1608	1	SA
....4	DR166	2007-000074	R-CHIP;100ohm,5%,1/10W,TP,1608	1	SA
....4	DR171	2007-000074	R-CHIP;100ohm,5%,1/10W,TP,1608	1	SA
....4	DR172	2007-000074	R-CHIP;100ohm,5%,1/10W,TP,1608	1	SA
....4	DR175	2007-000074	R-CHIP;100ohm,5%,1/10W,TP,1608	1	SA
....4	DR180	2007-000074	R-CHIP;100ohm,5%,1/10W,TP,1608	1	SA
....4	DR181	2007-000074	R-CHIP;100ohm,5%,1/10W,TP,1608	1	SA
....4	DR200	2007-000074	R-CHIP;100ohm,5%,1/10W,TP,1608	1	SA
....4	DR201	2007-000074	R-CHIP;100ohm,5%,1/10W,TP,1608	1	SA
....4	DR221	2007-000074	R-CHIP;100ohm,5%,1/10W,TP,1608	1	SA
....4	DR400	2007-000074	R-CHIP;100ohm,5%,1/10W,TP,1608	1	SA
....4	DR401	2007-000074	R-CHIP;100ohm,5%,1/10W,TP,1608	1	SA
....4	DR402	2007-000074	R-CHIP;100ohm,5%,1/10W,TP,1608	1	SA
....4	DR403	2007-000074	R-CHIP;100ohm,5%,1/10W,TP,1608	1	SA
....4	DR404	2007-000074	R-CHIP;100ohm,5%,1/10W,TP,1608	1	SA
....4	DR405	2007-000074	R-CHIP;100ohm,5%,1/10W,TP,1608	1	SA
....4	DR406	2007-000074	R-CHIP;100ohm,5%,1/10W,TP,1608	1	SA
....4	DR407	2007-000074	R-CHIP;100ohm,5%,1/10W,TP,1608	1	SA
....4	DR419	2007-000074	R-CHIP;100ohm,5%,1/10W,TP,1608	1	SA
....4	DR704	2007-000074	R-CHIP;100ohm,5%,1/10W,TP,1608	1	SA
....4	DR162	2007-000076	R-CHIP;330ohm,5%,1/10W,TP,1608	1	SA
....4	DR163	2007-000076	R-CHIP;330ohm,5%,1/10W,TP,1608	1	SA
....4	DR164	2007-000076	R-CHIP;330ohm,5%,1/10W,TP,1608	1	SA
....4	DR165	2007-000076	R-CHIP;330ohm,5%,1/10W,TP,1608	1	SA
....4	DR502	2007-000078	R-CHIP;1Kohm,5%,1/10W,TP,1608	1	SA
....4	DR503	2007-000078	R-CHIP;1Kohm,5%,1/10W,TP,1608	1	SA
....4	DR505	2007-000078	R-CHIP;1Kohm,5%,1/10W,TP,1608	1	SA
....4	DR702	2007-000078	R-CHIP;1Kohm,5%,1/10W,TP,1608	1	SA
....4	DR114	2007-000084	R-CHIP;4.7Kohm,5%,1/10W,TP,1608	1	SA
....4	DR139	2007-000084	R-CHIP;4.7Kohm,5%,1/10W,TP,1608	1	SA
....4	DR141	2007-000084	R-CHIP;4.7Kohm,5%,1/10W,TP,1608	1	SA
....4	DR142	2007-000084	R-CHIP;4.7Kohm,5%,1/10W,TP,1608	1	SA
....4	DR143	2007-000084	R-CHIP;4.7Kohm,5%,1/10W,TP,1608	1	SA
....4	DR144	2007-000084	R-CHIP;4.7Kohm,5%,1/10W,TP,1608	1	SA
....4	DR153	2007-000084	R-CHIP;4.7Kohm,5%,1/10W,TP,1608	1	SA
....4	DR417	2007-000084	R-CHIP;4.7Kohm,5%,1/10W,TP,1608	1	SA
....4	DR418	2007-000084	R-CHIP;4.7Kohm,5%,1/10W,TP,1608	1	SA
....4	DR701	2007-000084	R-CHIP;4.7Kohm,5%,1/10W,TP,1608	1	SA
....4	DR703	2007-000084	R-CHIP;4.7Kohm,5%,1/10W,TP,1608	1	SA
....4	DR705	2007-000084	R-CHIP;4.7Kohm,5%,1/10W,TP,1608	1	SA
....4	DR707	2007-000084	R-CHIP;4.7Kohm,5%,1/10W,TP,1608	1	SA
....4	DR117	2007-000090	R-CHIP;10Kohm,5%,1/10W,TP,1608	1	SA
....4	DR177	2007-000090	R-CHIP;10Kohm,5%,1/10W,TP,1608	1	SA
....4	DR178	2007-000090	R-CHIP;10Kohm,5%,1/10W,TP,1608	1	SA
....4	DR179	2007-000090	R-CHIP;10Kohm,5%,1/10W,TP,1608	1	SA
....4	DR188	2007-000090	R-CHIP;10Kohm,5%,1/10W,TP,1608	1	SA
....4	DR189	2007-000090	R-CHIP;10Kohm,5%,1/10W,TP,1608	1	SA
....4	DR190	2007-000090	R-CHIP;10Kohm,5%,1/10W,TP,1608	1	SA
....4	DR191	2007-000090	R-CHIP;10Kohm,5%,1/10W,TP,1608	1	SA
....4	DR192	2007-000090	R-CHIP;10Kohm,5%,1/10W,TP,1608	1	SA
....4	DR193	2007-000090	R-CHIP;10Kohm,5%,1/10W,TP,1608	1	SA
....4	DR194	2007-000090	R-CHIP;10Kohm,5%,1/10W,TP,1608	1	SA
....4	DR416	2007-000090	R-CHIP;10Kohm,5%,1/10W,TP,1608	1	SA
....4	DR423	2007-000090	R-CHIP;10Kohm,5%,1/10W,TP,1608	1	SA
....4	DR424	2007-000090	R-CHIP;10Kohm,5%,1/10W,TP,1608	1	SA

ELECTRONIC SERVICE TARGOVISTE

Level	Loc. No.	Code No.	Description & Specification	Q'ty	SA/SNA
....4	DR632	2007-000090	R-CHIP;10Kohm,5%,1/10W,TP,1608	1	SA
....4	DR633	2007-000090	R-CHIP;10Kohm,5%,1/10W,TP,1608	1	SA
....4	DR901	2007-000090	R-CHIP;10Kohm,5%,1/10W,TP,1608	1	SA
....4	DR903	2007-000090	R-CHIP;10Kohm,5%,1/10W,TP,1608	1	SA
....4	DR904	2007-000090	R-CHIP;10Kohm,5%,1/10W,TP,1608	1	SA
....4	DR918	2007-000090	R-CHIP;10Kohm,5%,1/10W,TP,1608	1	SA
....4	DR919	2007-000090	R-CHIP;10Kohm,5%,1/10W,TP,1608	1	SA
....4	DR920	2007-000090	R-CHIP;10Kohm,5%,1/10W,TP,1608	1	SA
....4	DR921	2007-000090	R-CHIP;10Kohm,5%,1/10W,TP,1608	1	SA
....4	DR922	2007-000090	R-CHIP;10Kohm,5%,1/10W,TP,1608	1	SA
....4	DR700	2007-000097	R-CHIP;47Kohm,5%,1/10W,TP,1608	1	SA
....4	DR706	2007-000097	R-CHIP;47Kohm,5%,1/10W,TP,1608	1	SA
....4	DR102	2007-000102	R-CHIP;100Kohm,5%,1/10W,TP,1608	1	SA
....4	DR408	2007-000113	R-CHIP;33ohm,5%,1/10W,TP,1608	1	SA
....4	DR409	2007-000113	R-CHIP;33ohm,5%,1/10W,TP,1608	1	SA
....4	DR410	2007-000113	R-CHIP;33ohm,5%,1/10W,TP,1608	1	SA
....4	DR411	2007-000113	R-CHIP;33ohm,5%,1/10W,TP,1608	1	SA
....4	DR412	2007-000113	R-CHIP;33ohm,5%,1/10W,TP,1608	1	SA
....4	DR413	2007-000113	R-CHIP;33ohm,5%,1/10W,TP,1608	1	SA
....4	DR414	2007-000113	R-CHIP;33ohm,5%,1/10W,TP,1608	1	SA
....4	DR415	2007-000113	R-CHIP;33ohm,5%,1/10W,TP,1608	1	SA
....4	DR601	2007-000113	R-CHIP;33ohm,5%,1/10W,TP,1608	1	SA
....4	DR908	2007-000113	R-CHIP;33ohm,5%,1/10W,TP,1608	1	SA
....4	DR909	2007-000113	R-CHIP;33ohm,5%,1/10W,TP,1608	1	SA
....4	DR910	2007-000113	R-CHIP;33ohm,5%,1/10W,TP,1608	1	SA
....4	DR911	2007-000113	R-CHIP;33ohm,5%,1/10W,TP,1608	1	SA
....4	DR912	2007-000113	R-CHIP;33ohm,5%,1/10W,TP,1608	1	SA
....4	DR913	2007-000113	R-CHIP;33ohm,5%,1/10W,TP,1608	1	SA
....4	DR914	2007-000113	R-CHIP;33ohm,5%,1/10W,TP,1608	1	SA
....4	DR915	2007-000113	R-CHIP;33ohm,5%,1/10W,TP,1608	1	SA
....4	DR999	2007-000113	R-CHIP;33ohm,5%,1/10W,TP,1608	1	SA
....4	DR101	2007-000119	R-CHIP;560ohm,5%,1/10W,TP,1608	1	SA
....4	DR173	2007-000372	R-CHIP;130ohm,5%,1/10W,TP,1608	1	SA
....4	DR205	2007-000372	R-CHIP;130ohm,5%,1/10W,TP,1608	1	SA
....4	DR132	2007-000539	R-CHIP;200ohm,5%,1/10W,TP,1608	1	SA
....4	DR133	2007-000539	R-CHIP;200ohm,5%,1/10W,TP,1608	1	SA
....4	DR134	2007-000539	R-CHIP;200ohm,5%,1/10W,TP,1608	1	SA
....4	DR135	2007-000539	R-CHIP;200ohm,5%,1/10W,TP,1608	1	SA
....4	DR167	2007-000539	R-CHIP;200ohm,5%,1/10W,TP,1608	1	SA
....4	DR800	2007-000763	R-CHIP;330ohm,1%,1/10W,TP,1608	1	SA
....4	DR801	2007-000763	R-CHIP;330ohm,1%,1/10W,TP,1608	1	SA
....4	DR802	2007-000763	R-CHIP;330ohm,1%,1/10W,TP,1608	1	SA
....4	DR803	2007-000763	R-CHIP;330ohm,1%,1/10W,TP,1608	1	SA
....4	DR804	2007-000763	R-CHIP;330ohm,1%,1/10W,TP,1608	1	SA
....4	DR805	2007-000763	R-CHIP;330ohm,1%,1/10W,TP,1608	1	SA
....4	DR806	2007-000763	R-CHIP;330ohm,1%,1/10W,TP,1608	1	SA
....4	DR807	2007-000763	R-CHIP;330ohm,1%,1/10W,TP,1608	1	SA
....4	DR420	2007-001167	R-CHIP;75ohm,5%,1/10W,TP,1608	1	SA
....4	DR421	2007-001167	R-CHIP;75ohm,5%,1/10W,TP,1608	1	SA
....4	DRA103	2011-001011	R-NET;10Kohm,5%,1/16W,L,CHIP,8P,TP,3.2x1	1	SA
....4	DRA401	2011-001011	R-NET;10Kohm,5%,1/16W,L,CHIP,8P,TP,3.2x1	1	SA
....4	DRA108	2011-001410	R-NET;120OHM,5%,1/16W,L,CHIP,8P,TP,3.2X1	1	SA
....4	DRA109	2011-001410	R-NET;120OHM,5%,1/16W,L,CHIP,8P,TP,3.2X1	1	SA
....4	DRA110	2011-001410	R-NET;120OHM,5%,1/16W,L,CHIP,8P,TP,3.2X1	1	SA
....4	DRA111	2011-001410	R-NET;120OHM,5%,1/16W,L,CHIP,8P,TP,3.2X1	1	SA
....4	DRA112	2011-001410	R-NET;120OHM,5%,1/16W,L,CHIP,8P,TP,3.2X1	1	SA
....4	DRA113	2011-001410	R-NET;120OHM,5%,1/16W,L,CHIP,8P,TP,3.2X1	1	SA
....4	DRA114	2011-001410	R-NET;120OHM,5%,1/16W,L,CHIP,8P,TP,3.2X1	1	SA
....4	DRA115	2011-001410	R-NET;120OHM,5%,1/16W,L,CHIP,8P,TP,3.2X1	1	SA
....4	DRA116	2011-001410	R-NET;120OHM,5%,1/16W,L,CHIP,8P,TP,3.2X1	1	SA

ELECTRONIC SERVICE TIRGOVISTE

Level	Loc. No.	Code No.	Description & Specification	Q'ty	SA/SNA
....4	DRA117	2011-001410	R-NET;120OHM,5%,1/16W,L,CHIP,8P,TP,3.2X1	1	SA
....4	DRA118	2011-001410	R-NET;120OHM,5%,1/16W,L,CHIP,8P,TP,3.2X1	1	SA
....4	DRA119	2011-001410	R-NET;120OHM,5%,1/16W,L,CHIP,8P,TP,3.2X1	1	SA
....4	DRA120	2011-001410	R-NET;120OHM,5%,1/16W,L,CHIP,8P,TP,3.2X1	1	SA
....4	DRA121	2011-001410	R-NET;120OHM,5%,1/16W,L,CHIP,8P,TP,3.2X1	1	SA
....4	DRA122	2011-001410	R-NET;120OHM,5%,1/16W,L,CHIP,8P,TP,3.2X1	1	SA
....4	DRA123	2011-001410	R-NET;120OHM,5%,1/16W,L,CHIP,8P,TP,3.2X1	1	SA
....4	DRA124	2011-001410	R-NET;120OHM,5%,1/16W,L,CHIP,8P,TP,3.2X1	1	SA
....4	DRA125	2011-001410	R-NET;120OHM,5%,1/16W,L,CHIP,8P,TP,3.2X1	1	SA
....4	DC100	2203-000257	C-CER,CHIP;10nF,10%,50V,X7R,1608	1	SA
....4	DC102	2203-000257	C-CER,CHIP;10nF,10%,50V,X7R,1608	1	SA
....4	DC105	2203-000257	C-CER,CHIP;10nF,10%,50V,X7R,1608	1	SA
....4	DC107	2203-000257	C-CER,CHIP;10nF,10%,50V,X7R,1608	1	SA
....4	DC109	2203-000257	C-CER,CHIP;10nF,10%,50V,X7R,1608	1	SA
....4	DC111	2203-000257	C-CER,CHIP;10nF,10%,50V,X7R,1608	1	SA
....4	DC112	2203-000257	C-CER,CHIP;10nF,10%,50V,X7R,1608	1	SA
....4	DC114	2203-000257	C-CER,CHIP;10nF,10%,50V,X7R,1608	1	SA
....4	DC116	2203-000257	C-CER,CHIP;10nF,10%,50V,X7R,1608	1	SA
....4	DC118	2203-000257	C-CER,CHIP;10nF,10%,50V,X7R,1608	1	SA
....4	DC801	2203-000659	C-CER,CHIP;0.27nF,5%,50V,C0G,1608	1	SA
....4	DC804	2203-000659	C-CER,CHIP;0.27nF,5%,50V,C0G,1608	1	SA
....4	DC807	2203-000659	C-CER,CHIP;0.27nF,5%,50V,C0G,1608	1	SA
....4	DC810	2203-000659	C-CER,CHIP;0.27nF,5%,50V,C0G,1608	1	SA
....4	DC155	2203-001630	C-CER,CHIP;330nF,+80-20%,16V,Y5V,1608	1	SA
....4	DC700	2203-001630	C-CER,CHIP;330nF,+80-20%,16V,Y5V,1608	1	SA
....4	DC701	2203-001630	C-CER,CHIP;330nF,+80-20%,16V,Y5V,1608	1	SA
....4	DC101	2203-005005	C-CER,CHIP;100nF,10%,16V,X7R,1608	1	SA
....4	DC103	2203-005005	C-CER,CHIP;100nF,10%,16V,X7R,1608	1	SA
....4	DC104	2203-005005	C-CER,CHIP;100nF,10%,16V,X7R,1608	1	SA
....4	DC106	2203-005005	C-CER,CHIP;100nF,10%,16V,X7R,1608	1	SA
....4	DC108	2203-005005	C-CER,CHIP;100nF,10%,16V,X7R,1608	1	SA
....4	DC110	2203-005005	C-CER,CHIP;100nF,10%,16V,X7R,1608	1	SA
....4	DC113	2203-005005	C-CER,CHIP;100nF,10%,16V,X7R,1608	1	SA
....4	DC115	2203-005005	C-CER,CHIP;100nF,10%,16V,X7R,1608	1	SA
....4	DC117	2203-005005	C-CER,CHIP;100nF,10%,16V,X7R,1608	1	SA
....4	DC119	2203-005005	C-CER,CHIP;100nF,10%,16V,X7R,1608	1	SA
....4	DC120	2203-005005	C-CER,CHIP;100nF,10%,16V,X7R,1608	1	SA
....4	DC126	2203-005005	C-CER,CHIP;100nF,10%,16V,X7R,1608	1	SA
....4	DC127	2203-005005	C-CER,CHIP;100nF,10%,16V,X7R,1608	1	SA
....4	DC128	2203-005005	C-CER,CHIP;100nF,10%,16V,X7R,1608	1	SA
....4	DC129	2203-005005	C-CER,CHIP;100nF,10%,16V,X7R,1608	1	SA
....4	DC130	2203-005005	C-CER,CHIP;100nF,10%,16V,X7R,1608	1	SA
....4	DC131	2203-005005	C-CER,CHIP;100nF,10%,16V,X7R,1608	1	SA
....4	DC132	2203-005005	C-CER,CHIP;100nF,10%,16V,X7R,1608	1	SA
....4	DC133	2203-005005	C-CER,CHIP;100nF,10%,16V,X7R,1608	1	SA
....4	DC134	2203-005005	C-CER,CHIP;100nF,10%,16V,X7R,1608	1	SA
....4	DC135	2203-005005	C-CER,CHIP;100nF,10%,16V,X7R,1608	1	SA
....4	DC136	2203-005005	C-CER,CHIP;100nF,10%,16V,X7R,1608	1	SA
....4	DC137	2203-005005	C-CER,CHIP;100nF,10%,16V,X7R,1608	1	SA
....4	DC138	2203-005005	C-CER,CHIP;100nF,10%,16V,X7R,1608	1	SA
....4	DC139	2203-005005	C-CER,CHIP;100nF,10%,16V,X7R,1608	1	SA
....4	DC140	2203-005005	C-CER,CHIP;100nF,10%,16V,X7R,1608	1	SA
....4	DC141	2203-005005	C-CER,CHIP;100nF,10%,16V,X7R,1608	1	SA
....4	DC142	2203-005005	C-CER,CHIP;100nF,10%,16V,X7R,1608	1	SA
....4	DC143	2203-005005	C-CER,CHIP;100nF,10%,16V,X7R,1608	1	SA
....4	DC144	2203-005005	C-CER,CHIP;100nF,10%,16V,X7R,1608	1	SA
....4	DC145	2203-005005	C-CER,CHIP;100nF,10%,16V,X7R,1608	1	SA
....4	DC146	2203-005005	C-CER,CHIP;100nF,10%,16V,X7R,1608	1	SA
....4	DC147	2203-005005	C-CER,CHIP;100nF,10%,16V,X7R,1608	1	SA
....4	DC148	2203-005005	C-CER,CHIP;100nF,10%,16V,X7R,1608	1	SA

ELECTRONIC SERVICE TIRGOVISTE

Level	Loc. No.	Code No.	Description & Specification	Q'ty	SA/SNA
....4	DC149	2203-005005	C-CER,CHIP;100nF,10%,16V,X7R,1608	1	SA
....4	DC150	2203-005005	C-CER,CHIP;100nF,10%,16V,X7R,1608	1	SA
....4	DC151	2203-005005	C-CER,CHIP;100nF,10%,16V,X7R,1608	1	SA
....4	DC152	2203-005005	C-CER,CHIP;100nF,10%,16V,X7R,1608	1	SA
....4	DC153	2203-005005	C-CER,CHIP;100nF,10%,16V,X7R,1608	1	SA
....4	DC203	2203-005005	C-CER,CHIP;100nF,10%,16V,X7R,1608	1	SA
....4	DC400	2203-005005	C-CER,CHIP;100nF,10%,16V,X7R,1608	1	SA
....4	DC401	2203-005005	C-CER,CHIP;100nF,10%,16V,X7R,1608	1	SA
....4	DC402	2203-005005	C-CER,CHIP;100nF,10%,16V,X7R,1608	1	SA
....4	DC403	2203-005005	C-CER,CHIP;100nF,10%,16V,X7R,1608	1	SA
....4	DC404	2203-005005	C-CER,CHIP;100nF,10%,16V,X7R,1608	1	SA
....4	DC500	2203-005005	C-CER,CHIP;100nF,10%,16V,X7R,1608	1	SA
....4	DC501	2203-005005	C-CER,CHIP;100nF,10%,16V,X7R,1608	1	SA
....4	DC502	2203-005005	C-CER,CHIP;100nF,10%,16V,X7R,1608	1	SA
....4	DC503	2203-005005	C-CER,CHIP;100nF,10%,16V,X7R,1608	1	SA
....4	DC504	2203-005005	C-CER,CHIP;100nF,10%,16V,X7R,1608	1	SA
....4	DC505	2203-005005	C-CER,CHIP;100nF,10%,16V,X7R,1608	1	SA
....4	DC506	2203-005005	C-CER,CHIP;100nF,10%,16V,X7R,1608	1	SA
....4	DC507	2203-005005	C-CER,CHIP;100nF,10%,16V,X7R,1608	1	SA
....4	DC508	2203-005005	C-CER,CHIP;100nF,10%,16V,X7R,1608	1	SA
....4	DC509	2203-005005	C-CER,CHIP;100nF,10%,16V,X7R,1608	1	SA
....4	DC510	2203-005005	C-CER,CHIP;100nF,10%,16V,X7R,1608	1	SA
....4	DC511	2203-005005	C-CER,CHIP;100nF,10%,16V,X7R,1608	1	SA
....4	DC512	2203-005005	C-CER,CHIP;100nF,10%,16V,X7R,1608	1	SA
....4	DC513	2203-005005	C-CER,CHIP;100nF,10%,16V,X7R,1608	1	SA
....4	DC514	2203-005005	C-CER,CHIP;100nF,10%,16V,X7R,1608	1	SA
....4	DC601	2203-005005	C-CER,CHIP;100nF,10%,16V,X7R,1608	1	SA
....4	DC612	2203-005005	C-CER,CHIP;100nF,10%,16V,X7R,1608	1	SA
....4	DC614	2203-005005	C-CER,CHIP;100nF,10%,16V,X7R,1608	1	SA
....4	DC631	2203-005005	C-CER,CHIP;100nF,10%,16V,X7R,1608	1	SA
....4	DC632	2203-005005	C-CER,CHIP;100nF,10%,16V,X7R,1608	1	SA
....4	DC633	2203-005005	C-CER,CHIP;100nF,10%,16V,X7R,1608	1	SA
....4	DC902	2203-005005	C-CER,CHIP;100nF,10%,16V,X7R,1608	1	SA
....4	DC903	2203-005005	C-CER,CHIP;100nF,10%,16V,X7R,1608	1	SA
....4	DC905	2203-005005	C-CER,CHIP;100nF,10%,16V,X7R,1608	1	SA
....4	DC906	2203-005005	C-CER,CHIP;100nF,10%,16V,X7R,1608	1	SA
....4	DC907	2203-005005	C-CER,CHIP;100nF,10%,16V,X7R,1608	1	SA
....4	DC909	2203-005005	C-CER,CHIP;100nF,10%,16V,X7R,1608	1	SA
....4	DC910	2203-005005	C-CER,CHIP;100nF,10%,16V,X7R,1608	1	SA
....4	DC915	2203-005005	C-CER,CHIP;100nF,10%,16V,X7R,1608	1	SA
....4	DC916	2203-005005	C-CER,CHIP;100nF,10%,16V,X7R,1608	1	SA
....4	DC921	2203-005005	C-CER,CHIP;100nF,10%,16V,X7R,1608	1	SA
....4	DC922	2203-005005	C-CER,CHIP;100nF,10%,16V,X7R,1608	1	SA
....4	DC9906	2203-005005	C-CER,CHIP;100nF,10%,16V,X7R,1608	1	SA
....4	DC121	2402-000108	C-AL,SMD;10uF,20%,16V,WT,TP,4.3x4.3x5.2m	1	SA
....4	DC122	2402-000108	C-AL,SMD;10uF,20%,16V,WT,TP,4.3x4.3x5.2m	1	SA
....4	DC123	2402-000108	C-AL,SMD;10uF,20%,16V,WT,TP,4.3x4.3x5.2m	1	SA
....4	DC124	2402-000108	C-AL,SMD;10uF,20%,16V,WT,TP,4.3x4.3x5.2m	1	SA
....4	DC125	2402-000108	C-AL,SMD;10uF,20%,16V,WT,TP,4.3x4.3x5.2m	1	SA
....4	DC602	2402-000108	C-AL,SMD;10uF,20%,16V,WT,TP,4.3x4.3x5.2m	1	SA
....4	DC154	2402-001128	C-AL,SMD;100UF,20%,16V,WT,TP,6.3X5.7MM	1	SA
....4	DC522	2402-001128	C-AL,SMD;100UF,20%,16V,WT,TP,6.3X5.7MM	1	SA
....4	DC611	2402-001128	C-AL,SMD;100UF,20%,16V,WT,TP,6.3X5.7MM	1	SA
....4	DC634	2402-001128	C-AL,SMD;100UF,20%,16V,WT,TP,6.3X5.7MM	1	SA
....4	DC901	2402-001128	C-AL,SMD;100UF,20%,16V,WT,TP,6.3X5.7MM	1	SA
....4	DC904	2402-001128	C-AL,SMD;100UF,20%,16V,WT,TP,6.3X5.7MM	1	SA
....4	DC635	2402-001158	C-AL,SMD;1UF,20%,50V,WT,TP,4X5.2MM	1	SA
....4	DC636	2402-001158	C-AL,SMD;1UF,20%,50V,WT,TP,4X5.2MM	1	SA
....4	DC637	2402-001159	C-AL,SMD;3.3UF,20%,50V,WT,TP,4X5.2MM	1	SA
....4	DC638	2402-001159	C-AL,SMD;3.3UF,20%,50V,WT,TP,4X5.2MM	1	SA

ELECTRONIC SERVICE TIRGOVISTE

Level	Loc. No.	Code No.	Description & Specification	Q'ty	SA/SNA
....4	DC202	2402-001216	C-AL,SMD;470uF,20%,16V,WT,TP,10.3x10.3x1	1	SA
....4	DC613	2402-001216	C-AL,SMD;470uF,20%,16V,WT,TP,10.3x10.3x1	1	SA
....4	T0052	2703-000125	INDUCTOR-SMD;10uH,10%,2012	1	SA
....4	T0052	2703-000125	INDUCTOR-SMD;10uH,10%,2012	1	SA
....4	T0052	2703-000125	INDUCTOR-SMD;10uH,10%,2012	1	SA
....4	T0052	2703-000125	INDUCTOR-SMD;10uH,10%,2012	1	SA
....4	DX601	2806-001308	OSCILLATOR-VCXO;27MHZ,-,30PF,TP,3.3V,50M	1	SA
....4	T0568	3301-001569	BEAD-SMD;600ohm,2012,1000mA,TP,520ohm/90	1	SNA
....4	T0568	3301-001569	BEAD-SMD;600ohm,2012,1000mA,TP,520ohm/90	1	SNA
....4	T0568	3301-001569	BEAD-SMD;600ohm,2012,1000mA,TP,520ohm/90	1	SNA
....4	T0568	3301-001569	BEAD-SMD;600ohm,2012,1000mA,TP,520ohm/90	1	SNA
....4	T0568	3301-001569	BEAD-SMD;600ohm,2012,1000mA,TP,520ohm/90	1	SNA
....4	T0568	3301-001569	BEAD-SMD;600ohm,2012,1000mA,TP,520ohm/90	1	SNA
....4	T0568	3301-001569	BEAD-SMD;600ohm,2012,1000mA,TP,520ohm/90	1	SNA
....4	T0568	3301-001569	BEAD-SMD;600ohm,2012,1000mA,TP,520ohm/90	1	SNA
....4	MP1.1	BN41-00684A	PCB-DIGITAL B/D;BORDEAUX,FR-4,6L,1.0,1.6	1	SNA
....4	M0018	BN97-00805L	ASSY MICOM;T-XXXX-XXXX,DTV MODULE,XEF,20	1	SA
.....5	IC115	1107-001475	IC-FLASH MEMORY;29LV320,32MBIT,4MX8/2MX1	1	SA
....4	IC104	0801-002172	IC-CMOS LOGIC;74LCX16244,BUFFER/LINE DRI	1	SA
....4	T0087	1203-003704	IC-POSI.FIXED REG.;G953-18T6U,SOT-223,3P	1	SA
1	T0852	BN91-01017B	ASSY LCD-SPZ;LE40R71BX/*	1	SNA
..2	M0215	BN07-00264A	LCD-PANEL;LTA400WT-L01,8bit,952*551*51.0	1	SA
1	M0045	BN92-01661N	ASSY ACCESSORY;LE40R73BDX/XEF	1	SNA
..2	M0045	BN96-02984N	ASSY ACCESSORY;LE40R73BDX/XEF	1	SA
...3	T0268	3903-000145	CBF-POWER CORD;DT,EU,FP3/YES,U(IEC C13-R	1	SA
...3	T0524	6902-000110	BAG PE;LDPE,T0.05,W250,L400,TRP,28,2	2	SNA
...3	ACCESSORY	AA68-03242E	MANUAL FLYER-01,SAFETY GUIDE;All Model,S	1	SNA
...3	ACCESSORY	AA68-03575C	MANUAL FLYER-01,REGISTRATION C;XEF,FRENC	1	SNA
...3	T0074	BN59-00516A	REMOCON;CAMBRIDGE,TM87B,45,CAMBRIDGE,EUR	1	SA
...3	ACCESSORY	BN63-01798A	CLOTH-CLEAN;RE40**,CLOTH,310,320,RHCM	1	SA
...3	T0531	BN63-02366A	COVER-BOTTOM;40R71,ABS+PMMA,HB,BK23,H/GL	1	SNA
...3	ACCESSORY	BN68-00514A	MANUAL FLYER-04,WARRANTY CARD;PDP/LCD TV	1	SNA
...3	T0059	BN68-00895A	MANUAL FLYER-CARD;COMM,SAMSUNG,W/P 5G,PR	1	SNA
...3	T0059	BN68-00907A	MANUAL FLYER-CARD;COMM,SAMSUNG,18 LANG,E	1	SNA
...3	T0511	BN68-01007C	MANUAL USERS;COMM,SAMSUNG,Eng/Fre,France	1	SNA
...3		BN69-01052A	BOX ACCESSORY-00;ALL,CB-SW1,YEL,W603,D67	1	SA
1	M0113	BN92-01665A	ASSY P/MATERIAL;40R71,BORDEAUX	1	SNA
..2	T0376	6902-000061	BAG AIR;LDPE,T0.2,L1000,W500,TRP,,,	0.05	SNA
..2	T0376	6902-000379	BAG AIR;LDPE,T0.2,W1000,L1800,TRP,-,--	0.015	SNA
..2		6902-000604	BAG WRAPPING;LDPE,T0.02,W500,L10000,TRP,	13.44	SNA
..2	T0524	6902-000524	BAG PE;HDPE/NITRON(DOUBLE),T0.015/T0.5(D	1	SNA
1	M0003	BN92-01707C	ASSY BOX;40R74,EO(XEF,XEG),CAMBRIDGE-2	1	SNA
..2		BN69-01346C	BOX-01,SET;40R74,DY-01,A,YEL,A1,IDTV(GER	1.02	SNA
1	M0112	BN91-01008L	ASSY SHIELD;40R74,AMLCD	1	SNA
..2	M0081	6003-000115	SCREW-TAPTITE;BH,+,B,M3,L6,ZPC(BLK),SWRC	2	SNA
..2	M0081	6003-000115	SCREW-TAPTITE;BH,+,B,M3,L6,ZPC(BLK),SWRC	4	SNA
..2	M0081	6003-000115	SCREW-TAPTITE;BH,+,B,M3,L6,ZPC(BLK),SWRC	4	SNA
..2	M0081	6003-000115	SCREW-TAPTITE;BH,+,B,M3,L6,ZPC(BLK),SWRC	3	SNA
..2	M0081	6003-000115	SCREW-TAPTITE;BH,+,B,M3,L6,ZPC(BLK),SWRC	2	SNA
..2	M0081	6003-000115	SCREW-TAPTITE;BH,+,B,M3,L6,ZPC(BLK),SWRC	1	SNA
..2	M0081	6003-001003	SCREW-TAPTITE;BH,+,B,M4,L12,ZPC(BLK),SWR	2	SNA
..2	M0081	6003-001003	SCREW-TAPTITE;BH,+,B,M4,L12,ZPC(BLK),SWR	2	SNA
..2	M0081	6003-001003	SCREW-TAPTITE;BH,+,B,M4,L12,ZPC(BLK),SWR	9	SNA
..2	M0081	6003-001003	SCREW-TAPTITE;BH,+,B,M4,L12,ZPC(BLK),SWR	2	SNA
..2	M0081	6003-001003	SCREW-TAPTITE;BH,+,B,M4,L12,ZPC(BLK),SWR	1	SNA

ELECTRONIC SERVICE TIRGOVISTE

Level	Loc. No.	Code No.	Description & Specification	Q'ty	SA/SNA
..2	M0081	6003-001003	SCREW-TAPTITE;BH,+,B,M4,L12,ZPC(BLK),SWR	1	SNA
..2	CCM1	6006-000245	SCREW-MACHINE;WSP,PH,+,M4,L8,ZPC(YEL),SW	5	SNA
..2	CCM1	6006-000245	SCREW-MACHINE;WSP,PH,+,M4,L8,ZPC(YEL),SW	1	SNA
..2	M2893	BH39-00362G	LEAD CONNECTOR;SONOMA,UL1007#26,5PIN,100	1	SA
..2	T0076	BN39-00615D	CBF HARNESS;BORDEAUX,1617#22,3P,1P,RING,	1	SA
..2	M2893	BN39-00691B	LEAD CONNECTOR;LE32R71BX,UL1007#26,16P,1	1	SA
..2	M2893	BN39-00712C	LEAD CONNECTOR-LVDS;Bordeaux,UL1571#30,3	1	SA
..2	M2893	BN39-00716B	LEAD CONNECTOR;LE40R71BX/XEC,UL3239#24,2	1	SA
..2	M2893	BN39-00717A	LEAD CONNECTOR;LE32R71BX/XEC,UL3443#28,5	1	SA
..2	M0174	BN44-00134A	IP BOARD;SIP40,LE40R71B,2.0~3.0mA,6.0~7.	1	SA
..2		BN61-02256B	BRACKET-PANEL SIDE;Bordeaux 40,SECC,T1.2	1	SA
..2		BN61-02257B	BRACKET-PANEL SIDE;Bordeaux 40,SECC,T1.2	1	SA
..2		BN61-02258A	BRACKET-STAND LINK;Bordeaux 40,SECC,T1.6	1	SA
..2	M0114	BN61-02500A	HOLDER-WIRE;NYLON6.6,NATURAL	2	SA
..2	M0146	BN63-02462A	SHIELD CASE;CAMBRIDGE 32,SECC,T0.8,UK	1	SA
..2		BN96-03056A	ASSY BOARD P-HOLDER AV;40R71,EO,ABS+PMMA	1	SNA
...3		BN61-02250A	HOLDER-SIDE AV;40R71,EO,KO,SO,ABS+PMMA,H	1	SA
...3	T0578	BN64-00454A	INLAY AV;BORDEAUX,PS SHEET,T0.3,-,-,-,EO	1	SNA
...3	M0020	BN96-02439A	ASSY BOARD P-SUB AV SIDE;MILANO,CT5000-3	1	SA
...3	M2893	BN39-00672A	LEAD CONNECTOR;LNR329DX/XAA,UL2835#28,UL	1	SA
..2	T0447	BN96-03442B	ASSY BRACKET P-PANEL;CAMBRIDGE40,SECC,AM	1	SNA
...3	M0081	6003-000115	SCREW-TAPTITE;BH,+,B,M3,L6,ZPC(BLK),SWRC	2	SNA
...3	M0081	6003-000115	SCREW-TAPTITE;BH,+,B,M3,L6,ZPC(BLK),SWRC	2	SNA
...3	M0146	BN61-02251B	BRACKET-PANEL TOP;Bordeaux 40,SECC,T1.2	1	SA
...3		BN61-02252B	BRACKET-PANEL BOTTOM;Bordeaux 40,SECC,T1	1	SA
...3		BN61-02253A	BRACKET-GUIDE MAIN;Bordeaux 40,SECC,T1.2	1	SA
...3		BN61-02254A	BRACKET-GUIDE POWER;Bordeaux 40,SECC,T1.	1	SA
...3		BN61-02255A	BRACKET-GUIDE POWER;Bordeaux 40,SECC,T1.	1	SA
...3	T0514	BN61-02393A	BRACKET-SUPPORT;CAMBRIDGE 32,SECC,T1.2	1	SA
...3	T0101	BN61-02427A	BRACKET-WALL;BORDEAUX 40,SECC,T1.2	1	SA
...3	M0131	AA63-01401A	GASKET;LE40R71BX,Conductive Fabric,22mm,	1	SNA
...3	M0131	AA63-01438A	GASKET;Bordeaux,Conductive Fabric,5mm,8m	1	SNA
...3	M0131	AA63-01447A	GASKET;Cambridge,Conductive Fabric,20mm,	1	SNA
..2		BN96-03590A	ASSY SHIELD P-PCB MAIN;CAMBRIDGE32,SECC	1	SNA
...3	T0603	BN63-02458A	SHIELD-PCB MAIN;CAMBRIDGE 32,SECC,T0.5,U	1	SA
...3	M0131	BN63-02627A	GASKET;Oxford,Conductive Fabric,8,13,30,	1	SA
1	M0019	BN92-01801R	ASSY LABEL;LE40R73BD,LE32R73BDX/XEF	1	SNA

ELECTRONIC SERVICE TIRGOVISTE

Memo

ELECTRONIC SERVICE
TIRGOVISTE

7 Block Diagram

- This Document can not be used without Samsung's authorization

7-1 Main Block Diagram

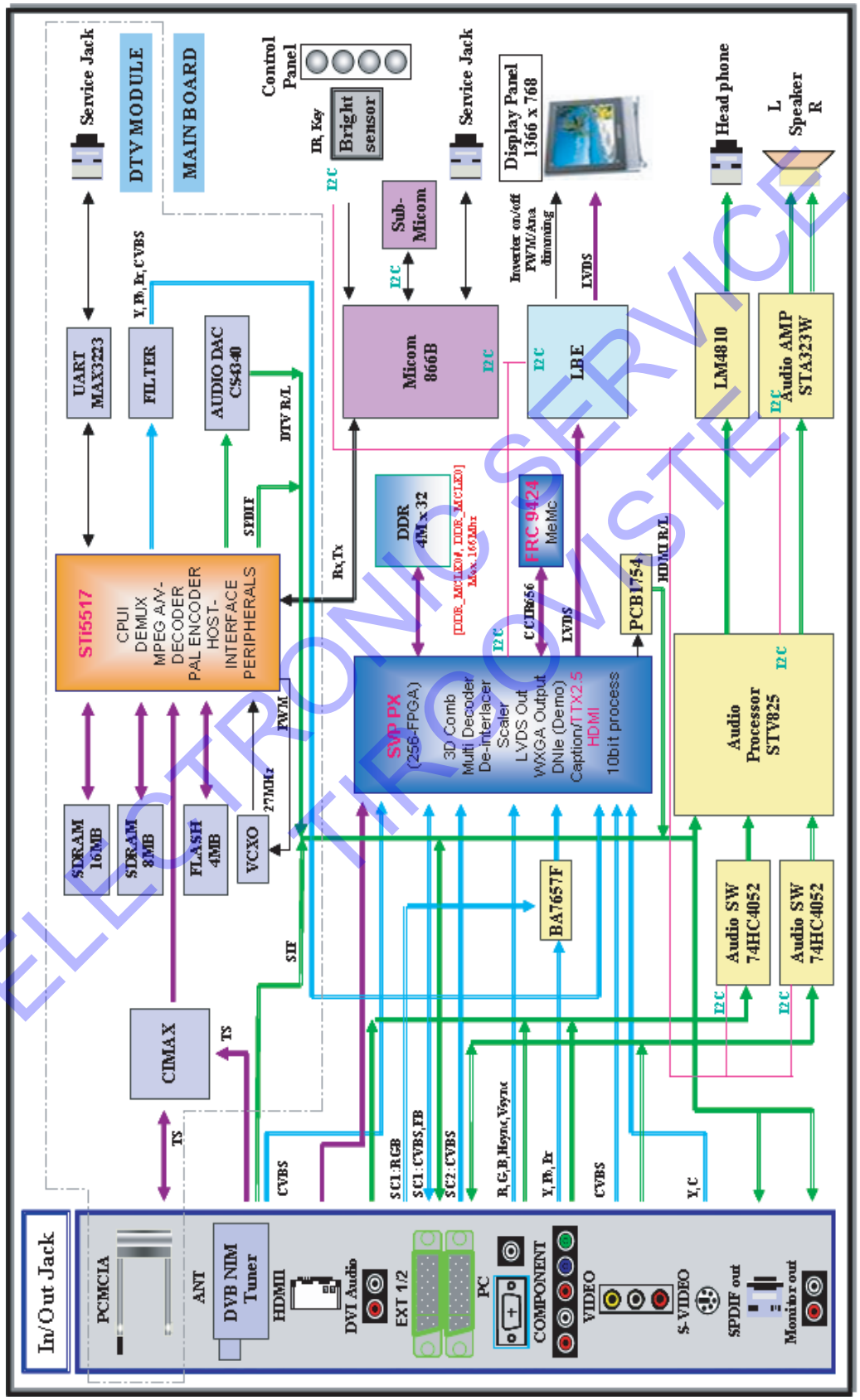

ELECTRONIC SERVICE TIRCOVISTE

7-2 DTV Block Diagram

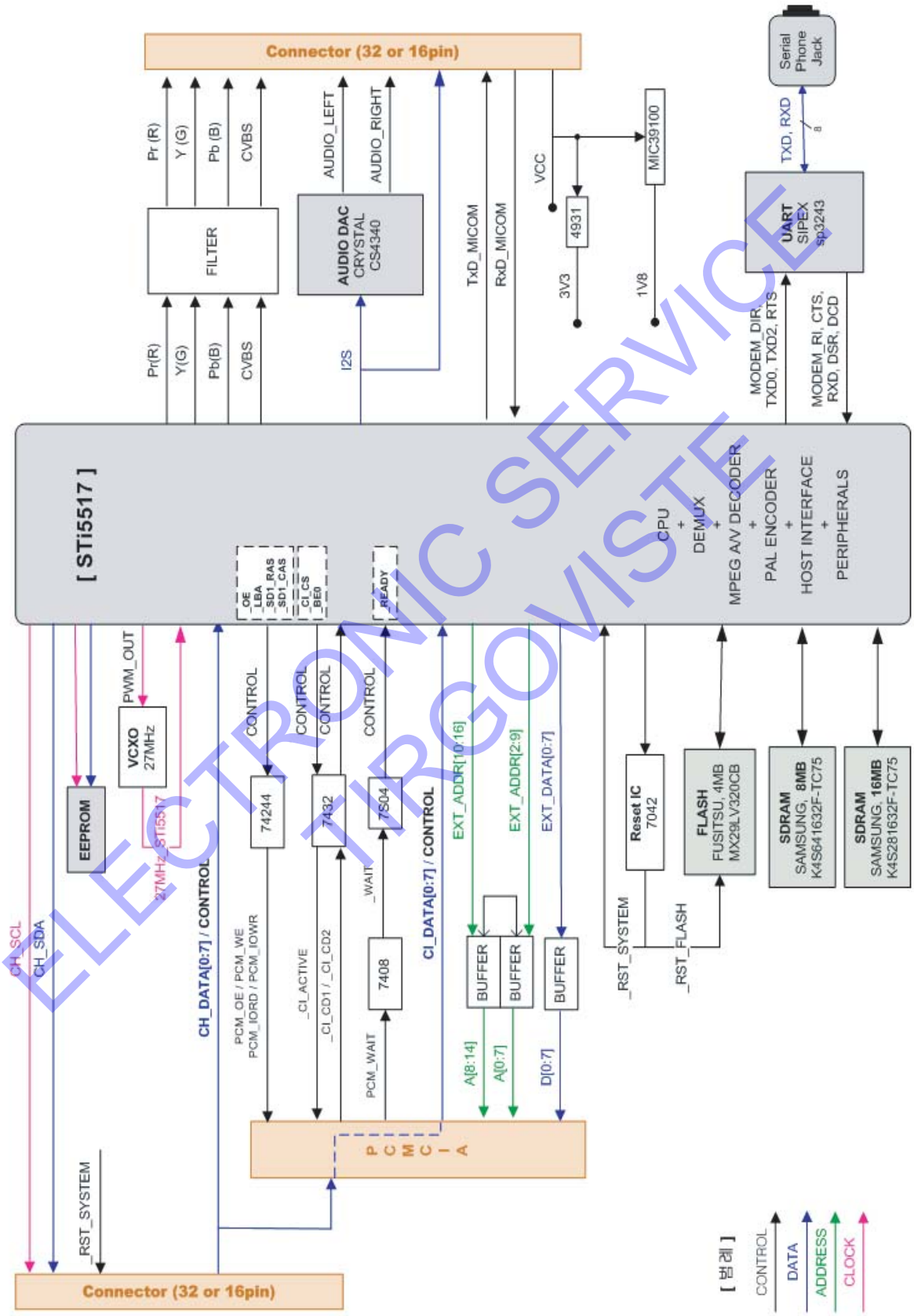

ELECTRONIC SERVICE TIRGOVISTE

7-3 DTV Block Diagram(Only for R62F)

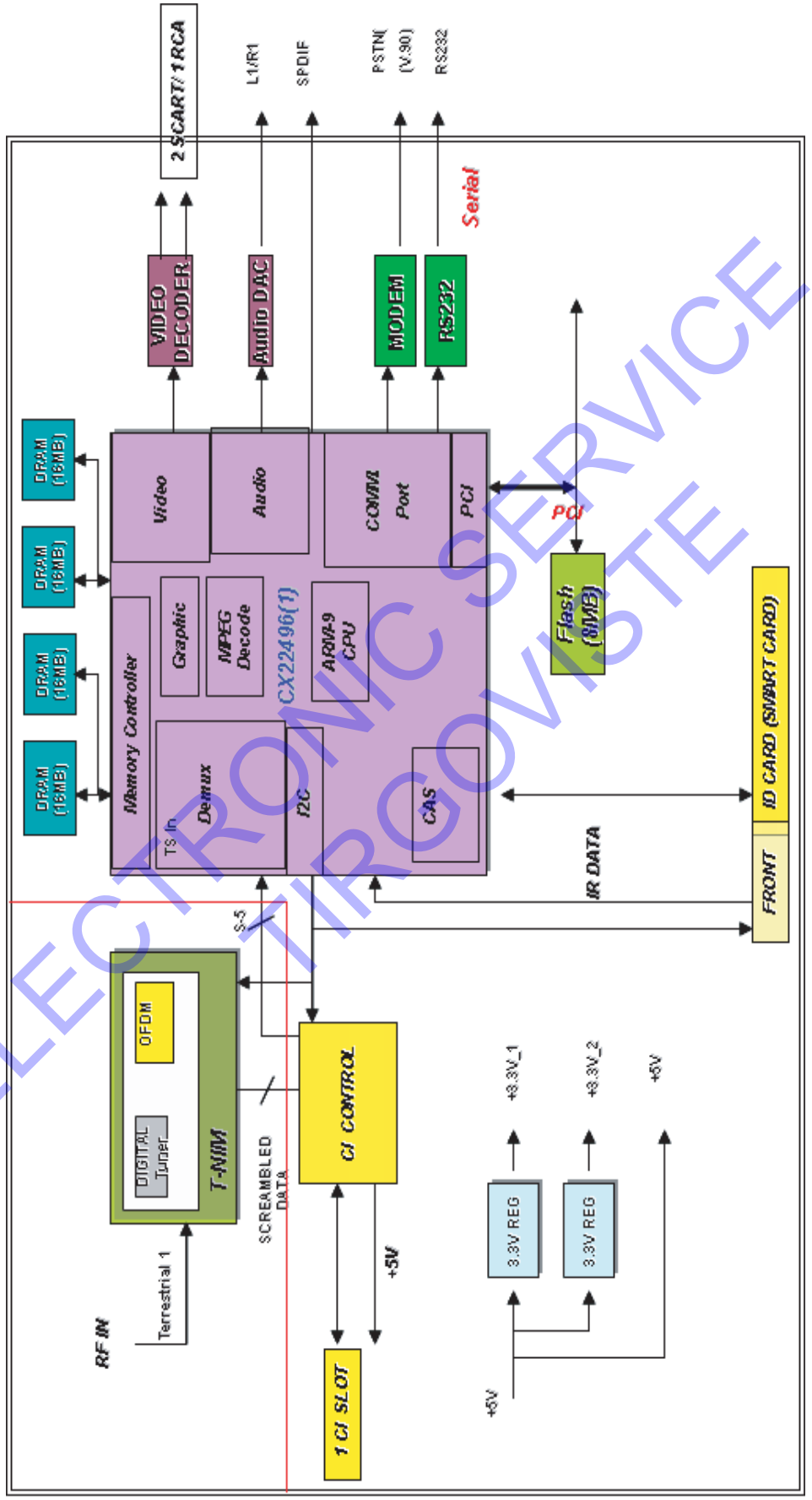

ELECTRONIC SERVICE TIRGOVISTE

7-4 DTV Power Block Diagram

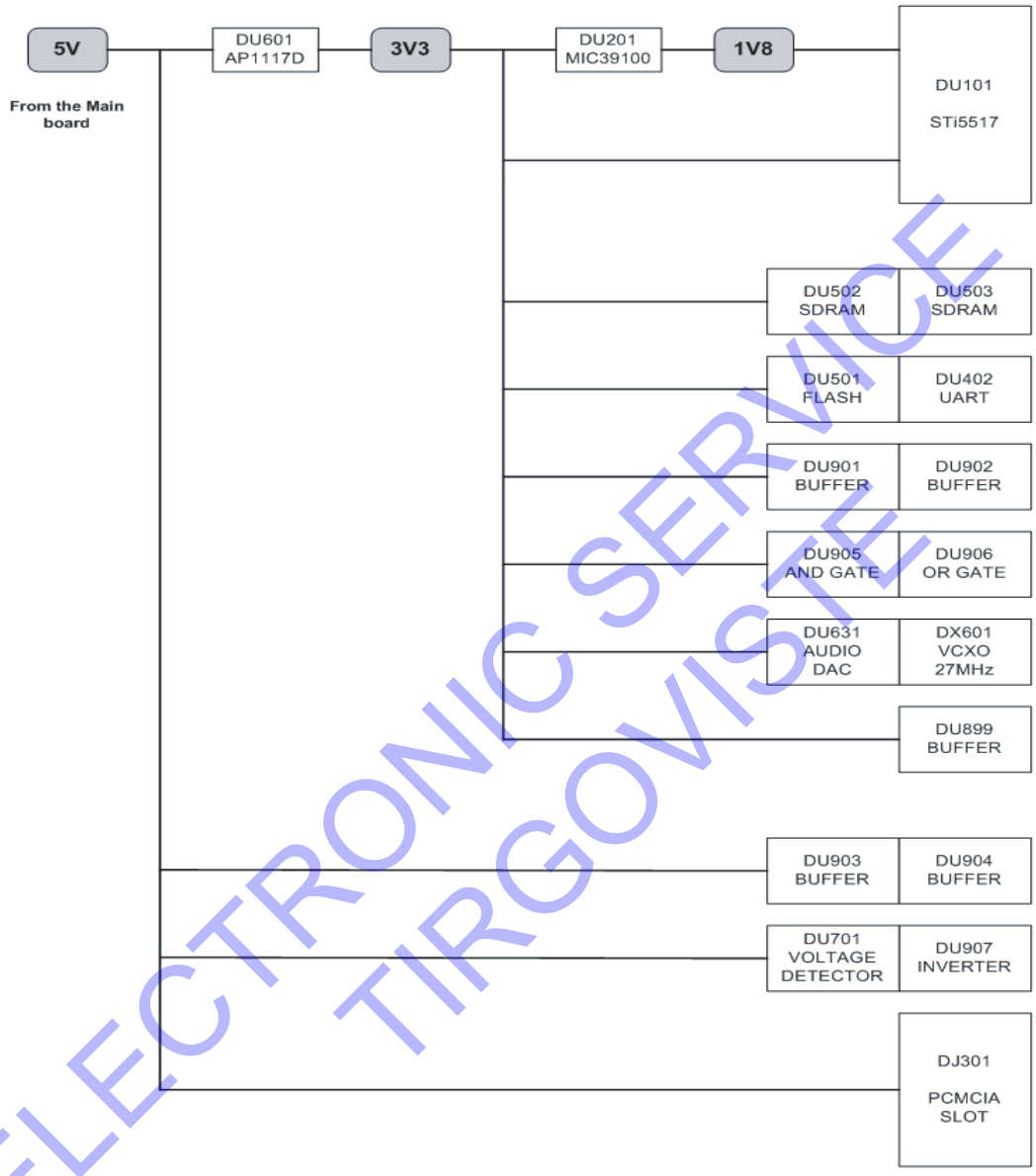

ELECTRONIC SERVICE TIRGOVISTE

8 Wiring Diagram

8-1 LE26R73BD/LE26R74BD/LE32R73BD/LE32R74BD/LE37R74BD/LE40R73BD/LE40R74BD Wiring Diagram

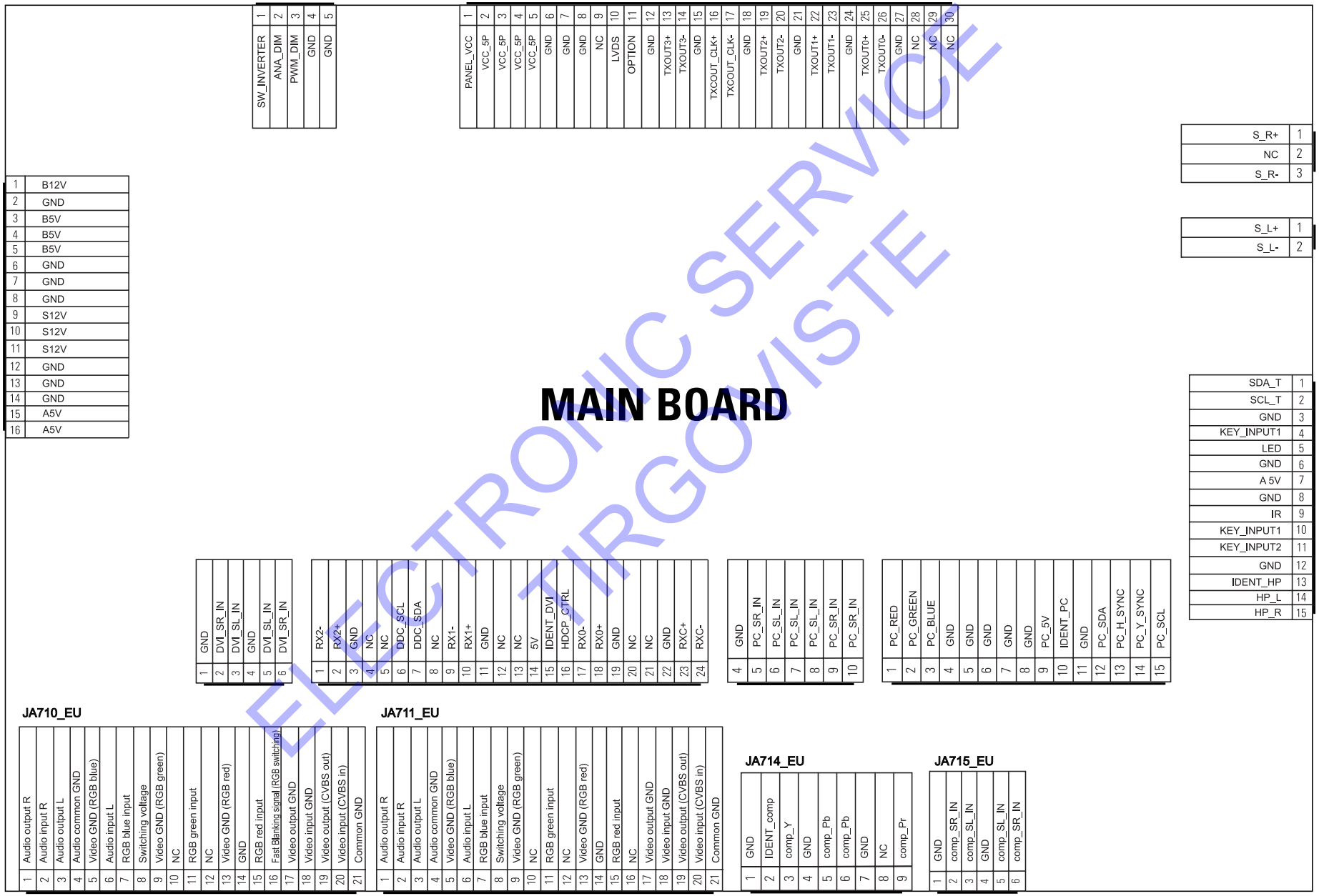

ELECTRONIC SERVICE TIRGOVISTE

8-2 Main Board Layout

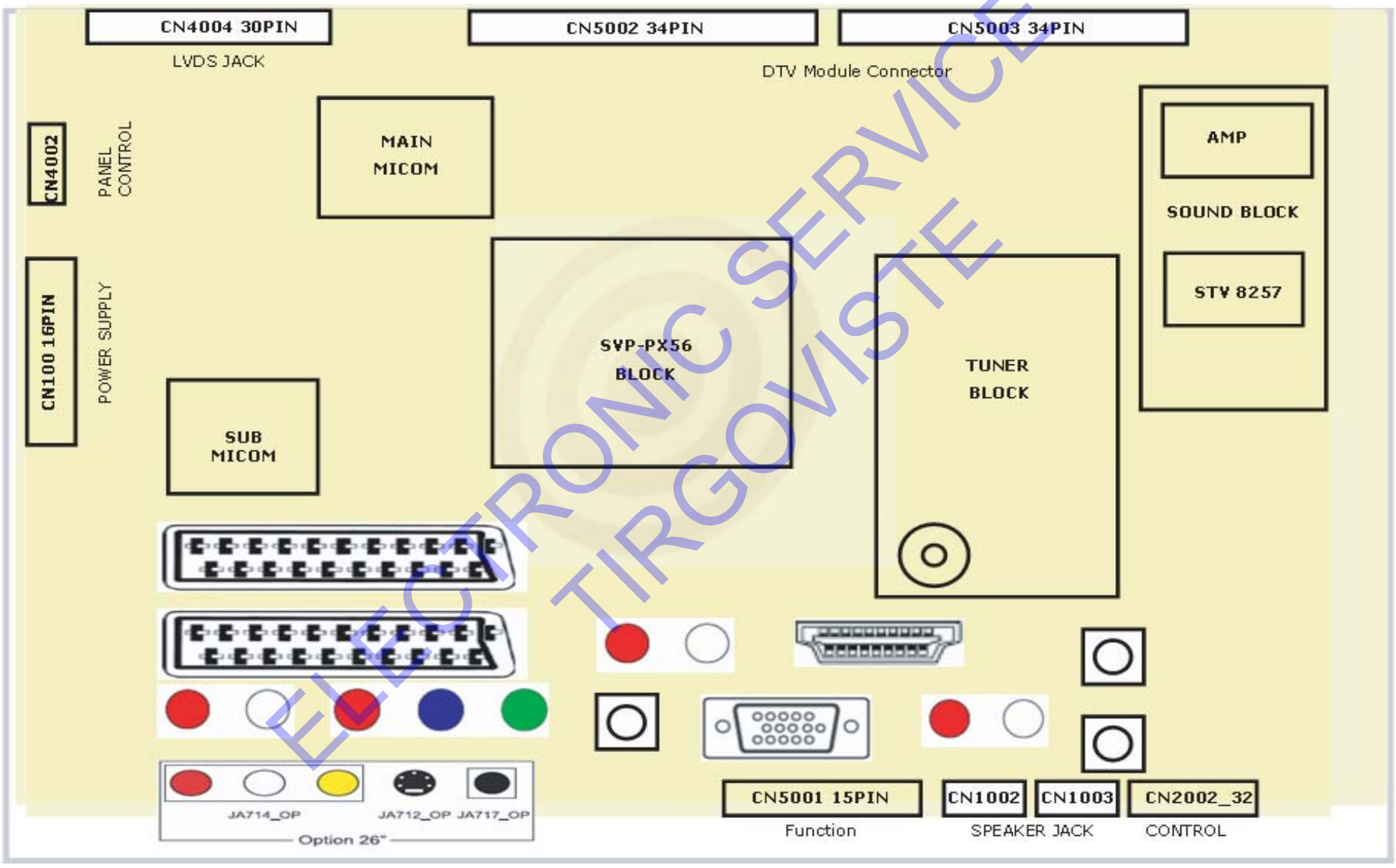

ELECTRONIC SERVICE TIRGOVISTE

8-3 PIN characteristic

CN1001 - Main Board power supply

PIN	1	2	3	4	5	6	7	8	9	10	11	12	13	14	15	16
NAME	B12V	GND	B5V	B5V	B5V	GND	GND	GND	B12VS	B12VS	B12VS	GND	GND	GND	A5V	A5V

Function Define

- 12V B5V_VCCA, B5V_VCCB, IC611 POWER SUPPERLY
- 5V B5V, B3.3V, B2.5V_VDD, B3.3VD, VCC50
- 12VS B12VS

CN1002 / CN1003 - SPEAKER CONNECTOR

PIN	1	2	3
NAME	R-OUT	NOP	R-REFERENCE

PIN	1	2
NAME	L-OUT	L-REFERENCE

ELECTRONIC SERVICE TIRGOVISTE

CN5001 - Front control

PIN	1	2	3	4	5	6	7	8	9	10	11	12	13	14	15
NAME	GND	GND	A5V	-	KEY INPUT1	KEY INPUT2	GND	-	IR	-	LED_ GREEN	LED_ LED	GND	SDA	SCL

Function Define

- A5V Front control board poewr supply
- KEY INPUT1,2/SDA/SCL Key control, from the memu, change up/down Etc.
- IR Remote control signal
- LED_GREEN/LED_RED Control the timing and stand by LED color

CN4002 - Panel control

PIN	1	2	3	4	5
NAME	SW_inverter	Ana_dimming	PWM_dimming	GND	SENSOR POWER

Function Define

- SW_inverter panel inverter control, about 5V
- Ana_dimming panel dimming control
- PWM_dimming panel PWM control, duty 40% ~ 90%
- SENSOR POWER brightness sensor power supply

ELECTRONIC SERVICE TIRGOVISTE

CN4004-LVDS Signal

PIN	NAME	PIN	NAME
1	VCC	16	TXOUTCLK+
2	VCC5P	17	TXOUTCLK-
3	VCC5P	18	GND
4	VCC5P	19	TXOUT2+
5	VCC5P	20	TXOUT2-
6	GND	21	GND
7	GND	22	TXOUT1+
8	NOP (NOT USE)	23	TXOUT1-
9	SDA1	24	GND
10	SCL1	25	TXOUT0+
11	PANEL_SYNC_EN	26	TXOUT0-
12	GND	27	GND
13	TXOUT3+	28	SW_INVERTER
14	TXOUT3-	29	ANA_DIMMING
15	GND	30	PWM_DIMMING

ELECTRONIC SERVICE TIRGOVISTE

8-4 Power Board Layout

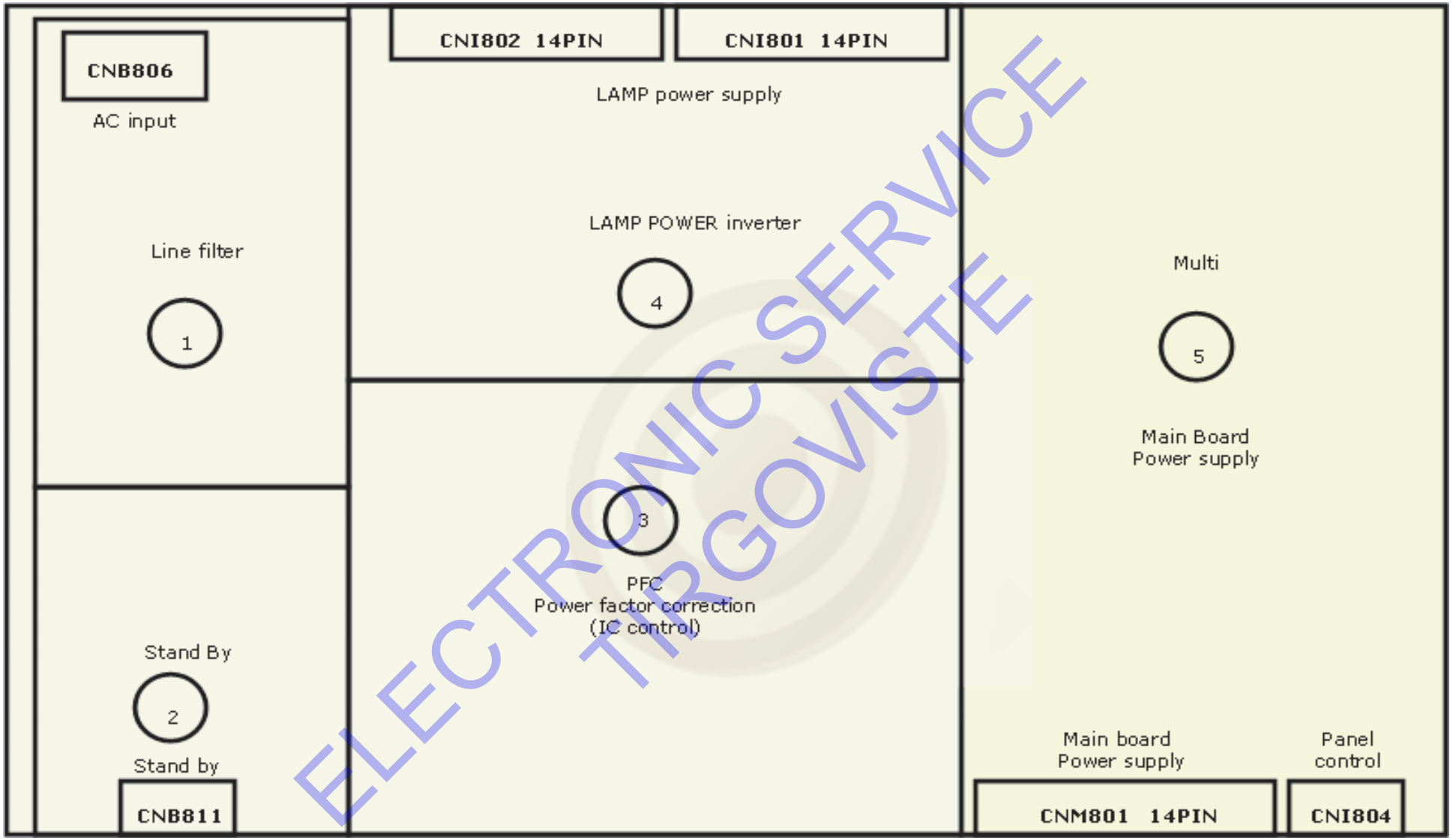

ELECTRONIC SERVICE TIRGOVISTE

CNB811 - Stand by supply

PIN	I	2	3
NAME	Live	Netural	SW_POWER
VOLTAGE	AC	AC	ON/OFF

Functing Define
- Refer to : CN802 function define

CNM801 - Main Board power supply

PIN	1	2	3	4	5	6	7	8	9	10	11	12	13	14		
NAME	12V	GND	5V	5V	5V	GND	GND	GND	12V	12V	12V	GND	GND	GND		

Functing Define
- Refer to : CN801 function define

CNM804 - Panel control

PIN	1	2	3	4	5
NAME	SW_inverter	Ana_dimming	PWM_dimming	GND	SENSOR POWER

Functing Define
- Refer to : CN815 function define

ELECTRONIC SERVICE TIRGOVISTE

CN801 - Main Board power supply

PIN	1	2	3	4	5	6	7	8	9	10	11	12	13	14
NAME	24V	24V	24V	24V	24V	GND	GND	GND	GND	GND	GND	B/L	A_D	P_D

Functing Define

- 24V LAMP INVERTER Voltage
- B/L Brightness sensor power
- A_D ANA_DIMMING
- P_D PWM_DIMMING

ELECTRONIC SERVICE TIRGOVISTE

9 Schematic Diagrams

-This Document can not be used without Samsung's authorization.

9-1 Power_Sound Schematic Diagram

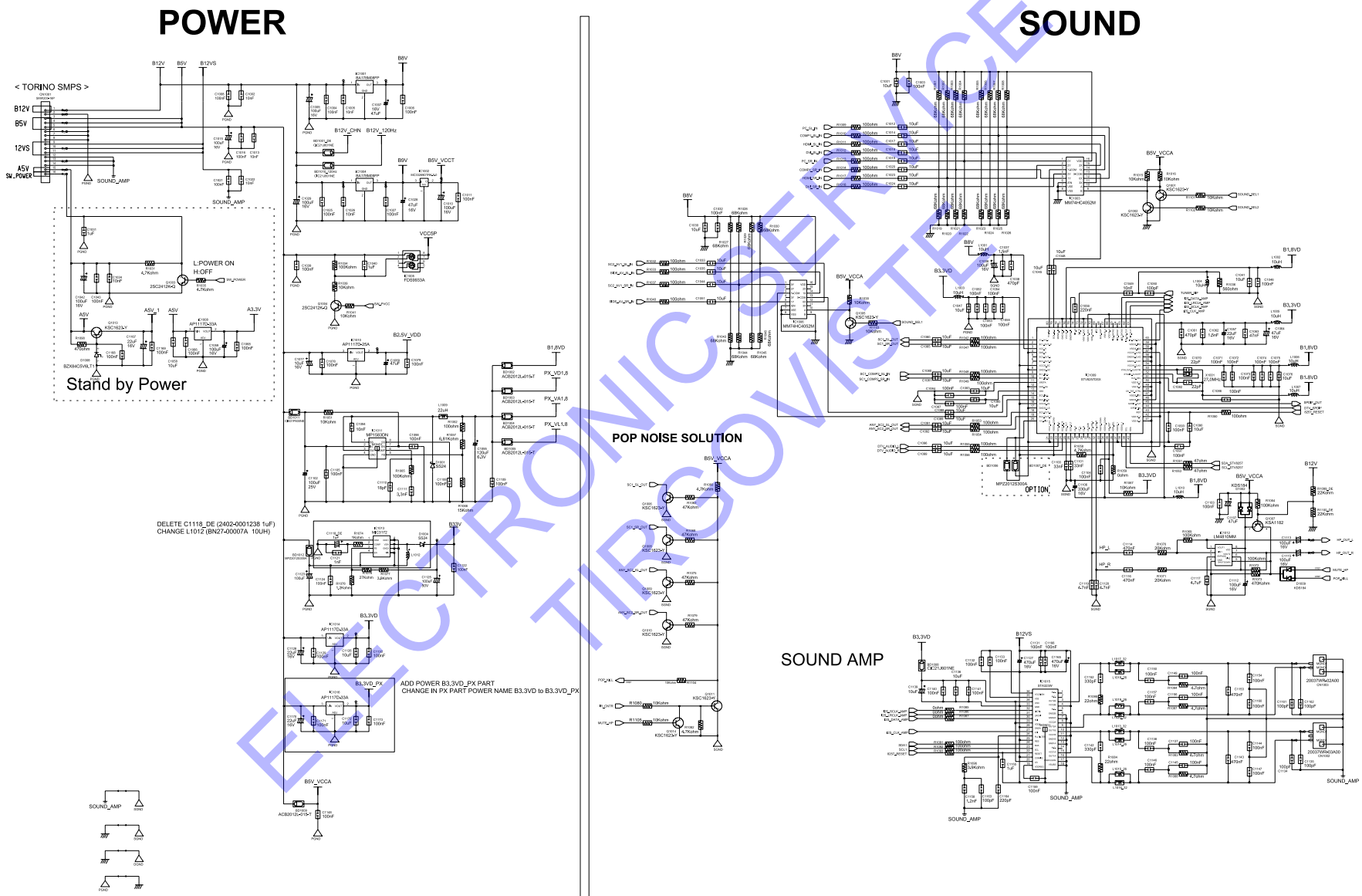

ELECTRONIC SERVICE TIRGOVISTE

-This Document can not be used without Samsung ' s authorization.

9-2 Schematic Diagram

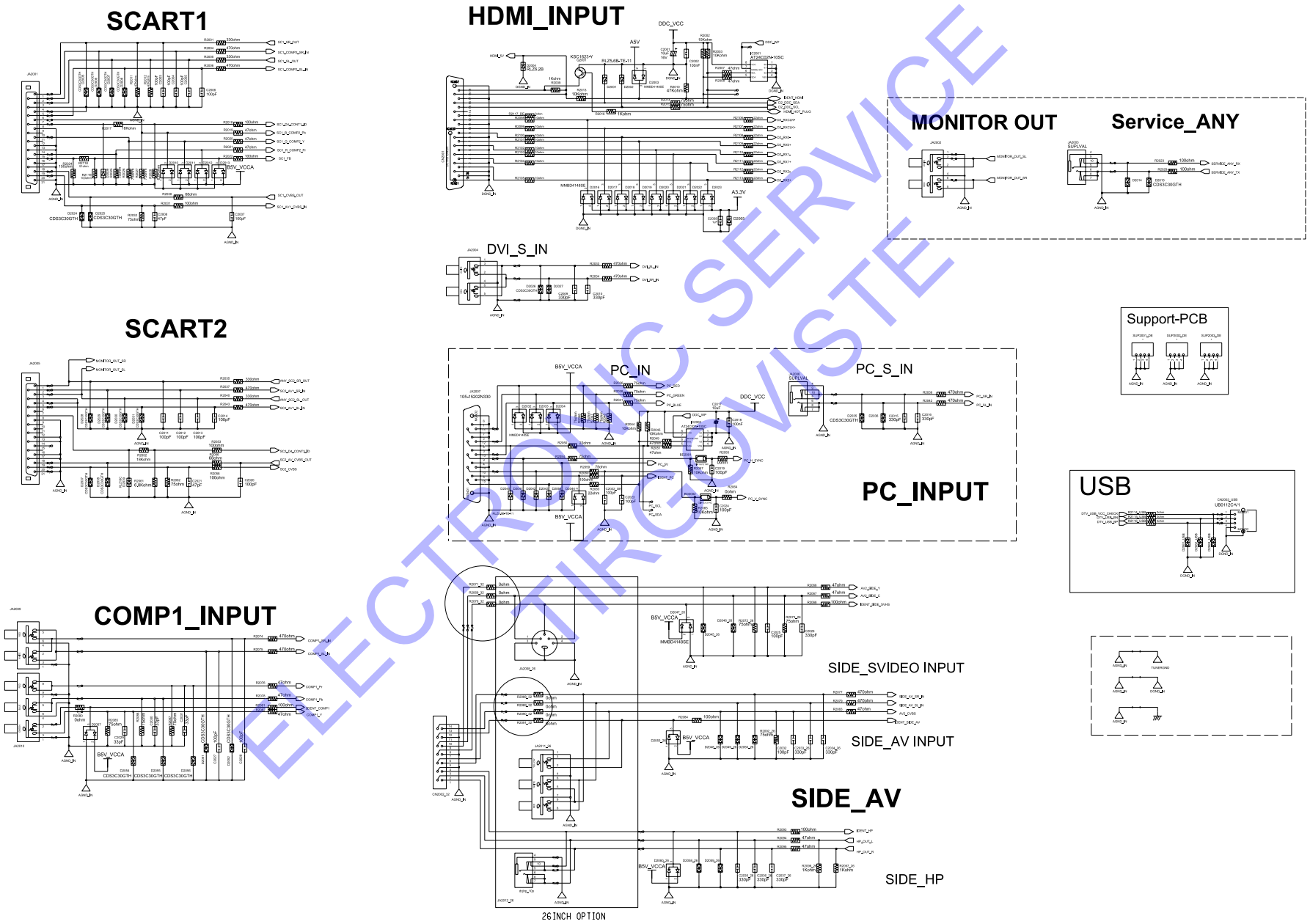

ELECTRONIC SERVICE
TIRGOVISTE

-This Document can not be used without Samsung ' s authorization.

9-3 Micom Schematic Diagram

MICOM

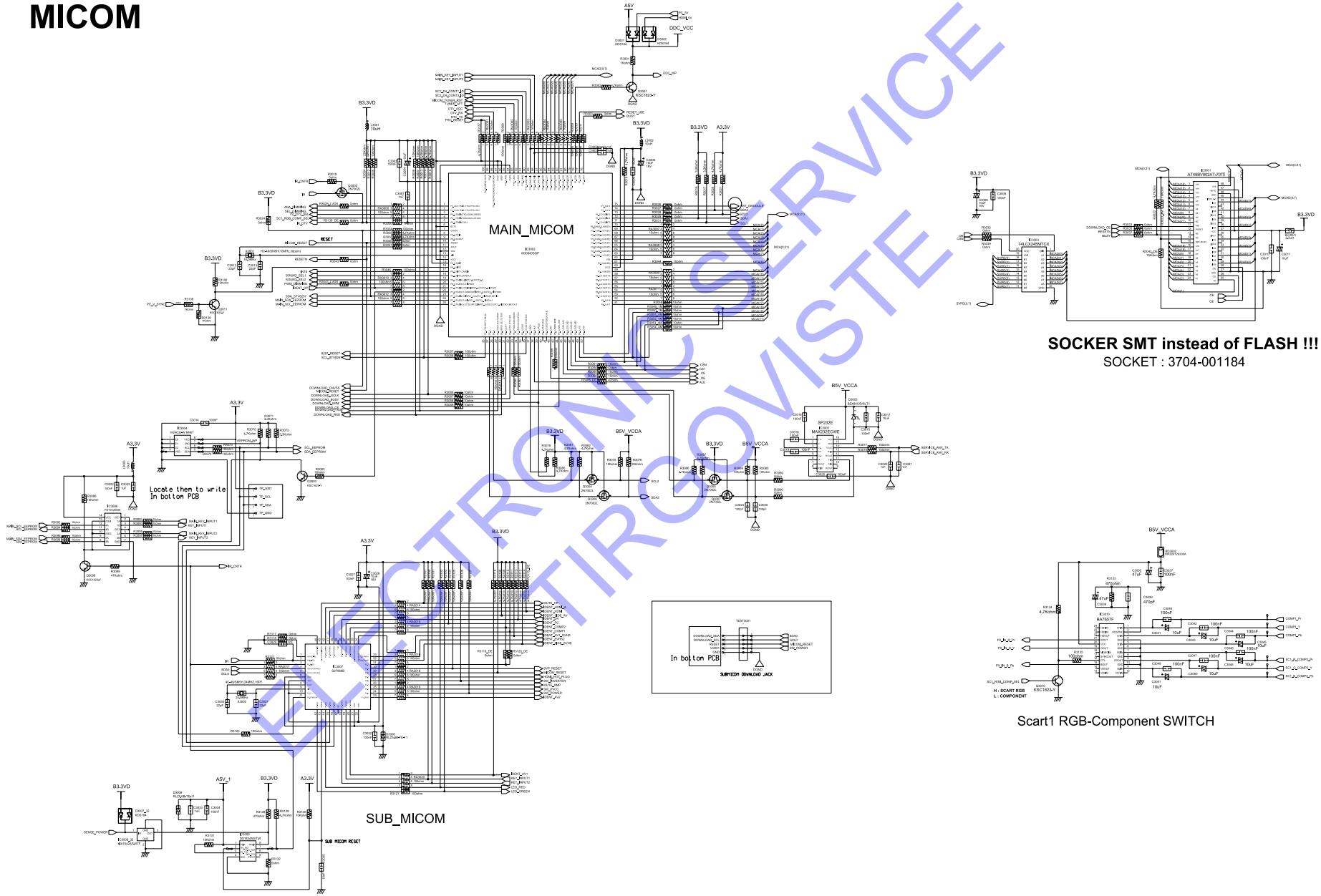

ELECTRONIC SERVICE
TIRGOVISTE

-This Document can not be used without Samsung ' s authorization.

9-4 SVP-PX/PX-Power/LBE-Option Schematic Diagram

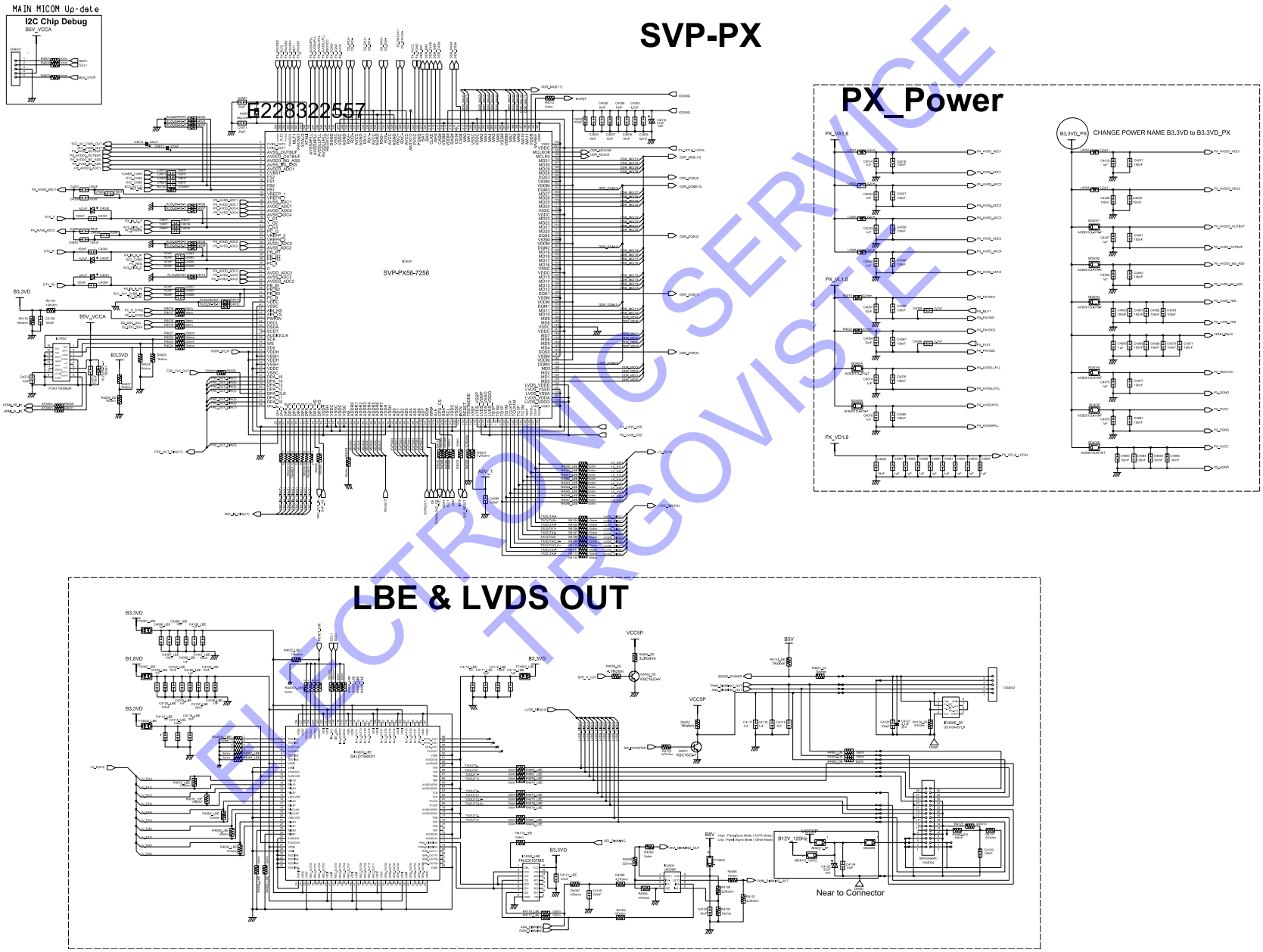

ELECTRONIC SERVICE TIRGOVISTE

-This Document can not be used without Samsung ' s authorization.

9-5 Application Schematic Diagram

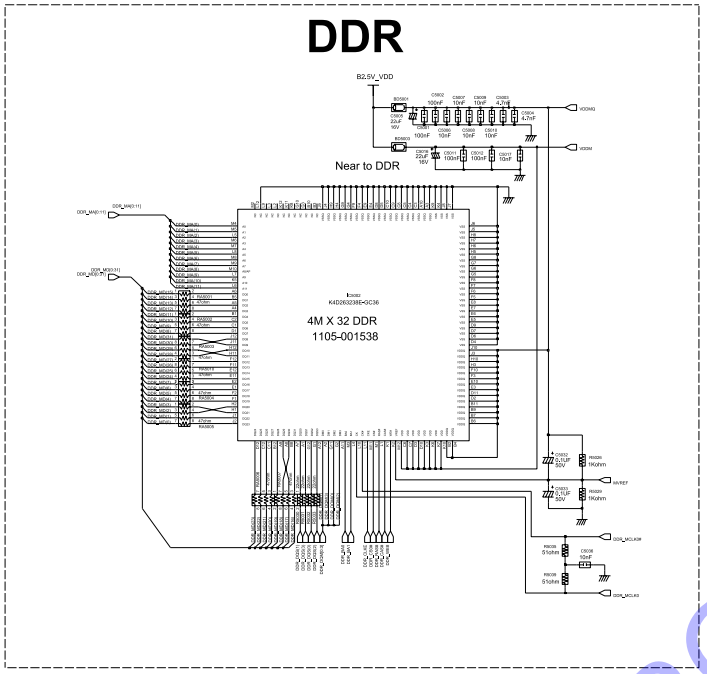

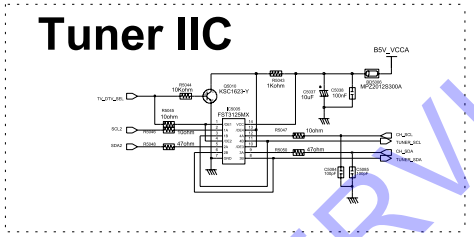

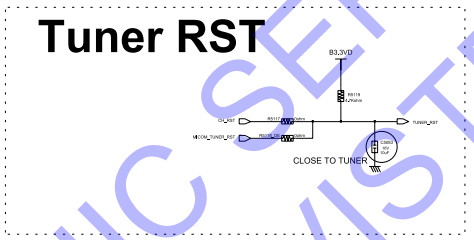

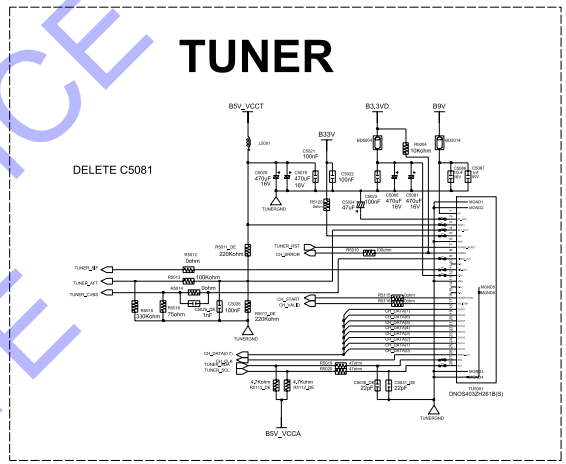

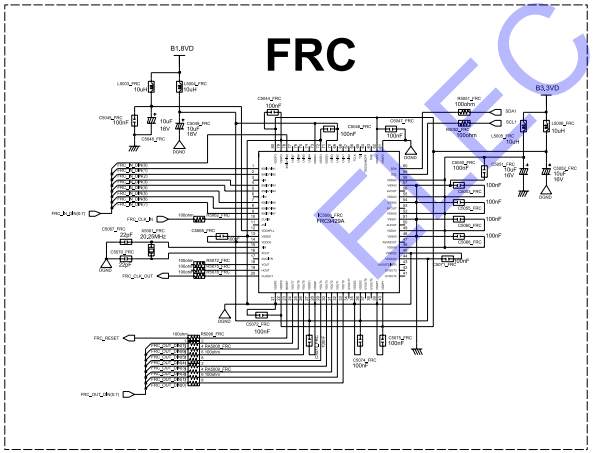

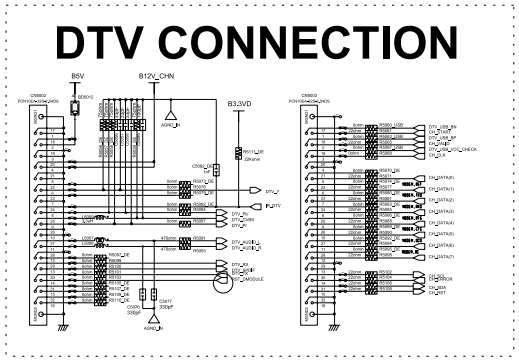

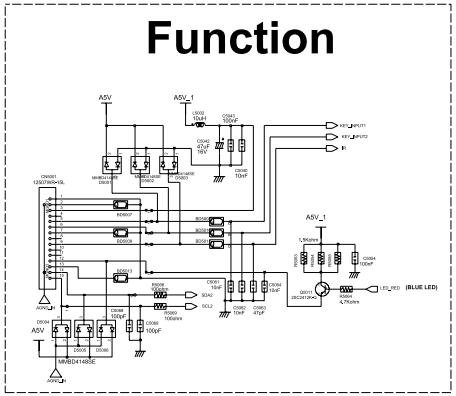

ELECTRONIC SERVICE TIRGOVISTE

Memo

ELECTRONIC SERVICE
TIRGOVISTE

10 Operating Instructions and Installation

10-1 Front

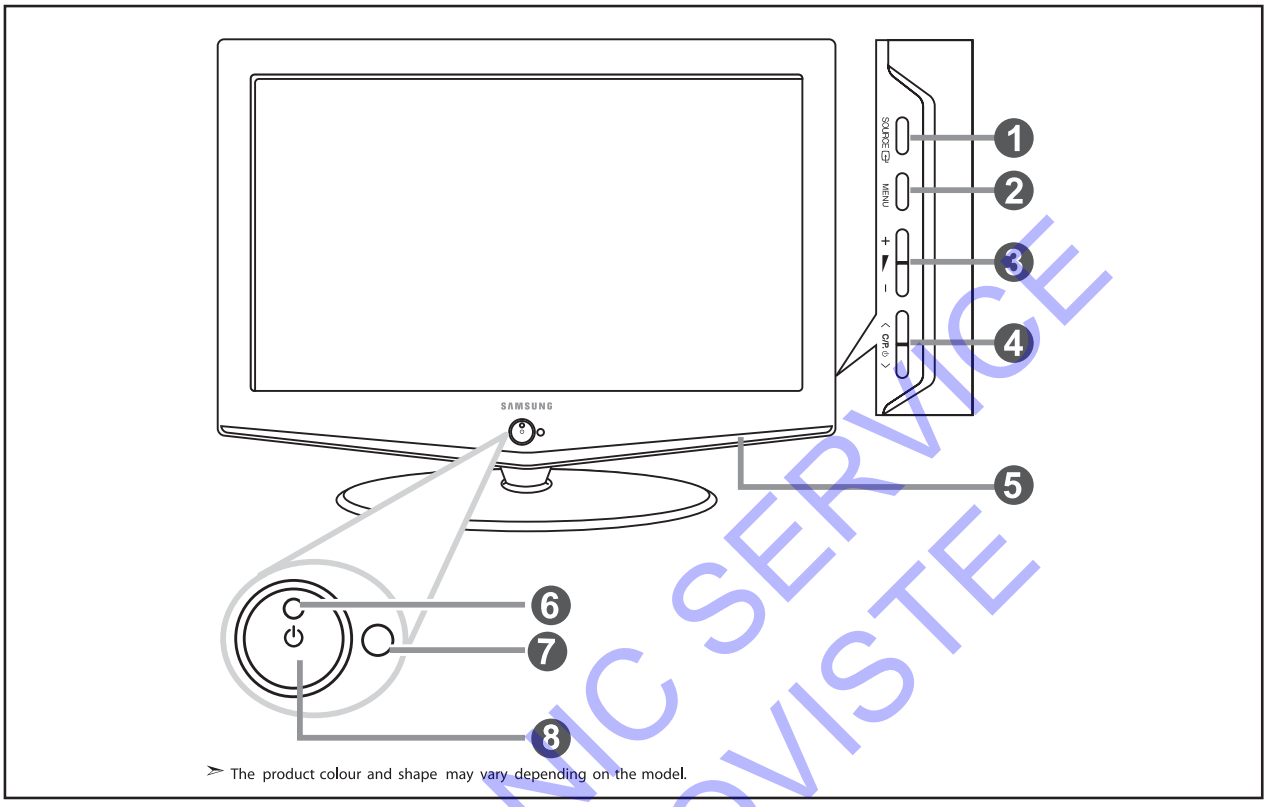

- The product color and shape may vary depending on the model.

1. SOURCE

Displays a menu of all of the available input sources (TV, Ext.1, Ext.2, AV, S-Video, Component, PC, HDMI, DTV). In the on-screen menu, use this button as you use the ENTER button on the remote control.

2. MENU

Press to see an on-screen menu of your TV's features.

3. + ◢ −

Press to decrease or increase the volume.
In the on-screen menu, use the + ◢ − buttons as you use the ◀ and ▶ buttons on the remote control.

4. ∨C/P.⏻∧

Press to change channels.
In the on-screen menu, use the ∨C/P.⏻∧ buttons as you use the ▼ and ▲ buttons on the remote control.

5. SPEAKERS

6. POWER INDICATOR

Blinks and turns off when the power is on and lights up in stand-by mode.

7. REMOTE CONTROL SENSOR

Aim the remote control towards this spot on the TV.

8. ⏻ (POWER)

Press to turn the TV on and off.

ELECTRONIC SERVICE TIRGOVISTE

10-2 Connection Panel

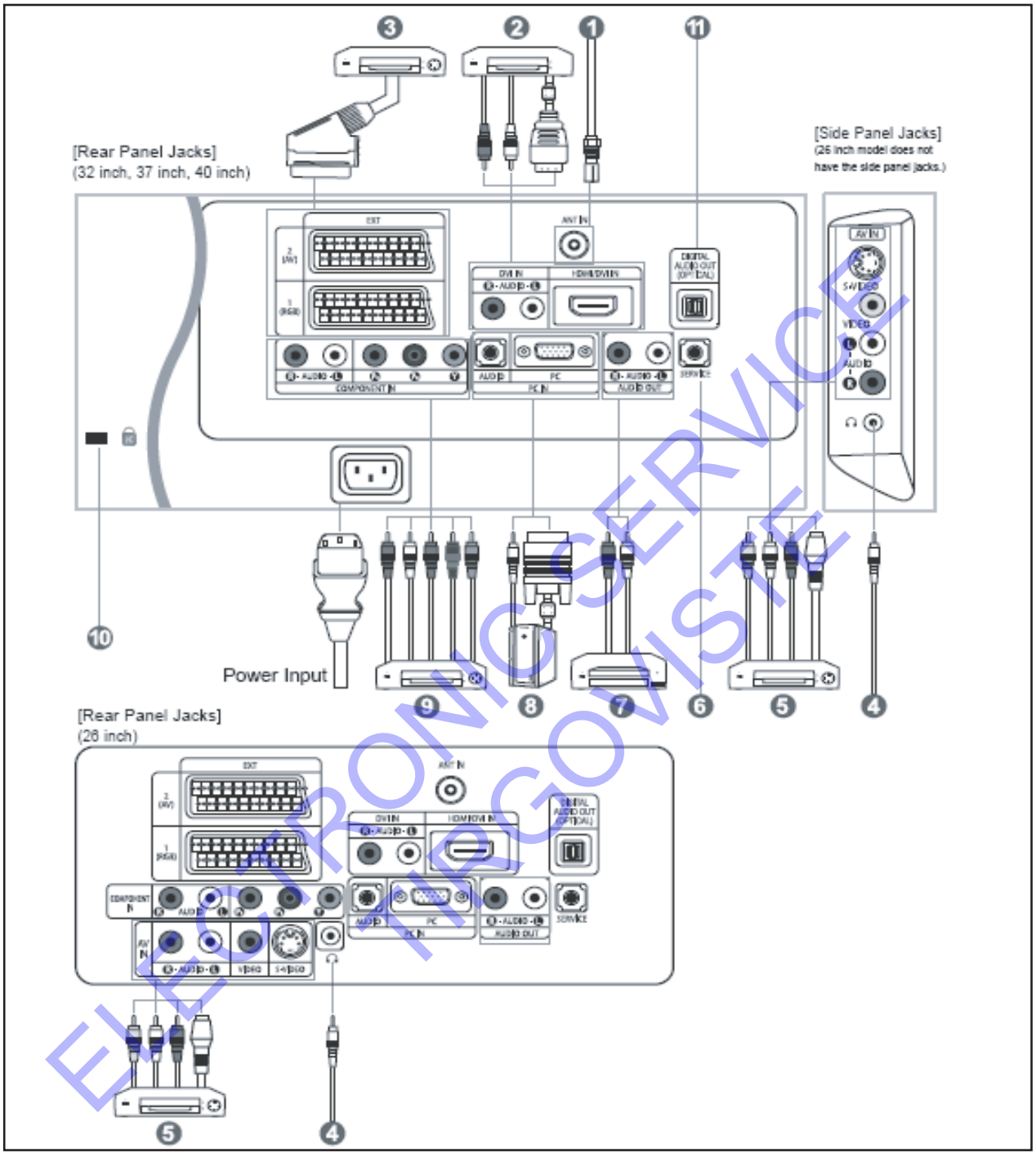

ELECTRONIC SERVICE TIRGOVISTE

☛ Whenever you connect an external device to your TV, make sure that power on the unit is turned off.
☛ When connecting an external device, match the colour of the connection terminal to the cable.

1. **Connecting an Aerial or Cable Television Network**
   To view television channels correctly, a signal must be received by the set from one of the following sources:
   - An outdoor aerial / A cable television network / A satellite network
2. **Connecting HDMI/DVI**
   - Supports connections between HDMI-connection-enabled AV devices (Set-Top Boxes, DVD players, AV receivers and digital TVs).
   - No sound connection is needed for an HDMI to HDMI connection.
     ▶ What is HDMI?
   - HDMI, or high-definition multimedia interface, is a next-generation interface that enables the transmission of digital audio and video signals using a single cable without compression.
   - "Multimedia interface" is a more accurate name for it especially because it allows multiple channels of digital audio(5.1 channels).The difference between HDMI and DVI is that the HDMI device is smaller in size, has the HDCP(High Bandwidth Digital Copy Protection) coding feature installed, and supports multi - channel digital audio.
   - Use the HDMI/DVI terminal for DVI connection to an extended device.
     ▶ You should use the DVI-to-HDMI cable or DVI-HDMI Adapter for the connection, and the "R - AUDIO - L" terminal on DVI for sound output.
     - When connecting this product via HDMI or DVI to a Set Top Box, DVD Player or Games Console etc, make sure that it has been set to a compatible video output mode as shown in the table below.
       Failure to observe this may result in picture distortion, image breakup or no picture.
3. **Connecting Set-Top Box, VCR or DVD**
   - Connect the VCR or DVD SCART cable to the SCART connector of the VCR or DVD.
   - If you wish to connect both the Set-Top Box and VCR (or DVD), you should connect the Set-Top Box to the VCR (or DVD) and connect the VCR (or DVD) to your set.
5. **Connecting External A/V Devices**
   - Connect RCA or S-VIDEO cable to an appropriate external A/V device such as VCR, DVD or Camcorder.
   - Connect RCA audio cables to "R - AUDIO - L" on the rear of your set and the other ends to corresponding audio out connectors on the A/V device.
   - Headphone may be connected to the headphone output (**4**) on the rear of your set. While the headphone is connected, the sound from the built-in speakers will be disabled.
6. **SERVICE**
   - Connector for engineer.
7. **Connecting AUDIO**
   - Connect RCA audio cables to "R - AUDIO - L" on the rear of your set and the other ends to corresponding audio in connectors on the Amplifier or DVD Home Theater.
8. **Connecting Computer**
   - Connect the D- Sub cable (optional) to "PC (PC IN)" on the rear of your set and the other end to the Video Card of your computer.
   - Connect the stereo audio cable (optional) to "AUDIO (PC IN)" on the rear of your set and the other end to "Audio Out" of the sound card on your computer.
9. **Connecting Component Devices (DTV/DVD)**
   - Connect component video cables (optional) to component connector ("PR", "PB", "Y") on the rear of your set and the other ends to corresponding component video out connectors on the DTV or DVD.
   - If you wish to connect both the Set-Top Box and DTV (or DVD), you should connect the Set-Top Box to the DTV (or DVD) and connect the DTV (or DVD) to component connector ("PR", "PB", "Y") on your set.
   - The PR, PB and Y connectors on your component devices (DTV or DVD) are sometimes labeled Y, B-Y and R-Y or Y, Cb and Cr.
   - Connect RCA audio cables (optional) to "R - AUDIO - L" on the rear of your set and the other ends to corresponding audio out connectors on the DTV or DVD.
   - This LCD TV displays the optimum picture in 720p mode.
   - This LCD TV displays the Maximum picture in 1080i mode.

ELECTRONIC SERVICE TIRGOVISTE

10. Kensington Lock

- The Kensington lock (optional) is a device used to physically fix the system when used in a public place.
- If you want to use a locking device, contact the dealer where you purchased the TV.
- The place of the Kensington Lock may be different depending on its model.

11. DIGITAL AUDIO OUT (OPTICAL)

- Connect to a Digital Audio Component.

12. Connecting CI (Common Interface) CARD

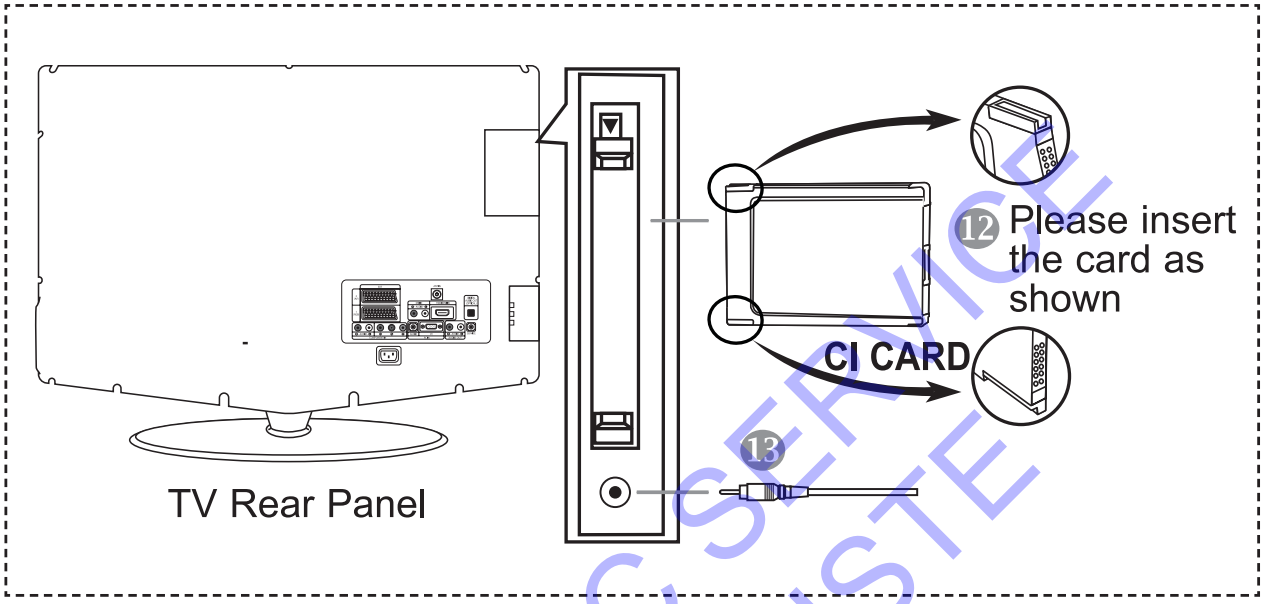

- When not inserting "CI CARD" in some channels, "Scrambled Signal" is displayed on the screen.
- The pairing information containing a telephone number, CI CARD ID, Host ID, and other information will be displayed in about 2~3 minutes. If an error message is displayed, please contact your service provider.
- When the channel information configuration has finished, the message "Updating Completed" is displayed, indicating that the channel list is now updated.

▶ You must obtain a CI CARD from a local cable service provider.
Remove the CI CARD by carefully pulling it out with your hands since dropping the CI CARD may cause damage to it.

13. Service Post

- Connector for engineer.

ELECTRONIC SERVICE TIRGOVISTE

10-3 Remote Control

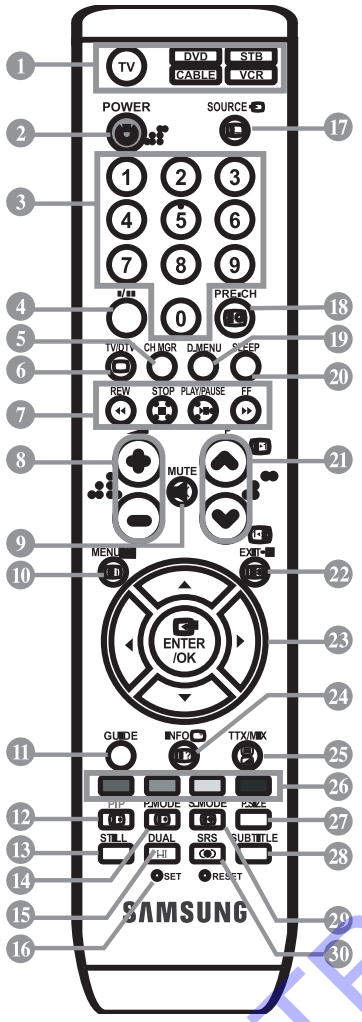

1. Selects a target device to be controlled by the Samsung remote control (TV, DVD, STB, CABLE, VCR)
2. Television Standby button
3. Number buttons for direct channel access
4. One/Two-digit channel selection
5. It display "Channel Manager" on the screen.
6. Selects the TV and DTV mode directly
7. VCR/DVD Functions Rewind, Stop, Play/Pause, Fast/Forward
8. ⊕ Volume increase ⊖ Volume decrease
9. Temporary sound switch-off
10. Menu display and change confirmation
11. Electronic Program Guide (EPG) display
12. Picture-In-Picture On / Off
13. Picture freeze
14. Picture effect selection
15. Sound effect selection
16. Adjusts 5 separate devices - TV, DVD, STB, CABLE, or VCR.
17. Available source selection
18. Previous channel
19. DTV menu display
20. Automatic Power-off
21. P⌃: Next channel P⌄: Previous channel
22. Exit the OSD
23. Control the cursor in the menu
24. Use to see information on the current broadcast
27. Picture size selection
28. Digital subtitle display
29. Sound mode selection
30. SRS TSXT selection

Teletext Functions

6. Exit from the teletext display
10. Teletext index
12. Teletext hold
14. Teletext size selection
17. Teletext mode selection (LIST/FLOF)
18. Teletext sub page
21. P⌃: Teletext next page P⌄: Teletext previous page
22. Teletext cancel
24. Teletext reveal
25. Alternately select Teletext, Double, or Mix.
26. Fastext topic selection
29. Teletext store

➢ The performance of the remote control may be affected by bright light.

➢ This is a special remote control for the visually impaired, and has Braille points on the Power, Channel and Volume buttons.

ELECTRONIC SERVICE TIRGOVISTE

10-4 Installing the Stand

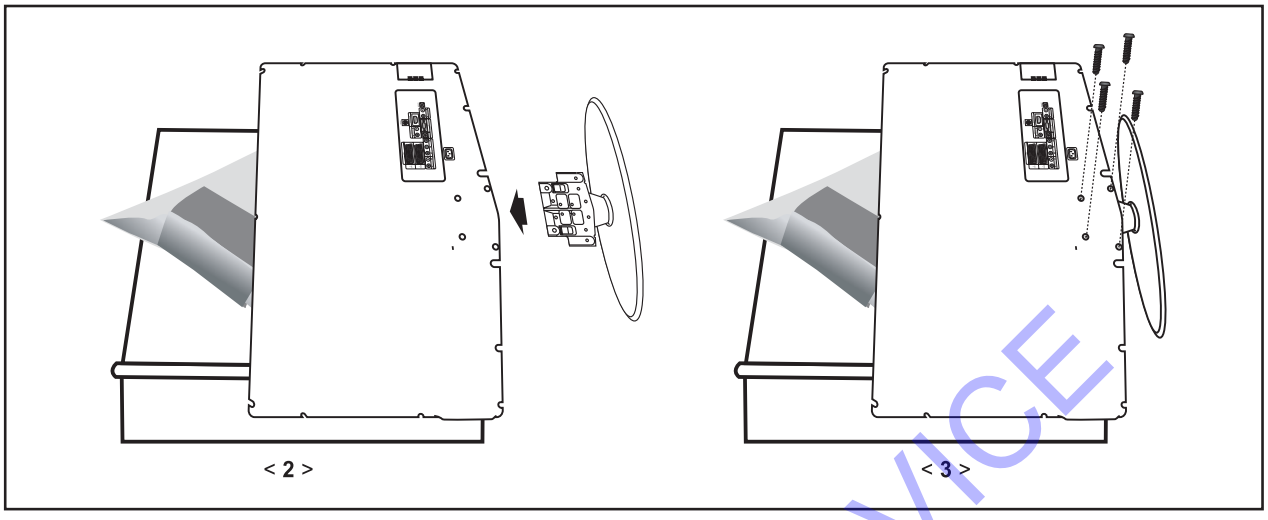

1. Place the TV faced down on a soft cloth or cushion on a table.
2. Put the stand into the hole at the bottom of the TV.
3. Insert screw into the hole indicated and tighten.

ELECTRONIC SERVICE TIRGOVISTE

12 PCB Diagram

12-1 26" Main PCB Diagram

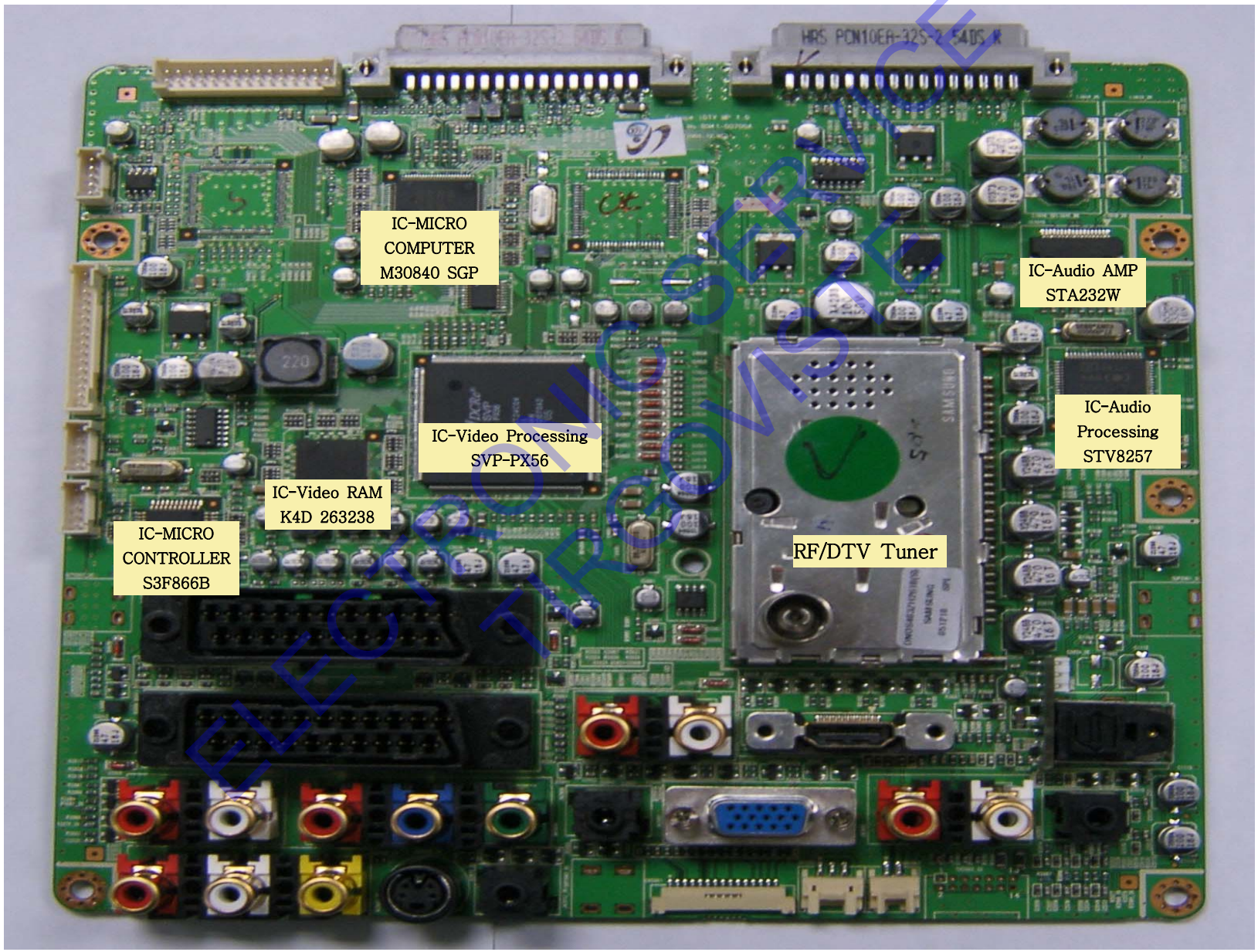

ELECTRONICSERVICE
TREOVISION

12-2 32" , 37" , 40" Main PCB Diagram

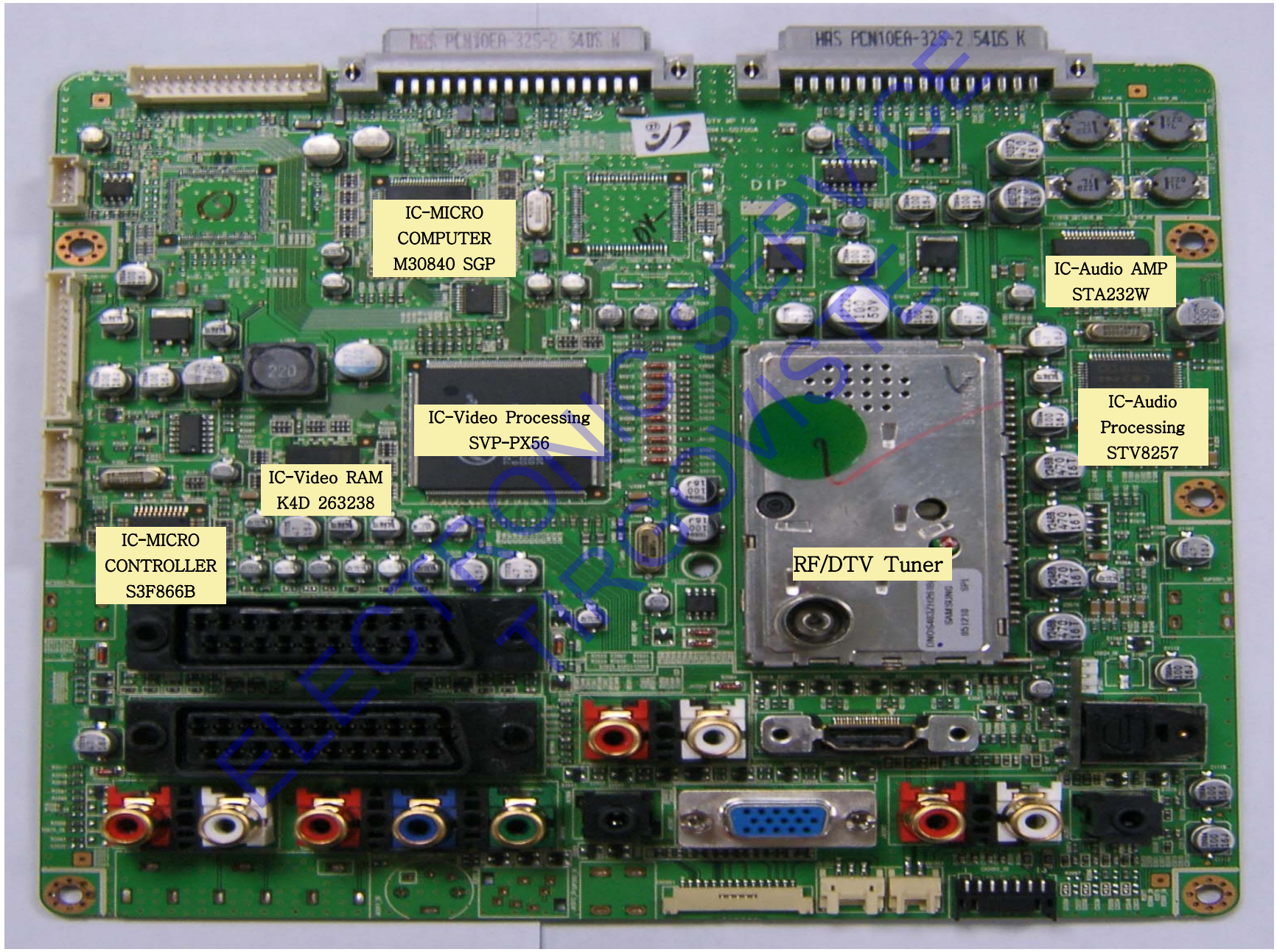

12-3 DTV MODULE PCB Diagram (Only for R62F)

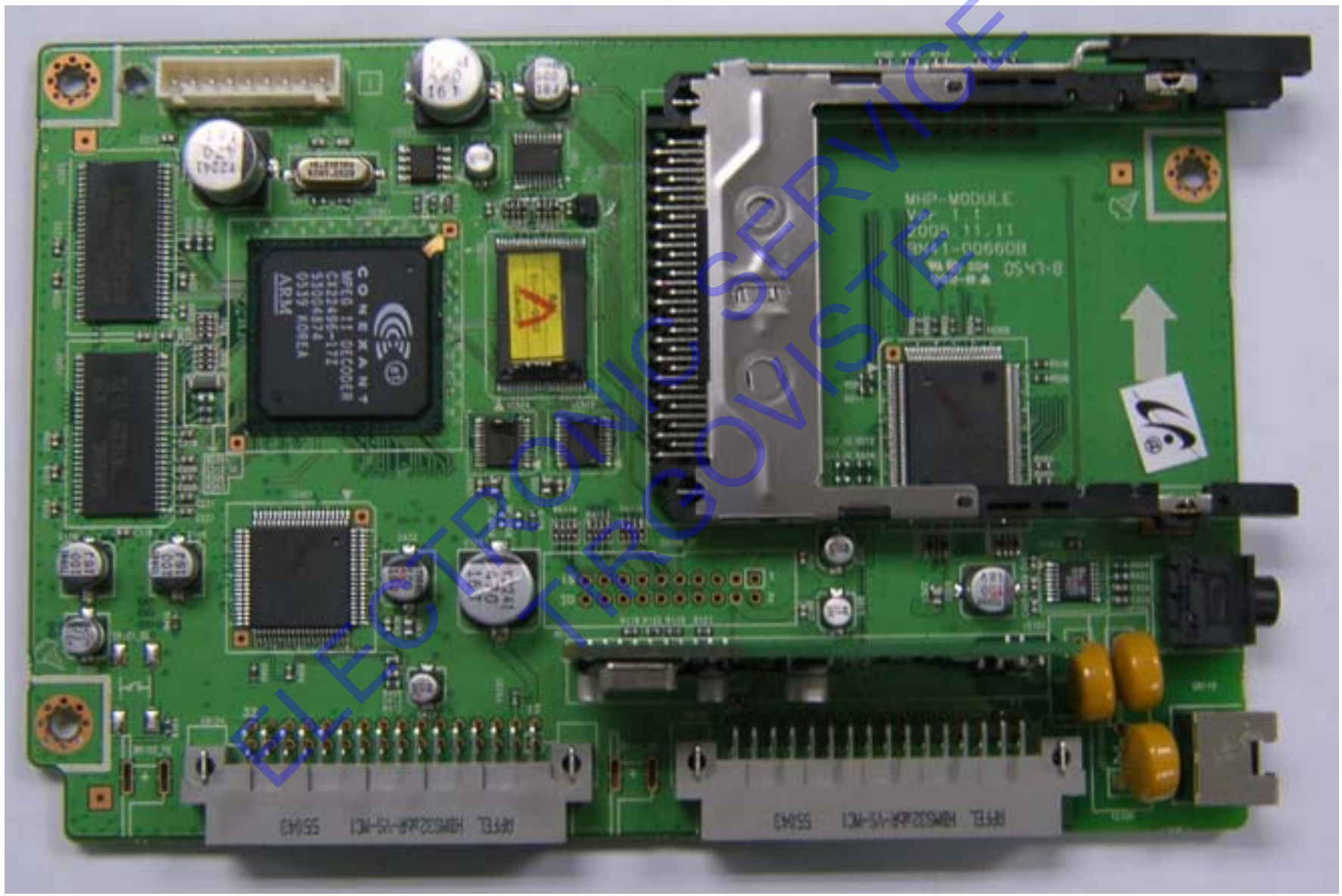

ELECTRONIC SERVICE TIRGOVISTE

12-4 DTV MODULE PCB Diagram

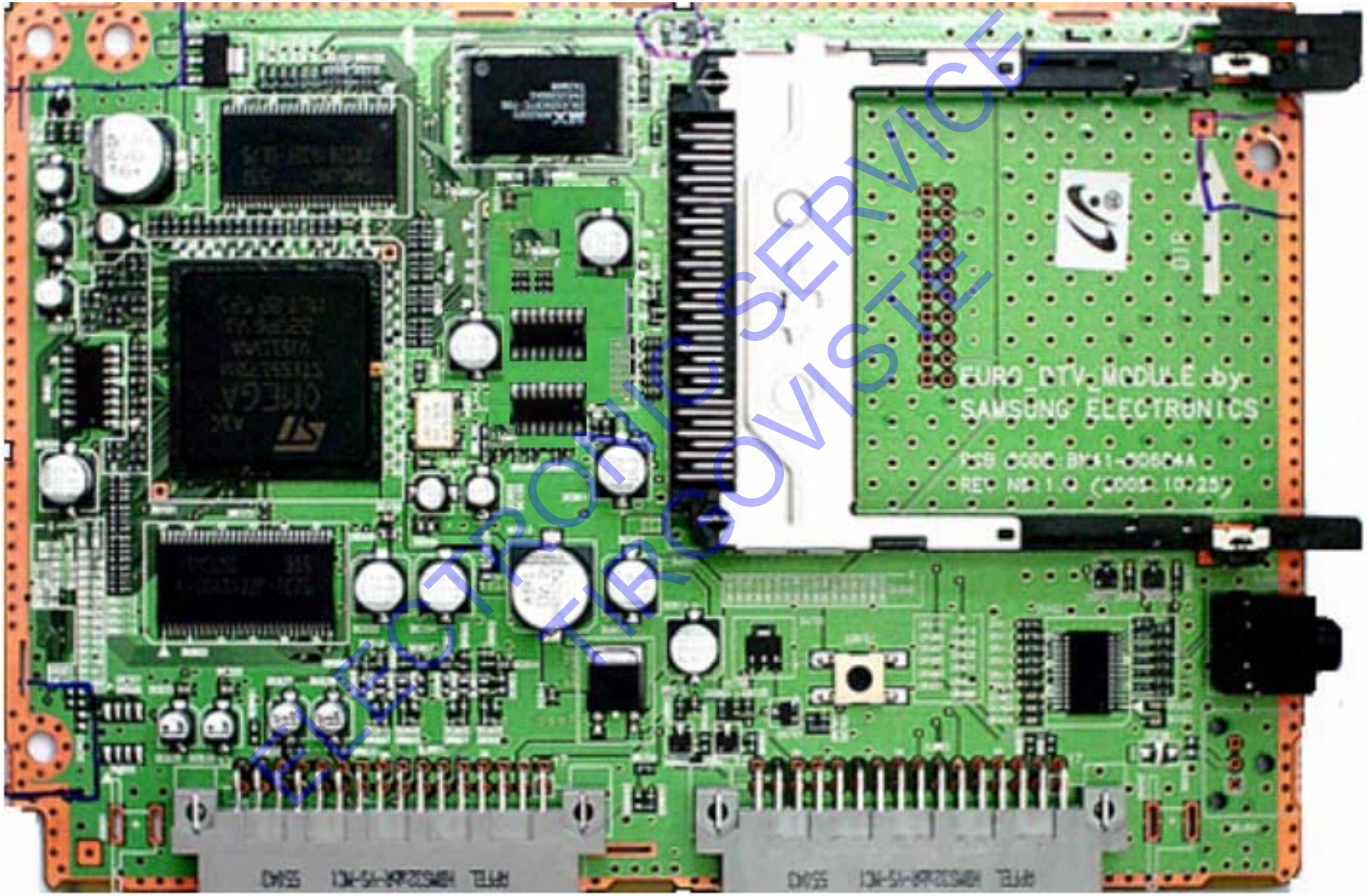

ELECTRONIC SERVICE
TIRGOVISTE

13 Circuit Descriptions

13-1 Main Signal Description

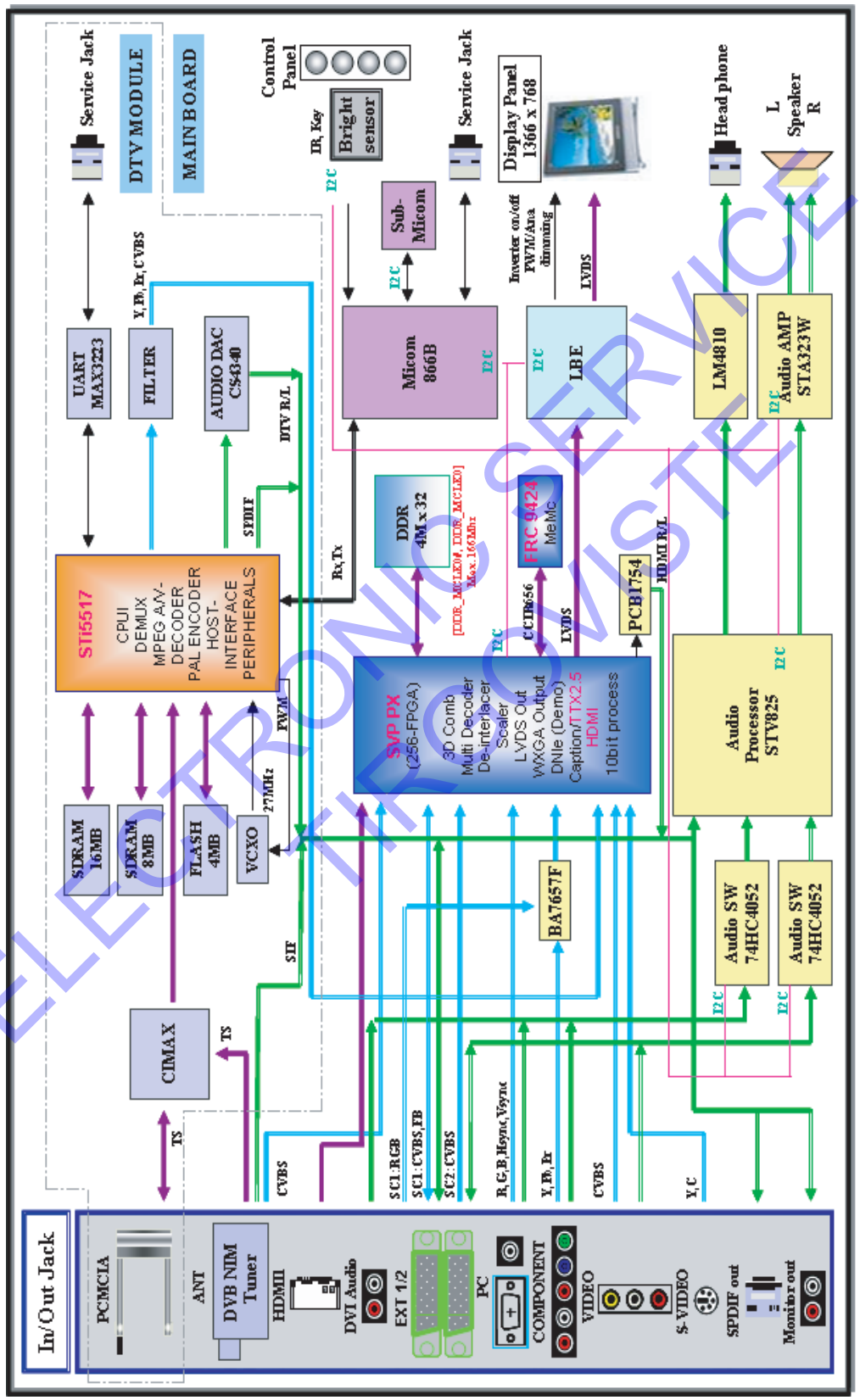

ELECTRONIC SERVICE TIRGOVISTE

13-2 DTV Signal Description

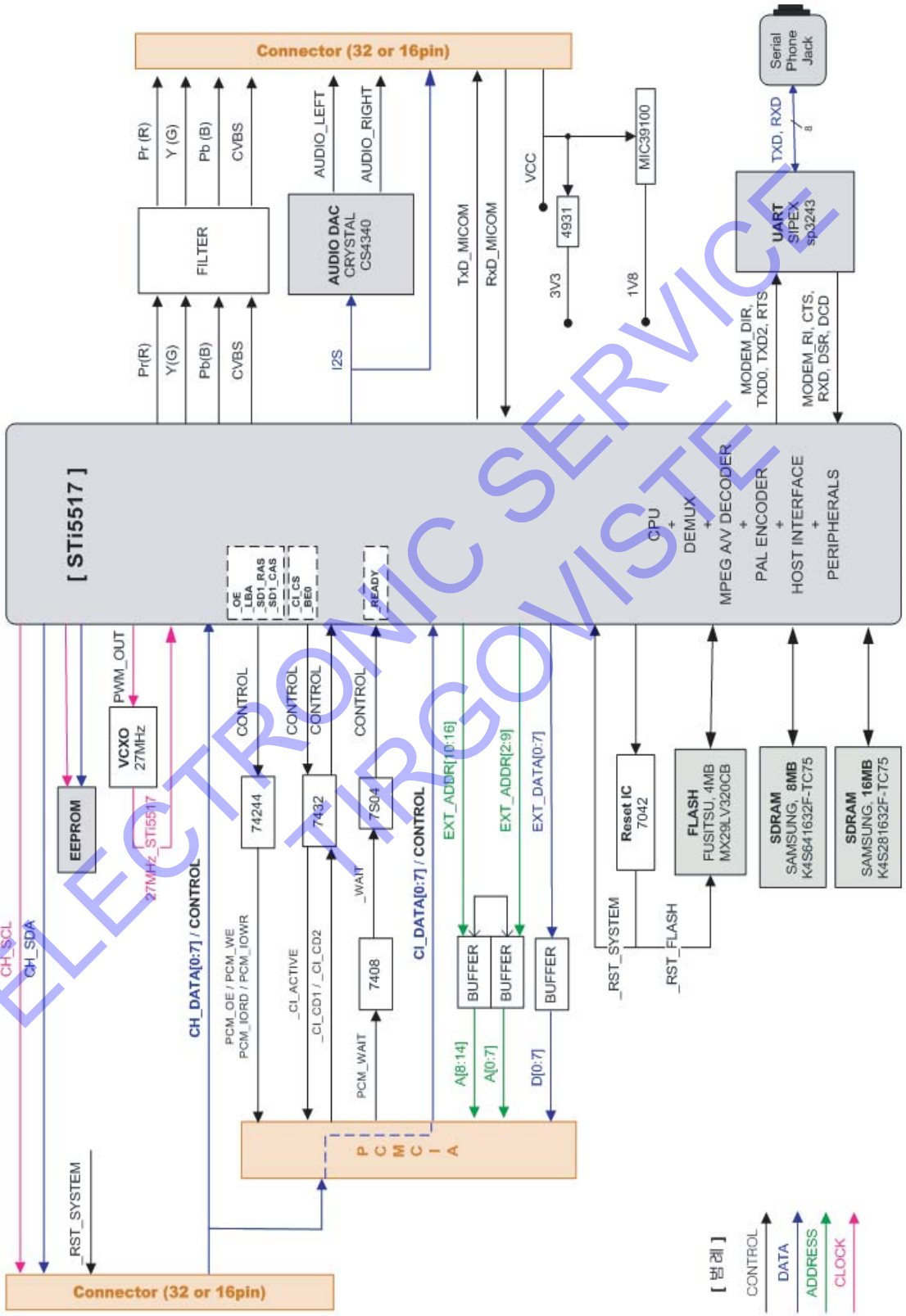

ELECTRONIC SERVICE TIRGOVISTE

13-3 DTV Signal Description (Only for R62F)

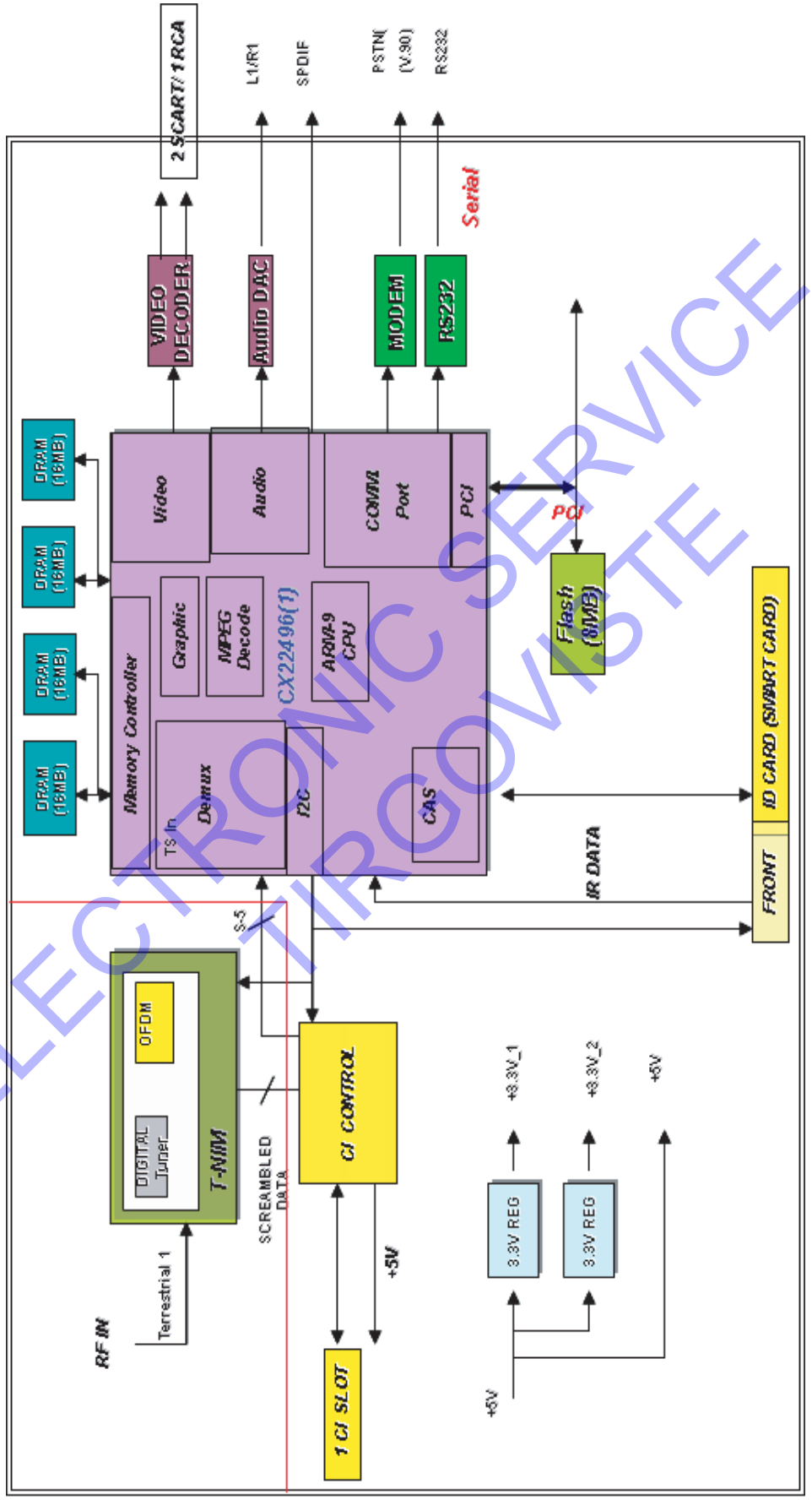

ELECTRONIC SERVICE TIRGOVISTE

13-4 RF/DTV Tuner (DNOS303ZH261B(S)) SPEC.

1. Description

1-1 Receiving System : Designed to cover all bands in VHF and UHF including digital terrestrial(DVB-T) and hyper channels for CCIR system.

1-2 It built in COFDM-Demod IC & Analog Demod IC (PAL B/G, I, D/K, SECAM L/L')

1-3 Receiving Channel : 47MHz ~ 862MHz

1-4 Intermediate Frequency : Digital(center) 36.167 MHz, Analog(picture) 38.9MHz

1-5 Input Impedance : 75§Ù, Unbalanced.

1-6 Terminals name and function

Pin No	Connection	Remark		Pin No	Connection	Remark
1	N.C			15	N.C	
2	RF AGC			16	SYNC	
3	5V			17	VALID	
4	AFT			18	MD7	MPEG data output7
5	30V			19	MD6	MPEG data output6
6	GND			20	MD5	MPEG data output5
7	RESET			21	MD4	MPEG data output4
8	ERROR			22	MD3	MPEG data output3
9	VIDEO OUT			23	MD2	MPEG data output2
10	N.C			24	MD1	MPEG data output1
11	SIF OUT			25	MD0	MPEG data output0
12	3.3V			26	MPEG CLK	
13	GND			27	SDA	
14	N.C			28	SCL	

2. Mechanical Characteristics

2-1 Dimensions : refer Fig1

2-2 Weight : 60g

2-3 RF input : RCA (female)

2-4 Holding Strength of Ant jack.

Withdrawal force of center contact

: Perform insert & extract test for 20 times. Into receptacle contact by using gauge, showing in Fig-2. It shall be maintain 50g.

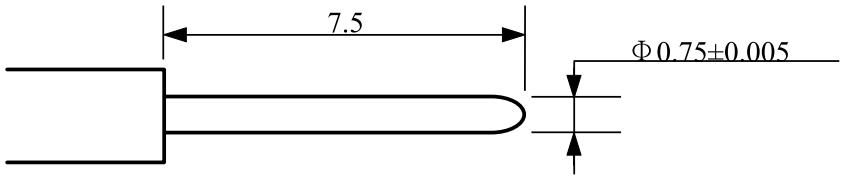

FIG - 2

ELECTRONIC SERVICE TIRGOVISTE

3. General Characteristics

3-1 Temperature Range

Storage Temperature : -20℃ ~ +80℃

Operation Temperature : 0℃ ~ +65℃

3-2 Test conditions : All data hold under following conditions

T(amb.) : +25±2℃ / Humidity : 45 ~ 65 % RH

Supply voltage(5V) : +5V ± 2%

Tuning voltage (BT) : +30V ± 2%

Supply voltage(3.3V) : +3.3V ± 2%

3-3 Current Consumption

Supply Voltage (5V) : 180mA Max.

Tuning Voltage(30V) : 5mA Max.

Supply Voltage(3.3V) : 160mA Max.

4. Electrical Characteristics (RF block & Digital Demodulation)

4-1 Input Frequency Range

VHF-Low Band : 47MHz ~ 174MHz

VHF-High Band : 174MHz ~ 470MHz

UHF Band : 470MHz ~ 862MHz

4-2 Input Signal Level : -78dBm ~ -20dBm (Average power, 64QAM)

4-3 Voltage Gain

1st IF : 40dB typ. 38dBmin.

4-4 Noise Figure

1st IF : 4.5dB typ. 6.5dB max. (at max. gain)

4-5 OFDM-Demod IC : MT353 (produced by Zarlink)

4-6 Input Impedance : 75Ω

4-7 RF Input/Output Return Loss : -8dB typ. -6dB min.

4-8 IF Frequency

1) Digital center frequency : 36.167MHz

2) Analog (PAL B/G, I, D/K, SECAM L/L')

Picture intermediate frequency :

38.9MHz(PAL B/G & SECAM L), 33.9MHz(SECAM L')

Sound intermediate frequency :

33.4MHz(B/G), 32.9MHz(I), 32.4MHz(D/K,SECAM L), 40.4MHz(SECAM L')

4-9 IF Response curve

1) Amplitude ripple in band (AGC Volt 4.0 ~ 0.8V) : ±3dB max.

Center¡¾4MHz (Above 306MHz)

Center¡¾3.5MHz (Below 300MHz)

2) 3dB bandwidth in band (AGC Volt 4.0 ~ 0.8V) for digital channel receiving

8MHz : The GPP3 port of the MT353 is high level.

7MHz : The GPP3 port of the MT353 is low level.

4-10 Spurious Signals at Input Terminal

Local Oscillator Leakage : 46dBuV max.

ELECTRONIC SERVICE TIRGOVISTE

4-11 Reference Frequency

The X-tal for the RF block's PLL : 4MHz

4-12 Phase Noise (step frequency 166.67kHz for digital)

@ 1kHz : -84dBc/Hz typ. -75dBc/Hz max.

@ 10kHz : -90dBc/Hz typ. -80dBc/Hz max.

4-13 Control Data Bus : I2C

4-14 Control Data Format : refer 5 section

4-15 Image PAL Interference Protection Ratio

: -49dB typ. -46dB min (at 2K, 8K mode) Note1.

4-16 Adjacent PAL Interference Protection Ratio. (N ±1 channel)

: -38dB typ. -35dB min (at 2K, 8K mode) Note1.

4-17 Co-Channel PAL Interference Ratio.

: +1dB typ. +4dB min (at 2K, 8K mode) Note1.

◆ Note1 :

Desire input signal condition

a : Modulation - 64QAM

b : Guard Interval - 1/32

c : Puncture Rate - 2/3

Undesired input signal condition :

PAL : Video 75% color bars

FM sound : 1kHz tone (P/S : 13dB, ± 50kHz deviation, freq. P/S : 6.0MHz)

※ Adjacent & Image channel PAL interference test procedure

a. Turn DVB-T source off ; adjust PAL PSP level to -25dBm

b. Turn PAL off ; turn DVB-T on

c. Adjust DVB-T to -25dBm

d. Turn PAL on and increase step PAL level to see the pixelation on the screen

e. Note protection ratio as the difference value between DVB-Tand PAL's level

※ Co-Channel PAL interference test procedure

a. Turn PAL source off ; adjust DVB-T level to -50dBm

b. Turn DVB-T off ; turn PAL on

c. Adjust PAL to -50dBm

d. Turn DVB-T on and increase step attenuator in PAL channel until QEF.

4-18 Input Carrier to Noise (Additive White Gaussian Noise, QEF. Condition)

: 17.4dB typ. 18.4dB max. (64QAM, 2K,8K Mode, Code rate:2/3, input level:-50dBm)

: 22.5dB typ. 23.5dB max. (64QAM, 2K,8K Mode, Code rate:7/8, input level:-50dBm)

4-19 Sensitivity (QEF. Condition)

: -80dBm typ. -77dBm max.(64QAM, 2K,8K Mode, Code rate:2/3,Guard Interval 1/32)

: -73dBm typ. -70dBm max.(64QAM, 2K,8K Mode, Code rate:7/8,Guard Interval 1/32)

4-20 Multipath channel Interference (64QAM, 2K, 2/3code rate, 1/32G.I)

ELECTRONIC SERVICE TIRGOVISTE

short echo : 20.2dB max

Path	Delay(us)	Relative Attenuation(dB)
1	0	2.8
2	0.05	0
3	0.4	3.8
4	1.45	0.1
5	2.3	2.6
6	2.8	1.3

short delay parameter

long echo : 22.2dB max

Path	Delay(us)	Relative Attenuation(dB)
1	0	0
2	5	9
3	14	22
4	35	25
5	54	27
6	75	28

long delay parameter

5. Electrical Characteristics (Analog Demodulation)

5-1 PIF characteristics

Parameter		Specification			Unit	Remark
		Min.	Typ.	Max.		
Video Output Level		0.95	1.0	1.05	Vp-p	*Input level : 70dBuV *PAL : 87.5% mod.
Luminance S/N Ratio		45	47	-	dB	*Input level : VHF 70dBuV UHF 70dBuV *HPF : 100kHz *LPF : 5MHz, SC trap : ON *100% white signal (0.7Vp-p) *PAL : 87.5% mod. *Weight : OFF
Sensitivity	VHF	-	44	47	dBuV	S/N = 30dB HPF : 100kHz LPF : 5MHz, SC trap : ON 100% white signal PAL : 87.5% mod.
	UHF		45	48		
Chroma Distortion	DP	-7	3	+7	Deg	*Input level : 70dBuV *10 stair step *PAL : 87.5% mod.
	DG	-7	3	+7	%	
Y/C Delay		-75	0	75	nsec	Y is reference(B/G MODE)
Video Frequency Response PAL SECAM L	1.0MHz	-1.0	0	+1.0	dB	*Input level : 70dBuV *Vedeo Signal - PAL : 87.5 %, AM MOD - Muli - Burst Signal
	2.0MHz	-1.5	0	+1.5		
	3.0MHz	-2.0	0	+2.0		
	4.43MHz	-4.0	-1	+1.5		
Video Frequency Response SECAM L'	1.0MHz	-3.0	0	+3.0	dB	*Input level : 70dBuV *Vedeo Signal - SECAM : 95 %, AM MOD - Muli - Burst Signal
	2.0MHz	-3.5	0	+3.5		
	3.0MHz	-4.0	0	+3.5		
	4.43MHz	-6.5	-2.5	+3.0		
BURST LEVEL		15	25	45	%	*Input level : 70dBuV *Vedeo Signal - PAL : 87.5 %, AM MOD (Standard Color Bar Signal)

ELECTRONIC SERVICE TIRGOVISTE

5-2 AFT Characteristics

Parameter	Specification			Unit	Remark
	Min.	Typ.	Max.		
AFT Alignment Accuracy	+50	0	-50	KHz	Alignment center : 2.5V IF input level : 90dBuV P/S = -10dB Standard color bar :87.5% mod.

5-3 Audio characteristics

Parameter	Specification			Unit	Remark
	Min	Typ	Max		
SIF OUT Level	65	90		dBuV	Standard color bar 87.5% mod.

13-5 DTV MAIN ChipSet

13-5-1 STi5517SUA SPEC.

■ **Enhanced ST20 32-bit VL-RISC CPU**
- 180 MHz, 8 Kbyte instruction cache, 8 Kbyte data cache and 8 Kbyte SRAM

■ **Shared memory interface**
- 133 MHz,16-bit wide SDRAM interface, 64 and 128 Mbit support

■ **Programmable external memory interface**
- 6 separately configurable banks, 8/16-bits wide
- SRAM, SDRAM, Flash, SFlash support
- support for connection to HDD (PIO modes)

■ **Programmable transport interface (PTI)**
- 2 input static MUX
- single transport stream demux: DVB and/or DIRECTV®
- integrated DES-ECB, DVB, ICAM, Fast-I descramblers
- support for low cost DVB-CI interface

■ **MPEG-2 MP@ML video decoder**
- greater than 2x decoding speed
- trick modes including smooth fast-forward and rewind
- fully programmable horizontal and vertical SRCs

■ **Graphics/display**
- 5 display planes
- 2, 4 and 8 bpp CLUT graphics, 256 x 30 bits (AYCbCr) CLUT entries, 16 bpp true color graphics, RGB565, ARGB1555, ARGB4444 formats, link-list control
- alpha blending, antialiasing, antiflutter, antiflicker filters
- 2-D paced blitter engine with fill function
- display compositor with separate OSD controller for TV and VCR outputs

■ **PAL/NTSC/SECAM encoder**
- RGB, CVBS, Y/C and YUV outputs with 10-bit DACs
- encoding of CGMS, Teletext, WSS, VPS, close caption

■ **Audio subsystem**
- MPEG-1 layers I/II and layer III (MP-3)
- Dolby® Digital decoding
- Dolby Pro Logic® compatible output
- PCM mixing and sample rate conversion
- SRS/TruSurround® virtual surround sound
- IEC958/IEC1937 digital audio output interface
- integrated stereo audio DAC system

■ **DMA controller**

■ **On-chip peripherals**
- 5 ASCs (UARTs) with Tx and Rx FIFOs
- 6 8-bit banks of parallel I/O
- 2 smartcard interfaces and clock generators
- 2 SSCs for I C/SPI master/slave interfaces
- 4 PWM channels
- teletext serializer and DMA module
- multichannel infrared transmitter/receiver
- modem analog front-end interface (MAFE)
- TS output interface for connection to external IEEE1394 link-layer controller
- low-power / RTC / watchdog controller

■ **JTAG/TAP interface**

■ **Package 27x27 PBGA416**

ELECTRONIC SERVICE TIRGOVIŠTE

13-5-2 CS4340 SPEC.

Features

- Complete Stereo DAC System: Interpolation, D/A, Output Analog Filtering
- 101 dB Dynamic Range
- 91 dB THD+N
- Low Clock Jitter Sensitivity
- +3 V to +5 V Power Supply
- Filtered Line Level Outputs
- On-Chip Digital De-emphasis for 32, 44.1, and 48 kHz
- 30 mW with 3 V supply
- Popguard® Technology for Control of Clicks and Pops

Description

The CS4340 is a complete stereo digital-to-analog system including digital interpolation, fourth-order delta-sigma digital-to-analog conversion, digital de-emphasis and switched capacitor analog filtering. The advantages of this architecture include: ideal differential linearity, no distortion mechanisms due to resistor matching errors, no linearity drift over time and temperature and a high tolerance to clock jitter.

The CS4340 accepts data at audio sample rates from 2 kHz to 100 kHz, consumes very little power, and operates over a wide power supply range. The features of the CS4340 are ideal for DVD players, CD players, set-top box and automotive systems.

ORDERING INFORMATION

CS4340-KS	16-pin SOIC, -10 to 70 °C
CS4340-BS	16-pin SOIC, -40 to 85 °C
CDB4340	Evaluation Board

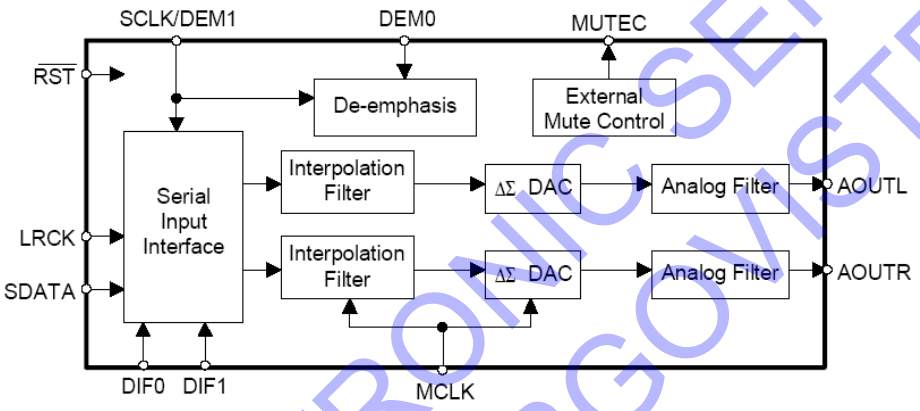

ELECTRONIC SERVICE TIRGOVISTE

13-5-3 MX29LV320CB(Flash Memory) SPEC.

FEATURES

GENERAL FEATURES

- 4,194,304 x 8 / 2,097,152 x 16 switchable
- Sector Structure
  - 8K-Byte x 8 and 64K-Byte x 63
- Extra 64K-Byte sector for security
  - Features factory locked and identifiable, and customer lockable
- Twenty-Four Sector Groups
  - Provides sector group protect function to prevent program or erase operation in the protected sector group
  - Provides chip unprotect function to allow code changing
  - Provides temporary sector group unprotect function for code changing in previously protected sector groups
- Single Power Supply Operation
  - 2.7 to 3.6 volt for read, erase, and program operations
- Latch-up protected to 250mA from -1V to Vcc + 1V
- Low Vcc write inhibit is equal to or less than 1.4V
- Compatible with JEDEC standard
  - Pinout and software compatible to single power supply Flash

PERFORMANCE

- High Performance
  - Fast access time: 70/90/120ns
  - Fast program time: 7us/word typical utilizing accelerate function
  - Fast erase time: 1.6s/sector, 112s/chip (typical)
- Low Power Consumption
  - Low active read current: 10mA (typical) at 5MHz
  - Low standby current: 200nA (typical)
- Minimum 100,000 erase/program cycle
- 10-year data retention

SOFTWARE FEATURES

- Erase Suspend/ Erase Resume
  - Suspends sector erase operation to read data from or program data to another sector which is not being erased
- Status Reply
  - Data polling & Toggle bits provide detection of program and erase operation completion
- Support Common Flash Interface (CFI)

HARDWARE FEATURES

- Ready/Busy (RY/BY) Output
  - Provides a hardware method of detecting program and erase operation completion
- Hardware Reset (RESET) Input
  - Provides a hardware method to reset the internal state machine to read mode
- WP/ACC input pin
  - Provides accelerated program capability

PACKAGE

- 48-Pin TSOP
- 48-Ball CSP

ELECTRONIC SERVICE TIRGOVISTE

13-6 DTV MAIN Chipset (Only for R62F)

13-6-1 CX22496 SPEC.

1. Transport/PES Stream De-Multiplexing
A transport stream is received into the MPEG-2/DVB Transport Stream De-multiplexer. This block contains a DVB common descrambling processor to perform transport or PES payload descrambling. The embedded CPU retrieves ECMs and EMMs from the PSI/SI data and obtains control keys from the EMMs and the smart card interface controller. The CX22491/CX22496 also includes NDS proprietary conditional access gates.After descrambling and error recovery, the Transport Stream De-multiplexer performs transport header parsing, PES header parsing and PSI/SI header parsing and extraction. The PID filters pass through the selected video and audio data, the PCR, as well as up to 36 other user-defined packet streams. The Program Clock Reference is sent to a system timing generator while the other streams are temporarily stored in local memory. Video and Audio streams are automatically detected and sent to the MPEG-2 Video Decoder and MPEG Audio/Dolby Digital Decoder blocks respectively, while user data streams (including teletext and sub-titling) must be taken out of local SDRAM memory by the embedded ARM CPU.A system timing generator uses a single external 14.318MHz crystal and on-chip PLLs to provide all required clock signals for A/V decoding, memory controller, CPU, display controller, audio controller, clock recovery and modem functions.

2. Video DecodingThe MPEG video decoder module decodes MPEG-1 and MPEG-2 MP@ML video bitstreams at bit-rates up to 15Mbit/sec. A range of video picture resolutions are supported including:720x576, 544x576, 480x576, 352x576, 352x288, 720x480, 544x480, 480x480, 352x480, 352x240. Up-sampling to CCIR601 for the low resolution picture modes is implemented using a high performance two dimensional interpolation filter. Error concealment is applied down to the slice level.

3 . Audio Decoding and PCM OutputCX22490/1/6 supports MPEG-1 single channel, dual channel, joint-stereo and stereo modes. MPEG-2 backward compatible bit-streams are also supported at both half and full sample rates. MPEG audio can be decoded with or without de-emphasis.For Dolby Digital bit-streams, the CX22490/1/6 internally decodes 5.1 channels of PCM audio but only the ProLogic encoded, stereo down-mixed pair are provided as outputs

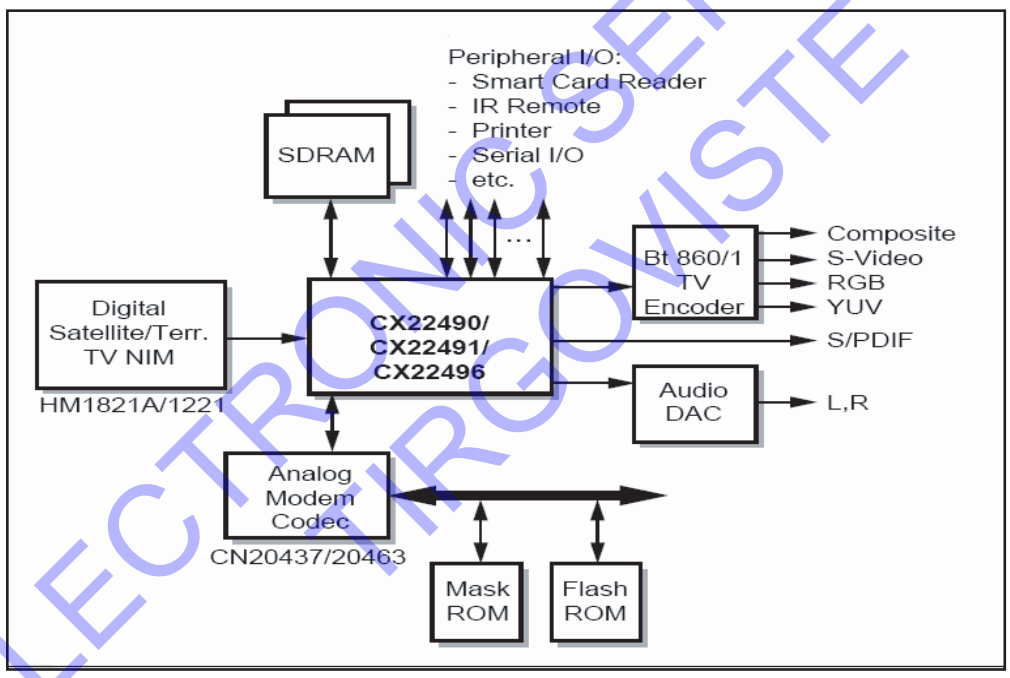

ELECTRONIC SERVICE TIRGOVISTE

13-6-2 UDA4330D(Audio DAC) SPEC.

- Low power consumption
- Power supply voltage from 2.7 to 5.5 V
- Selectable control via L3 microcontroller interface or via static pin control
- System clock frequencies of 256fs , 384fs and 512fs selectable via L3 interface or 256fs and 384fs via static pin control
- Supports sampling frequencies (fs) from 8 to 55 kHz
- Integrated digital filter plus non inverting Digital-to-Analog Converter (DAC)
- No analog post filtering required for DAC
- Slave mode only applications
- Easy application
- Small package size (SSOP16)
- TTL tolerant input pads
- Pin and function compatible with the UDA1320ATS.

Multiple format input interface

- L3 mode: I 2 S-bus, MSB-justified or LSB-justified 16, 18 and 20 bits format compatible
- Static pin mode: I 2 S-bus and LSB-justified 16, 18 and 20 bits format compatible
- 1fs input format data rate.

DAC digital sound processing

- Digital logarithmic volume control in L3 mode
- Digital de-emphasis for 32, 44.1 and 48 kHz sampling frequencies in L3 mode or 44.1 kHz sampling frequency in static pin mode
- Soft mute control both in static pin mode and L3 mode.

Advanced audio configuration

- Stereo line output (volume control in L3 mode)
- High linearity, wide dynamic range and low distortion.

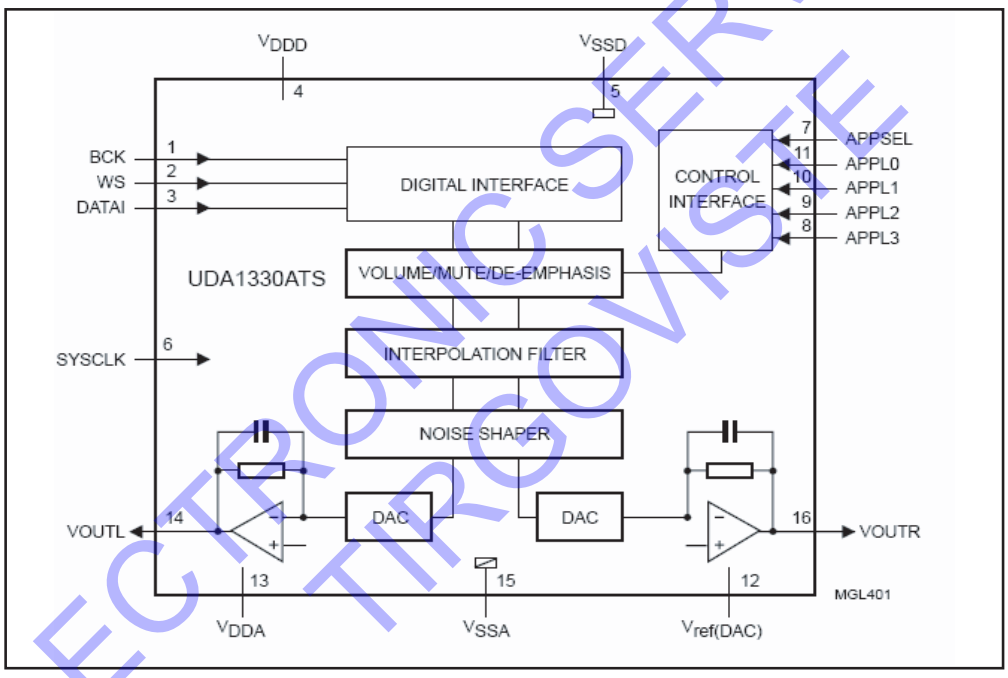

ELECTRONIC SERVICE TIRGOVISTE

SAMSUNG
ELECTRONICS

ELECTRONIC SERVICE
TIRGOVISTE

- This Service Manual is a property of Samsung Electronics Co., Ltd.
Any unauthorized use of Manual can be punished under applicable International and/or domestic law.

Samsung Electronics Co.,Ltd.
416, Maetan-3Dong, Yeongtong-Gu, Suwon City, Gyeonggi-Do, Korea, 443-742
Printed in Korea
P/N : BN82-00139F-00
URL : http://itself.sec.samsung.co.kr/