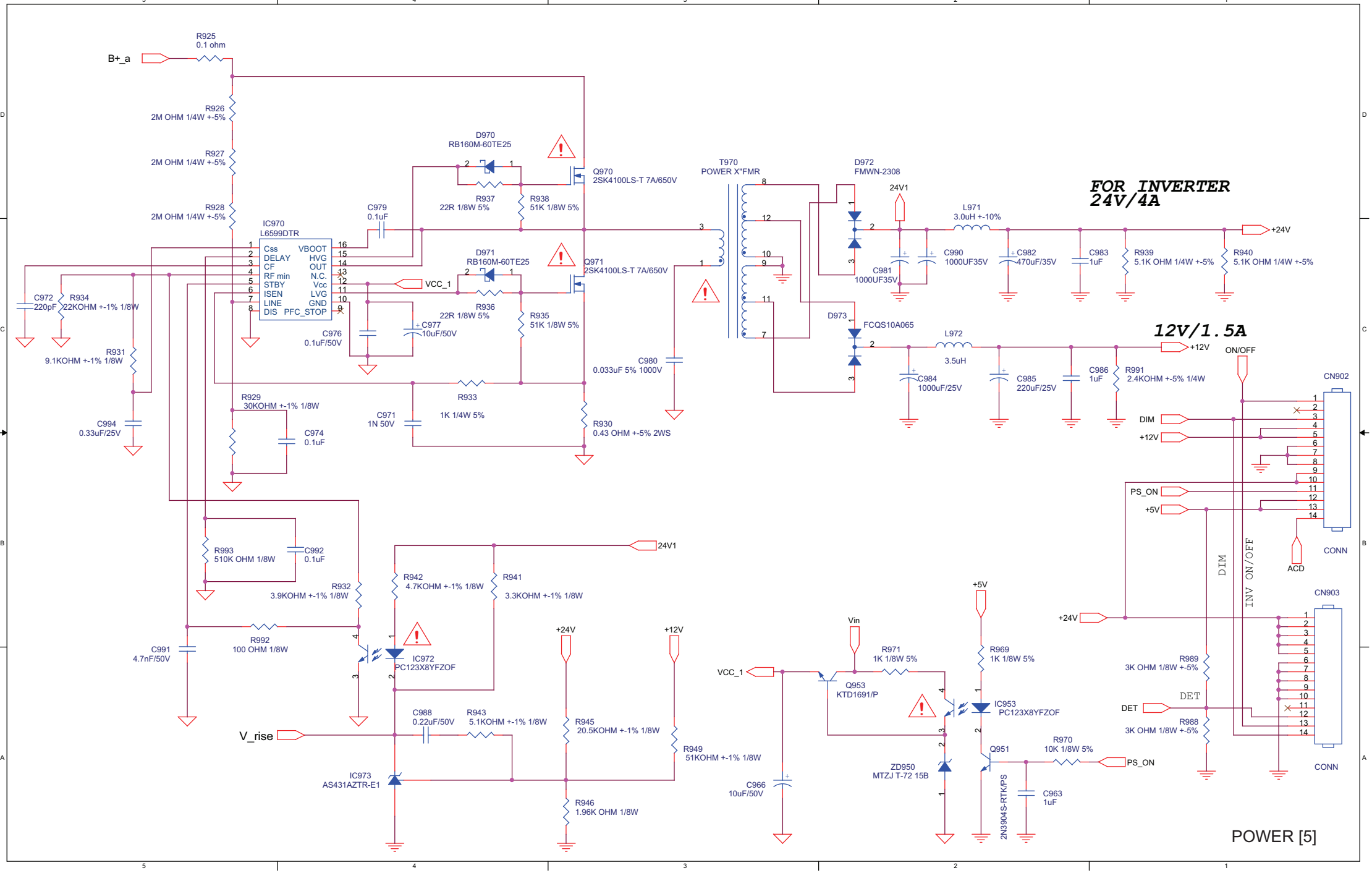
B+_a
R925
0.1 ohm
R926
2M OHM 1/4W +-5%
R927
2M OHM 1/4W +-5%
R928
2M OHM 1/4W +-5%
IC970
L6599DTR
Css
DELAY
CF
RF min
STBY
ISEN
LINE
DIS
VBOOT
HVG
OUT
N.C.
Vcc
LVG
GND
PFC_STOP
C972
220pF
R934
22KOHM +-1% 1/8W
R931
9.1KOHM +-1% 1/8W
C994
0.33uF/25V
C979
0.1uF
D970
RB160M-60TE25
R937
22R 1/8W 5%
R938
51K 1/8W 5%
Q970
2SK4100LS-T 7A/650V
D971
RB160M-60TE25
R936
22R 1/8W 5%
R935
51K 1/8W 5%
Q971
2SK4100LS-T 7A/650V
VCC_1
C976
0.1uF/50V
C977
10uF/50V
C980
0.033uF 5% 1000V
R929
30KOHM +-1% 1/8W
C974
0.1uF
C971
1N 50V
R933
1K 1/4W 5%
R930
0.43 OHM +-5% 2WS
T970
POWER X"FMR
D972
FMWN-2308
24V1
L971
3.0uH +-10%
C981
1000UF35V
C990
1000UF35V
C982
470uF/35V
C983
1uF
R939
5.1K OHM 1/4W +-5%
R940
5.1K OHM 1/4W +-5%
+24V
FOR INVERTER
24V/4A
D973
FCQS10A065
L972
3.5uH
C984
1000uF/25V
C985
220uF/25V
C986
1uF
R991
2.4KOHM +-5% 1/4W
+12V
12V/1.5A
ON/OFF
CN902
DIM
+12V
PS_ON
+5V
ACD
CONN
DIM
INV ON/OFF
CN903
CONN
R993
510K OHM 1/8W
C992
0.1uF
R932
3.9KOHM +-1% 1/8W
R942
4.7KOHM +-1% 1/8W
R941
3.3KOHM +-1% 1/8W
24V1
C991
4.7nF/50V
R992
100 OHM 1/8W
IC972
PC123X8YFZOF
+24V
+12V
V_rise
C988
0.22uF/50V
R943
5.1KOHM +-1% 1/8W
R945
20.5KOHM +-1% 1/8W
R949
51KOHM +-1% 1/8W
IC973
AS431AZTR-E1
R946
1.96K OHM 1/8W
VCC_1
Vin
R971
1K 1/8W 5%
Q953
KTD1691/P
+5V
R969
1K 1/8W 5%
IC953
PC123X8YFZOF
ZD950
MTZJ T-72 15B
C966
10uF/50V
Q951
2N3904S-RTK/PS
R970
10K 1/8W 5%
C963
1uF
PS_ON
+24V
R989
3K OHM 1/8W +-5%
DET
R988
3K OHM 1/8W +-5%
DET
POWER [5]