6.2 电源板

715G2892 2 3

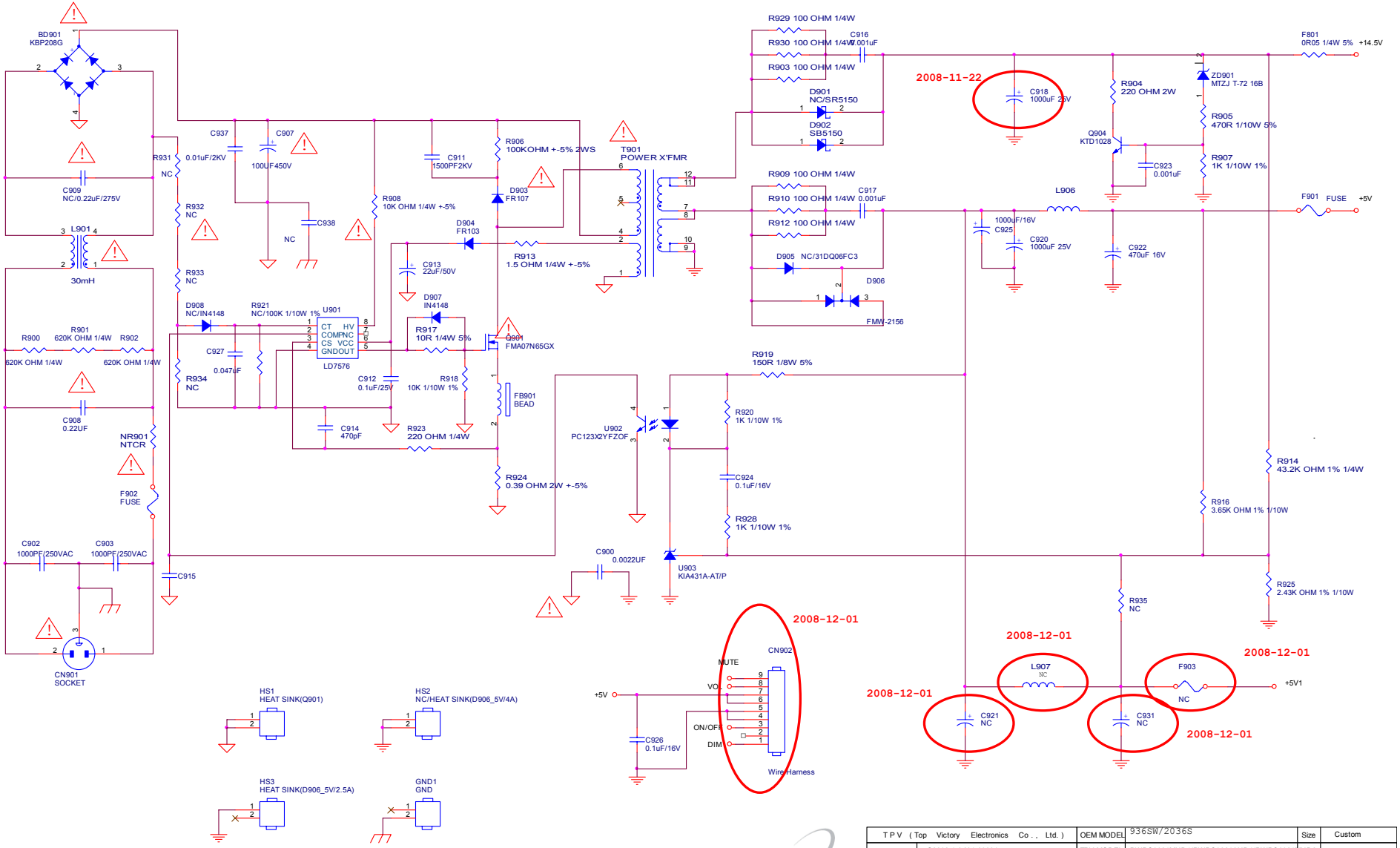

T P V (Top Victory Electronics Co., Ltd.)		OEM MODEL	936SW/2036S	Size	Custom
結構瓜編號	G2892-1-3-X-1-090317	TPV MODEL	PWPC9921MHD1/PWPC9821AHD1/PWPC9921MHD2		1
Key Component	01.POWER	PCB NAME	715G2892-1-3	称案	ODM MODEL
Date	Tuesday, March 17, 2009	Sheet	2 of 3		